City of Portland, Oregon
Bureau of Development Services
Land Use Services
FROM CONCEPT TO CONSTRUCTION

Dan Saltzman, Commissioner
Paul L. Scarlett, Director
Phone: (503) 823-7300
Fax: (503) 823-5630
TTY: (503) 823-6868
www.portlandoregon.gov/bds

Date: January 14, 2013

To: Interested Person

From: Mark Walhood, Land Use Services
503-823-7806 / Mark.Walhood@portlandoregon.gov

NOTICE OF A TYPE II PROPOSAL IN YOUR NEIGHBORHOOD

Development has been proposed in your neighborhood. The proposed development requires a land use review. The proposal, review process, and information on how to respond to this notice are described below. A copy of the site plan and zoning map is attached. I am the staff person handling the case. Please call me if you have questions regarding this proposal. Please contact the applicant if you have questions regarding any future development on the site.

Because we must publish our decision within 28 days, **we need to receive your written comments by 5 p.m. on February 4, 2013**. Please mail or deliver your comments to the address at the bottom of the page, and include the Case File Number, LU 12-205143 AD, in your letter. It also is helpful to address your letter to me, Mark Walhood.

CASE FILE NUMBER: LU 12-205143 AD – 1224 SW HESSLER OUTDOOR FIREPLACE

Applicant: Mike Montgomery (503) 515-6495
Simpl Home Designs
5531 SW Buddington St.
Portland, OR 97219

Property Owner: Clark R. Nye
1224 SW Hessler Dr
Portland, OR 97239

Site Address: 1224 SW HESSLER DR

Legal Description: LOT 30, HESSLER HILLS
Tax Account No.: R380800980
State ID No.: 1S1E16AB 01600
Quarter Section: 3527, 3528

Neighborhood: Hillsdale, contact Duane Hunting at 503-245-7998.
Business District: None
District Coalition: Southwest Neighborhoods Inc., contact Leonard Gard at 503-823-4592.

Zoning: **R10** (Single-Dwelling Residential 10,000)

Case Type: **AD** (Adjustment Review)
Procedure: **Type II**, an administrative decision with appeal to the Adjustment Committee.

PROPOSAL: The applicant has proposed the construction of a detached outdoor fireplace structure in the rear/side yard of the home at 1224 SW Hessler Drive. The structure is proposed just behind the house from the street, near the south side lot line near an existing outdoor spa and terrace. The fireplace would have natural gas firebox and metal flue in a concrete structure with open shelving and brick details. The footprint of the fireplace is 12'-5" by 6'-7", sited with the long side facing the south side lot line, and measure 6'-11" tall not counting the metal flue which rises another 0'-8" above the main structure (7'-7" tall at top of flue).

Regulations of the R10 zone require a 10'-0" minimum building setback for the fireplace structure from the side and rear lot lines (33.110.220.B). As proposed, the fireplace would be located 0'-6" from the south side lot line. Therefore, the applicant has requested an Adjustment to reduce the south side setback from 10'-0" to 0'-6", in order to construct the outdoor fireplace shown on the attached drawings.

RELEVANT APPROVAL CRITERIA: In order to be approved, this proposal must comply with the approval criteria of Title 33. The relevant criteria are found at **33.805.040.A-F, Adjustment Approval Criteria**.

Zoning Code Section *33.700.080* states that Land Use Review applications are reviewed under the regulations in effect at the time the application was submitted, provided that the application is complete at the time of submittal, or complete within 180 days. This application was submitted on November 14, 2012 and determined to be complete on January 9, 2013.

DECISION MAKING PROCESS
The Bureau of Development Services will make a decision on this proposal.
We will consider your comments, and

- Approve the proposal.
- Approve the proposal with conditions.
- Deny the proposal.

The neighborhood association listed on the first page of this notice may take a position on this application. They may also schedule an open meeting prior to making their recommendation to the Bureau of Development Services. Please contact the person listed as the neighborhood contact to determine the time and date of this meeting.

ORS 227.178 states the City must issue a final decision on Land Use Review applications within 120-days of the application being deemed complete. The 120-day review period may be extended at the request of the applicant.

The file and all evidence on this case are available for your review by appointment only. Please call the Request Line at our office, 1900 SW Fourth Avenue, Suite 5000, phone 503-823-7617, to schedule an appointment. I can provide some information over the phone. Copies of all information in the file can be obtained for a fee equal to the cost of services. Additional information about the City of Portland, city bureaus, and a digital copy of the Portland Zoning Code is available on the internet at www.portlandonline.com.

APPEAL PROCESS
If you disagree with the Bureau of Development Services administrative decision, you can appeal the decision to the Adjustment Committee. This review body will hold a public hearing for the appeal. When the decision is mailed, the criteria used to make the decision and information on how to file an appeal will be included. If you do not send any comments, you can still appeal the decision. There is a 14-day deadline to file an appeal beginning on the day the decision is mailed. The reason for the appeal must be specifically defined in order for the

review body to respond to the appeal. If an appeal is filed, you will be notified of the time and location of the appeal hearing.

There is a fee charged for appeals. Recognized neighborhood associations may qualify for an appeal fee waiver.

APPEAL OF THE FINAL CITY DECISION

After an appeal hearing, the review body decision may be appealed to the Oregon Land Use Board of Appeals (LUBA) at 550 Capitol St. NE, Suite 235, Salem, OR 97301. The phone number for LUBA is 1-503-373-1265. Issues that may provide the basis for an appeal to LUBA must be raised prior to the comment deadline or prior to the conclusion of the hearing if a local appeal is requested. If you do not raise an issue with enough specificity to give the Bureau of Development Services an opportunity to respond to it, that may also preclude an appeal to LUBA on that issue.

The Bureau of Development Services is committed to providing equal access to information and hearings. Please notify us no less than five business days prior to the event if you need special accommodations. Call 503-823-7300 (TTY 503-823-6868).

Enclosures:
Zoning Map
Site Plan
Elevations

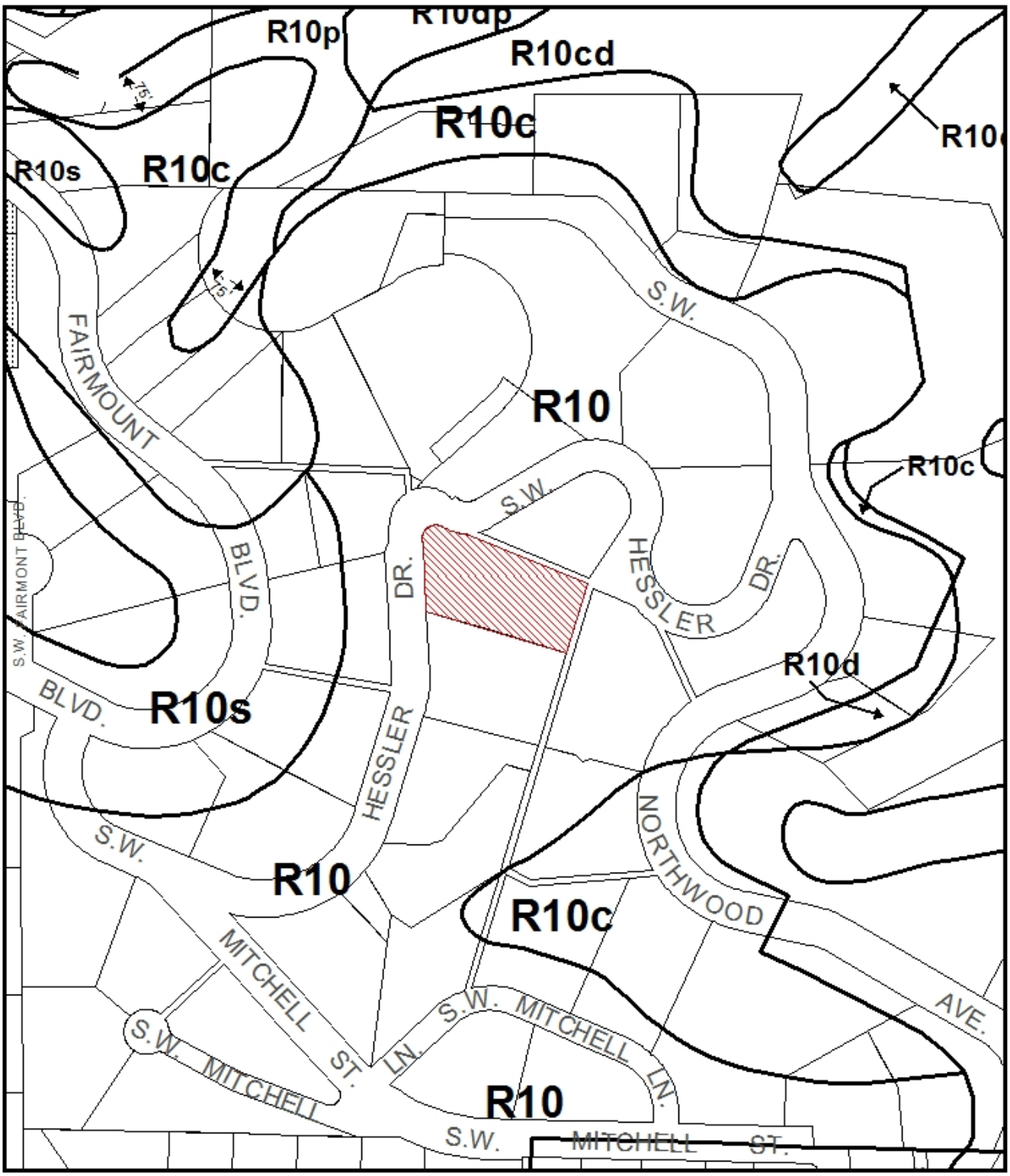

ZONING

Site

File No.	LU 12-205143 AD
1/4 Section	3527,3528
Scale	1 inch = 200 feet
State_Id	1S1E16AB 1600
Exhibit	B (Nov 15,2012)

NORTH

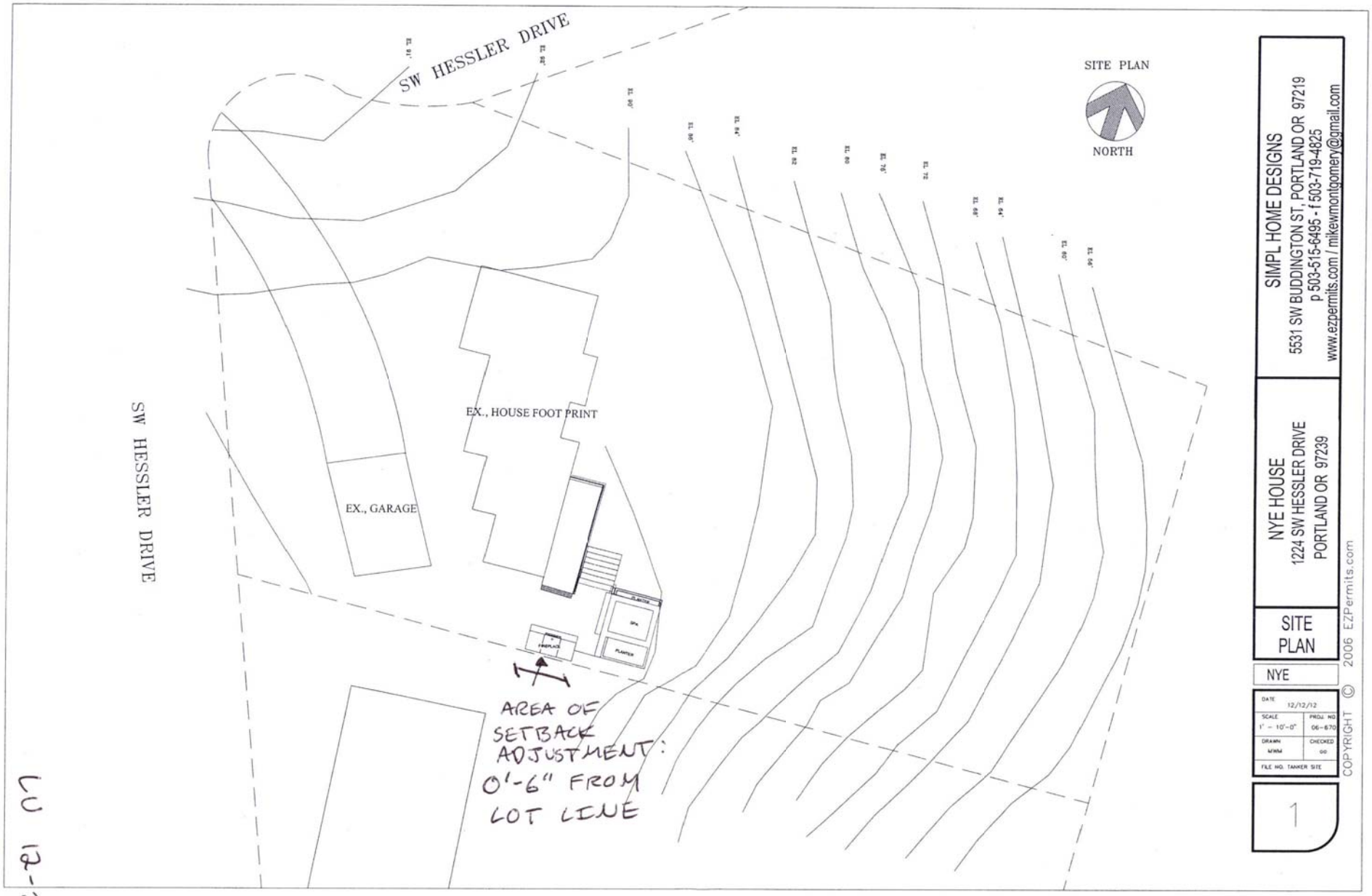

LU 12-205143 AD

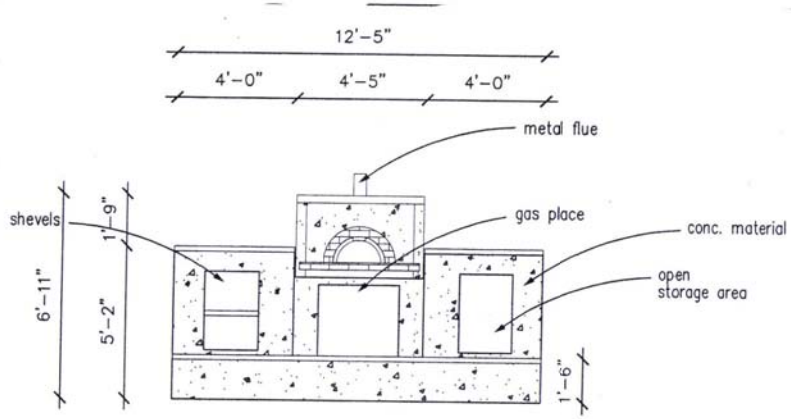

FRONT ELEVATION VIEW

1/4"=1'-0"

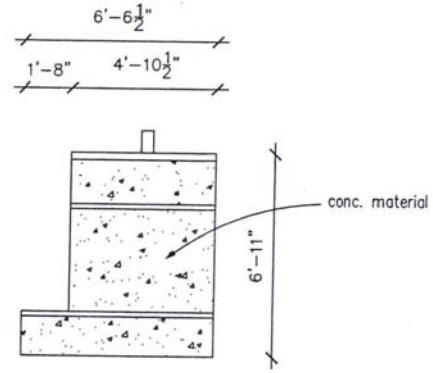

SIDE ELEVATION VIEW

1/4"=1'-0"

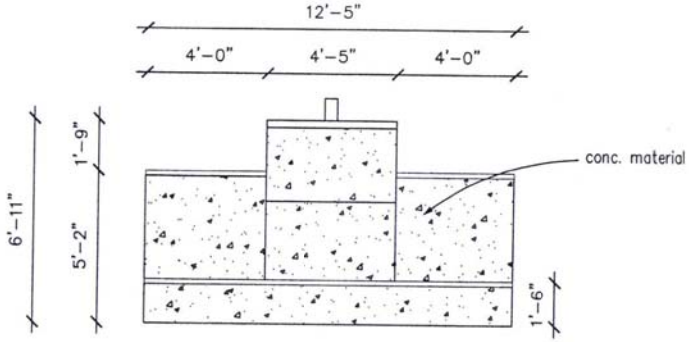

REAR ELEVATION VIEW

1/4"=1'-0"

503.515.6495 OFFICE
5531 SW Buddington Street
Portland OR 97219
mikemontgomery@gmail.com

Drafting & Design
Custom Plans
Remodels
Site plans
Permit Management

Robert Nye
1224 SW Hessler Dr.
Portland, OR 97239

ELEVATION PLAN(s)

DATE 06/01/12	
SCALE 1/4" = 1'-0"	PROJ. NO 00
DRAWN mwm	CHECKED jp

A1.0

1 of 1

COPYRIGHT © 2006 EZPermits.com

W 12-205143 AD