City of Portland, Oregon
Bureau of Development Services
Land Use Services
FROM CONCEPT TO CONSTRUCTION

Dan Saltzman, Commissioner
Paul L. Scarlett, Director
Phone: (503) 823-7300
Fax: (503) 823-5630
TTY: (503) 823-6868
www.portlandoregon.gov/bds

Date: December 9, 2011

To: Interested Person

From: Staci Monroe, Land Use Services
503-823-0624 / staci.monroe@portlandoregon.gov

NOTICE OF A TYPE II PROPOSAL IN YOUR NEIGHBORHOOD

Development has been proposed in your neighborhood. The proposed development requires a land use review. The proposal, review process, and information on how to respond to this notice are described below. A copy of the site plan and zoning map is attached. I am the staff person handling the case. Please call me if you have questions regarding this proposal. Please contact the applicant if you have questions regarding any future development on the site.

Because we must publish our decision within 28 days, **we need to receive your written comments by 5 p.m. on December 30, 2011**. Please mail or deliver your comments to the address at the bottom of the page, and include the Case File Number, LU 11-192818 HDZ, in your letter. It also is helpful to address your letter to me, Staci Monroe.

CASE FILE NUMBER: LU 11-192818 HDZ – SOLAR PHOTOVOLATIC AWNING

Applicant: Foster/Killingsworth LLC (owner)
415 N. Killingsworth Street
Portland, OR 97217

Representative: Jonathan Cohen, 503-477-9585
Imagine Energy
439 N. Broadway Street
Portland, OR 97227

Site Address: 415 N KILLINGSWORTH STREET

Legal Description: BLOCK 9 LOT 1&2, PIEDMONT
Tax Account No.: R657801170
State ID No.: 1N1E15DC 16400
Quarter Section: 2430
Neighborhood: Humboldt, contact Brian Murtagh at 503-962-9194.
Business District: North Portland Business Assoc, contact Jim Schaller at 503-517-9915.North-Northeast Business Assoc, contact Joice Taylor at 503-445-1321.
District Coalition: Northeast Coalition of Neighborhoods, contact Shoshana Cohen at 503-823-4575.
Plan District: None
Other Designations: Piedmont Conservation District
Zoning: CS – Storefront Commercial zone with a Historic Resource Protection Overlay zone
Case Type: HDZ – Historic Design Review

Procedure: Type II, an administrative decision with appeal to the Landmarks Commission.

Proposal:
The applicant seeks a Historic Design Review to replace a fabric retractable awning on the upper facade of the subject building with a solar photovoltaic awning in the Piedmont Conservation District. The panels will be attached at the upper fascia that sits above the 2nd floor windows and below the top of the parapet. The panel awning will extend across the entire front (south) building facade and project approximately 4.5' from the building.

An exterior alteration to a building in a conservation district (Piedmont) that cannot meet the Community Design Standards of Section 33.218.140 requires Historic Design Review.

Relevant Approval Criteria:
In order to be approved, this proposal must comply with the approval criteria of Title 33 of the Portland Zoning Code. The relevant criteria are:

- Community Design Guidelines

Zoning Code Section *33.700.080* states that Land Use Review applications are reviewed under the regulations in effect at the time the application was submitted, provided that the application is complete at the time of submittal, or complete within 180 days. This application was submitted on November 10, 2011 and determined to be complete on **December 7, 2011**.

DECISION MAKING PROCESS
The Bureau of Development Services will make a decision on this proposal.
We will consider your comments, and

- Approve the proposal.
- Approve the proposal with conditions.
- Deny the proposal.

The neighborhood association listed on the first page of this notice may take a position on this application. They may also schedule an open meeting prior to making their recommendation to the Bureau of Development Services. Please contact the person listed as the neighborhood contact to determine the time and date of this meeting.

ORS 227.178 states the City must issue a final decision on Land Use Review applications within 120-days of the application being deemed complete. The 120-day review period may be extended at the request of the applicant.

The file and all evidence on this case are available for your review by appointment only. Please call the Request Line at our office, 1900 SW Fourth Avenue, Suite 5000, phone 503-823-7617, to schedule an appointment. I can provide some information over the phone. Copies of all information in the file can be obtained for a fee equal to the cost of services. Additional information about the City of Portland, city bureaus, and a digital copy of the Portland Zoning Code is available on the internet at www.portlandonline.com.

APPEAL PROCESS
If you disagree with the Bureau of Development Services administrative decision, you can appeal the decision to the Landmarks Commission. This review body will hold a public hearing for the appeal. When the decision is mailed, the criteria used to make the decision and information on how to file an appeal will be included. If you do not send any comments, you can still appeal the decision. There is a 14-day deadline to file an appeal beginning on the day the decision is mailed. The reason for the appeal must be specifically defined in order for the

review body to respond to the appeal. If an appeal is filed, you will be notified of the time and location of the appeal hearing.

There is a fee charged for appeals. Recognized neighborhood associations may qualify for an appeal fee waiver.

APPEAL OF THE FINAL CITY DECISION

After an appeal hearing, the review body decision may be appealed to the Oregon Land Use Board of Appeals (LUBA) at 550 Capitol St. NE, Suite 235, Salem, OR 97301. The phone number for LUBA is 1-503-373-1265. Issues that may provide the basis for an appeal to LUBA must be raised prior to the comment deadline or prior to the conclusion of the hearing if a local appeal is requested. If you do not raise an issue with enough specificity to give the Bureau of Development Services an opportunity to respond to it, that may also preclude an appeal to LUBA on that issue.

The Bureau of Development Services is committed to providing equal access to information and hearings. Please notify us no less than five business days prior to the event if you need special accommodations. Call 503-823-7300 (TTY 503-823-6868).

Enclosures:
Zoning Map
Site Plan
Building Elevation & Awning Detail

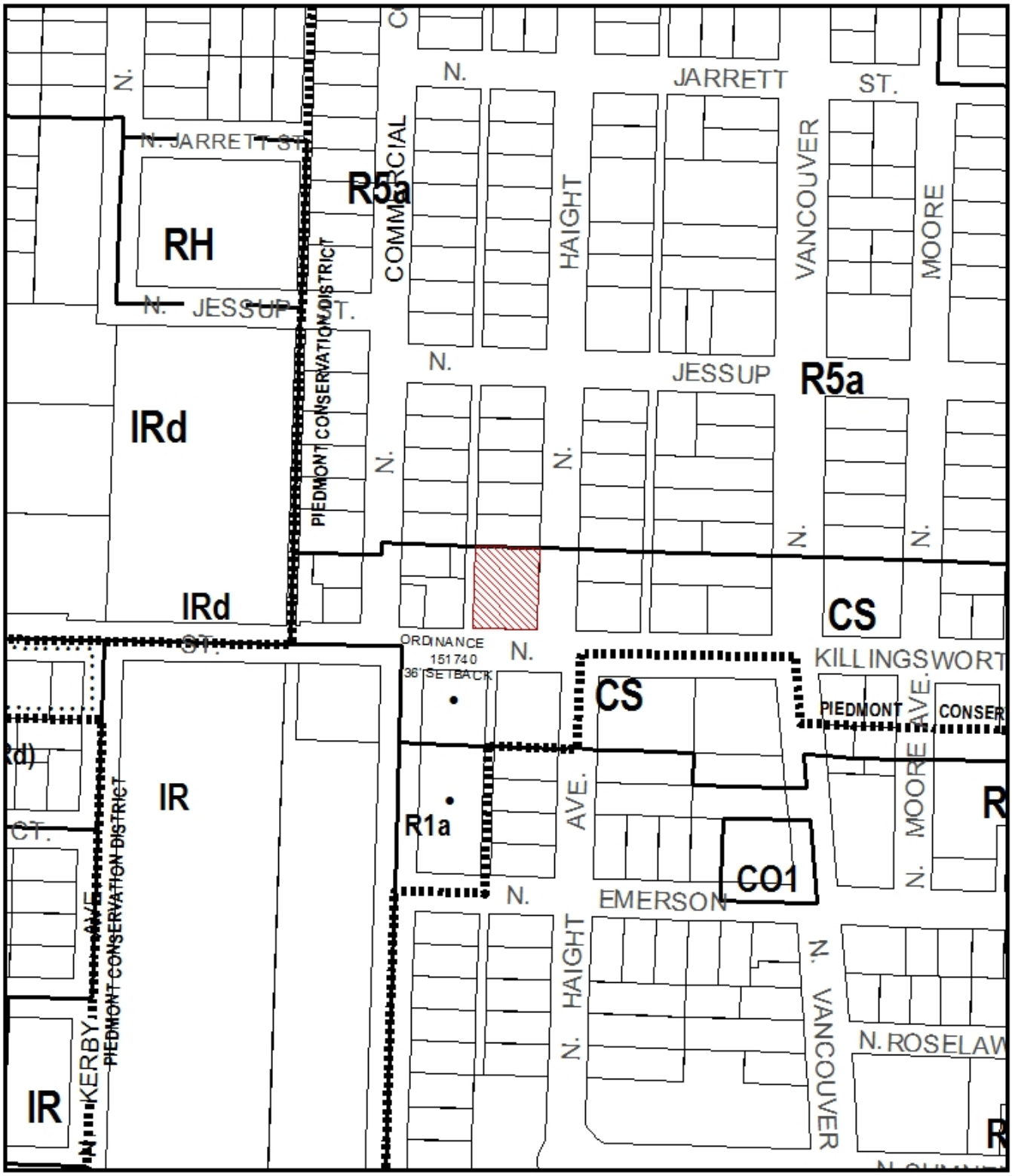

ZONING

Site

Historic Landmark

NORTH

This site lies within the:
PIEDMONT CONSERVATION DISTRICT

File No.	LU 11-192818 HDZ
1/4 Section	2430
Scale	1 inch = 200 feet
State_Id	1N1E15DC 16400
Exhibit	B (Nov 15,2011)

Un 11-19288 HDZ

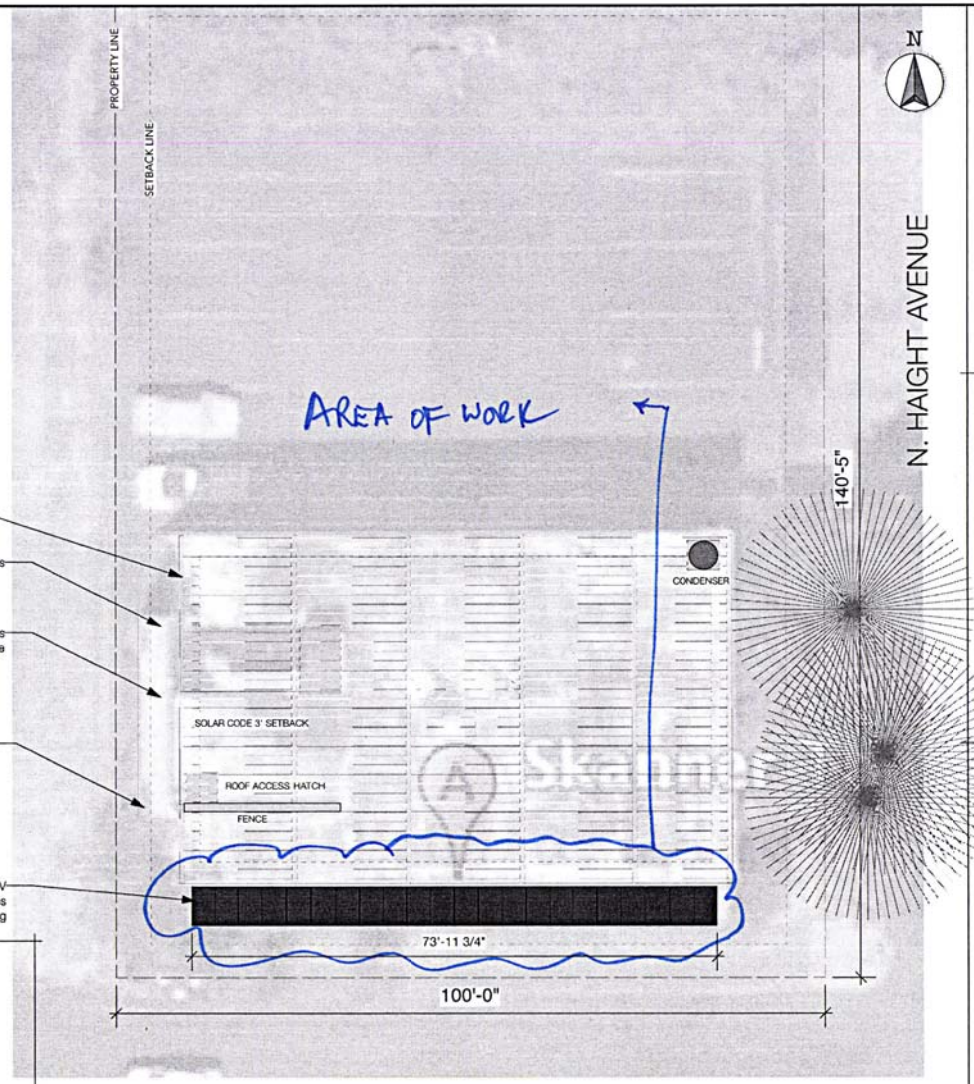

Array setback 3' from roof per Oregon Specialty Solar Code
Array < 1000 s.f., but roof < 2/12 pitch

Stairs to 2nd floor and roof access

Inverters in closet under stairs. Access from inside

PPL CT meter inside electrical room. Disconnect within 10' of meter inside electrical room.

2 Strings of 11 Solarworld 235W PV Modules
30 degrees mounted as an awning

ARRAY SPECIFICATIONS

(22) SOLARWORLD 235W PV MODULES
SMA 5000W INVERTER
CONERGY SUNTOP RACKING

30° TILT
180° AZIMUTH

PSF = TBD
TOF = 1.0
TSRF = TBD

ROOF SPECIFICATIONS

PVC

1 LAYERS
NEW

0° PITCH
180° ORIENTATION

SITE PLAN

DRAWN BY
JONATHAN COHEN

SHEET NUMBER 1 | TOTAL SHEETS 2

REVISION	REASON	INITIALS	DATE
01	ADDED MODULES	JPC	08/15/2011
02	SOLARWORLD + SOLYNDRA MODS	JPC	08/24/2011
03	SOLARWORLD ONLY, WIND TURB.	JPC	09/13/2011
04	10kW SOLARWORLD ONLY	JPC	10/16/11

DRAWN ON
06/13/2011

SCALE
1/16" = 1'

THE SKANNER

PROJECT DESCRIPTION
SOLAR PV SYSTEM

PROJECT ADDRESS
BERNIE FOSTER
415 N. KILLINGSWORTH STREET
PORTLAND, OR 97217

CONTACT INFORMATION
H 503.285.5555
E: INFO@THESKANNER.COM

IMAGINENERGY
439 N BROADWAY ST
PORTLAND, OR 97227
P 503.477.9585 F 503.477.8340
INFO@IMAGINEENERGY.NET
CCB #: 167963
WA LIC #: IMAGIEL934PT

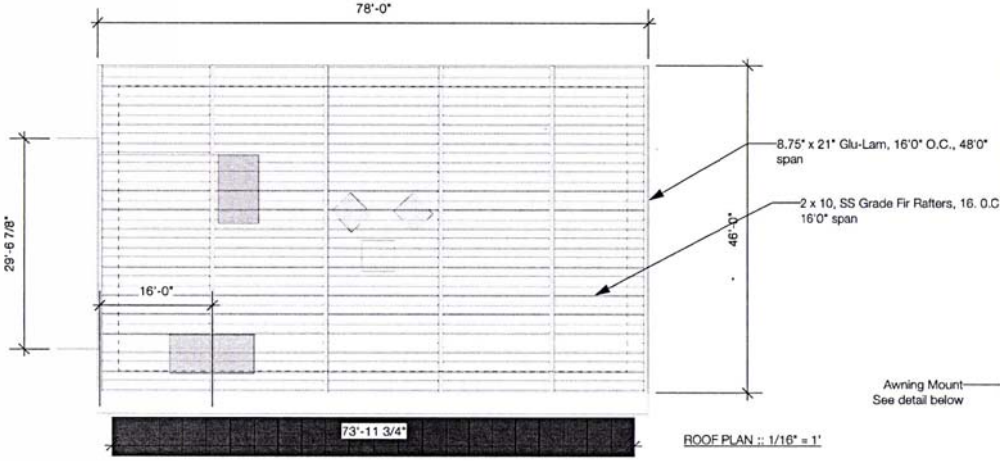

ROOF PLAN :: 1/16" = 1'

BUILDING FACADE

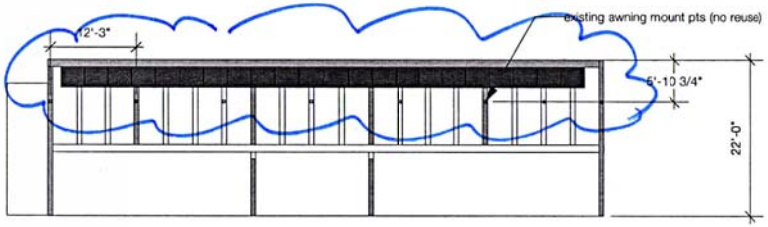

FRONT ELEVATION :: 1/16" =1'

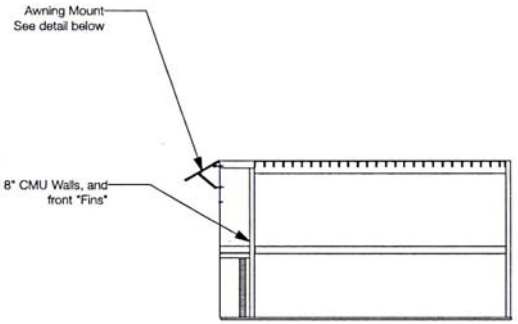

EAST ELEVATION :: 1/16" = 1'

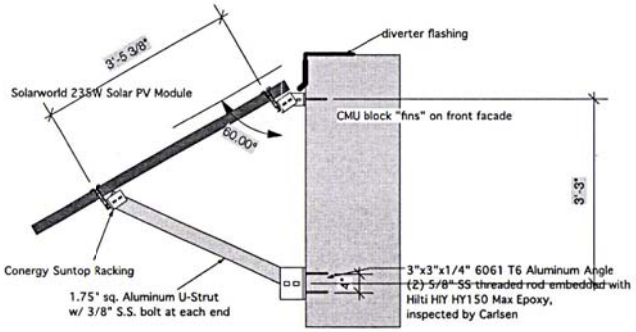

AWNING DETAIL
SCALE: 1/2" = 1'

→ AREA OF WORK

UN 11-19 2018 HOZ

IMAGINENERGY
439 N BROADWAY ST
PORTLAND, OR 97227
P 503.477.9585 F 503.477.8340
INFO@IMAGINEENERGY.NET
CCB #: 167963
WA LIC #: IMAGIEL934PT

THE SKANNER
PROJECT DESCRIPTION
SOLAR PV SYSTEM
PROJECT ADDRESS
BERNIE FOSTER
415 N. KILLINGSWORTH STREET
PORTLAND, OR 97217
CONTACT INFORMATION
H 503.285.5555
E: INFO@THESKANNER.COM

MOUNTING DETAILS
DRAWN BY
JONATHAN COHEN
SHEET NUMBER 2 | TOTAL SHEETS 2
DRAWN ON 09/13/2011
SCALE SEE SHEET
REVISION 01 | REASON REVISED AWNING MOUNTING | INITIALS JPC | DATE 10/17/11