Appendix G.3 Table of Contents

SWALES

SW-300 – Plan View
SW-301 – Section Views
SW-302 – Street Tree Detail
SW-303 – Landscape Planting Templates
SW-304 – Meter & Hydrant Locations

PLANTERS

SW-310 – Plan View without Parking
SW-311 – Plan View with Parking
SW-312 – Section Views
SW-313 – Planter Wall Details
SW-314 – Street Tree Detail
SW-315 – Landscape Planting Templates
SW-316 – Meter & Hydrant Locations

CURB EXTENSIONS

SW-320 – In-Street Plan View
SW-321 – In-Planting-Strip Plan View
SW-322 – Section Views
SW-323 – Landscape Planting Templates
SW-324 – Meter & Hydrant Locations

CURB INLETS

SW-330 – Concrete Inlet with Wingwalls
SW-331 – Concrete Inlet
SW-332 – Metal Inlet Splash Pad Alternatives
SW-333 – Inlet & Outlet for Curb Extensions
SW-334 – Modified Metal Inlet Assembly
SW-335 – Channel & Grate Details
SW-336 – Grate & Frame Details

CHECK DAMS

SW-340 – Rock Check Dam for Swales
SW-341 – Wooden Check Dam for Swales
SW-342 – Wooden Check Dam for Planters
SW-343 – Concrete Check Dam for Planters

OVERFLOW INLETS

SW-350 – Atrium Grate
SW-351 – Overflow Drain

MISCELLANEOUS

SW-360 – Liner Attachment & Pipe Boot Details

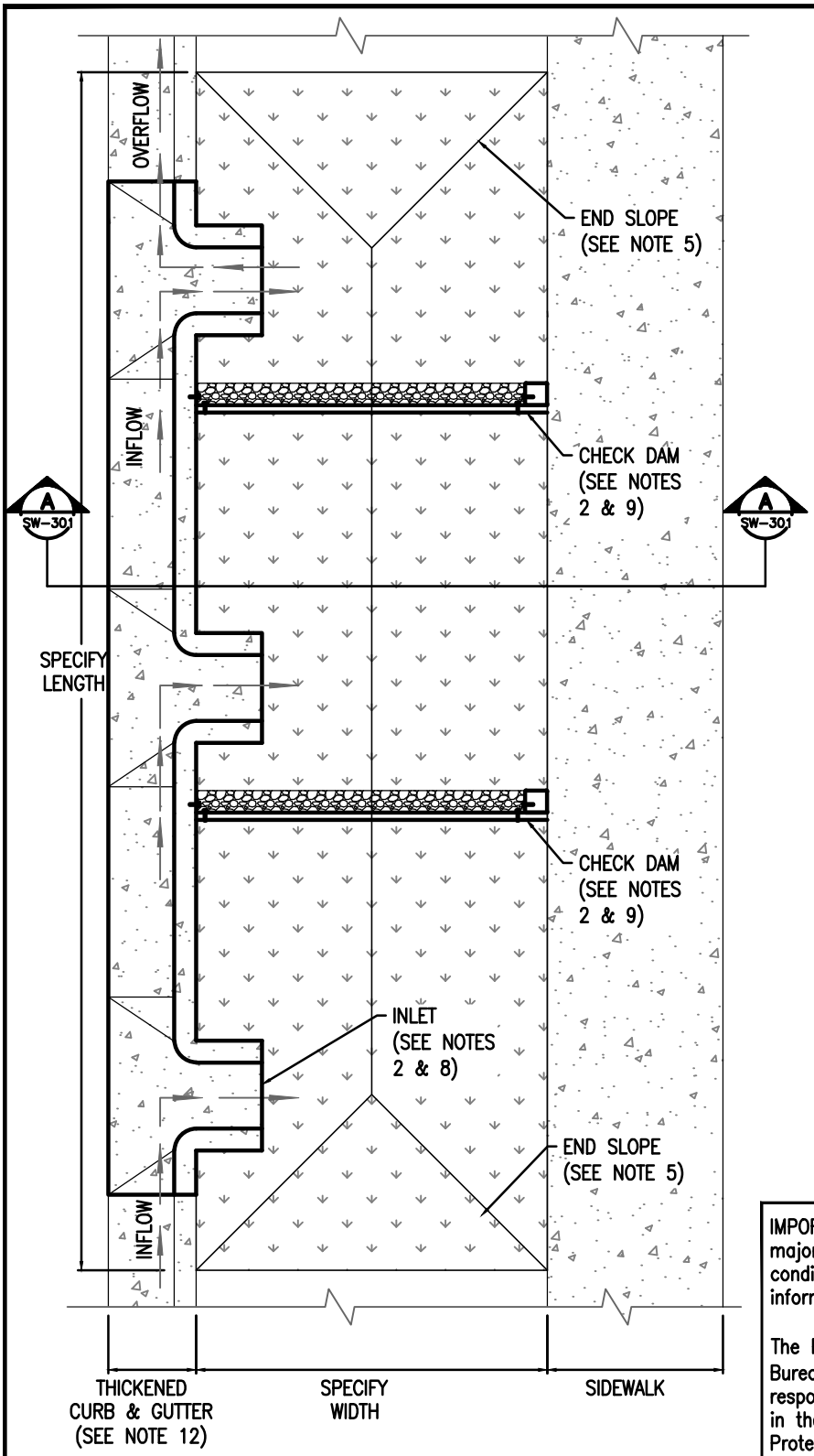

PLAN VIEW

- DRAWING NOT TO SCALE -

DESIGNER INFORMATION:

1. Adapt this plan view example to your engineered design. Maximize surface storage.
2. Provide beginning and ending stations for each facility. Provide stationing and/or dimensions and elevations at each inlet, outlet and check dam.
3. Sidewalk elevation must be set above check dam and inlet elevations to allow overflow to drain to street before sidewalk.
4. Existing utility lines must be sleeved or relocated. Proposed utility lines to be located out of facility.
5. End slopes 1:4. See swale sections on SW-301 for side slopes.
6. Longitudinal slope of swale matches the road.
7. Area and Depth of facility are based upon engineering calculations and right-of-way constraints. See chapter 2 of the City of Portland Stormwater Management Manual (SWMM).

RELATED DETAILS AND RESOURCES:

8. Concrete Inlet detail SW-300
9. Check Dam details SW-340 and SW-341
10. Special requirements for water lines, meters, and fire hydrants (see SW-304)
11. Swale Planting Template (see SW-303)
12. Thickened Curb and Gutter per PBOT standard drawing P-540
13. Stormwater facility construction and topsoil requirements see City of Portland Standard Construction Specifications, sections 00415 and 01040.14(d)

IMPORTANT: Utility conflicts and existing conditions can create major design variables. Locate utilities and survey existing conditions prior to beginning design work and include information on design drawings.

The Portland Bureau of Transportation (PBOT), Portland Water Bureau (PWB), and Bureau of Environmental Services (BES) are responsible for the review and approval of Stormwater Swales in the public right of way. Stormwater facilities in Wellhead Protection Areas may require special containment measures as required by City Code 21.35.

For more information contact:

PBOT	(503) 823-7884	BES	(503) 823-7761
PWB	(503) 823-7368	Urban Forestry	(503) 823-4489

STORMWATER MANAGEMENT MANUAL TYPICAL DETAILS

- Green Streets -

Plan View

Swales

Bureau of Environmental Services

NUMBER

SW-300

– NO PARKING –

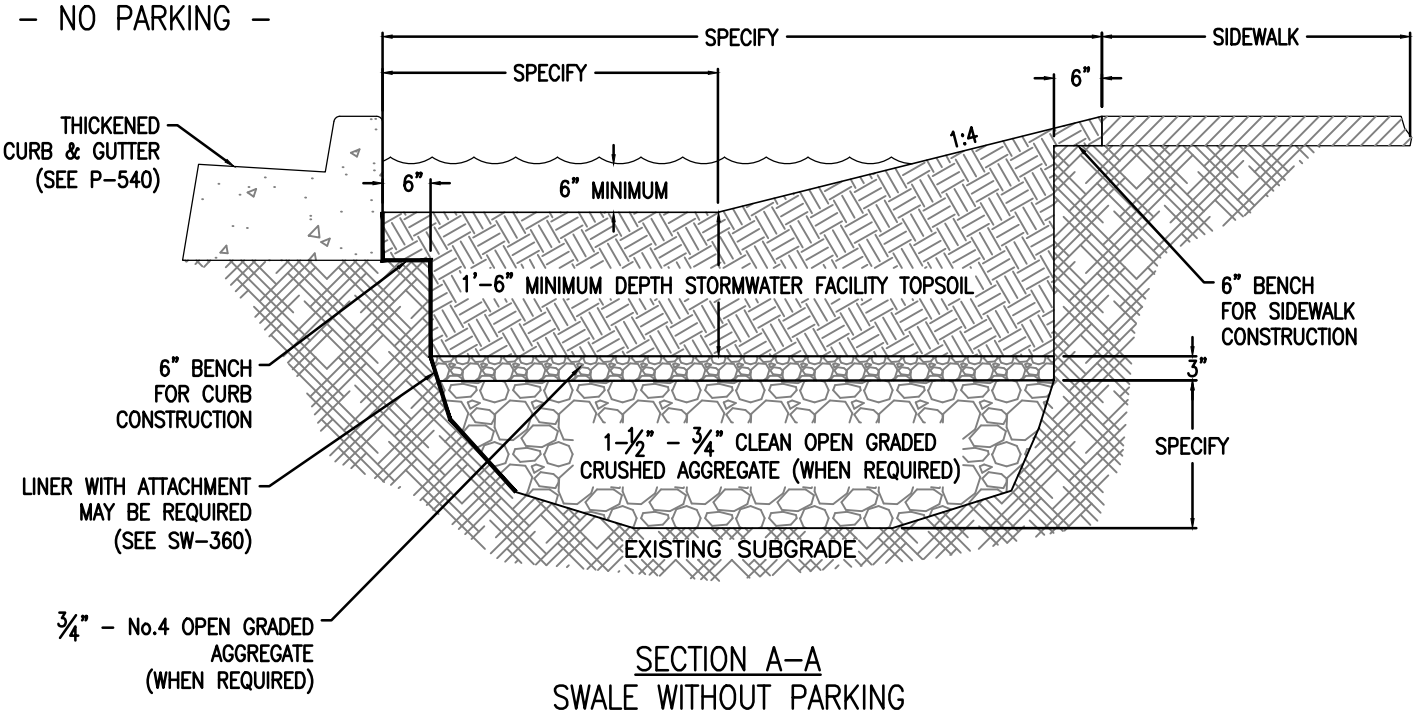

SECTION A–A
SWALE WITHOUT PARKING

– PARKING –

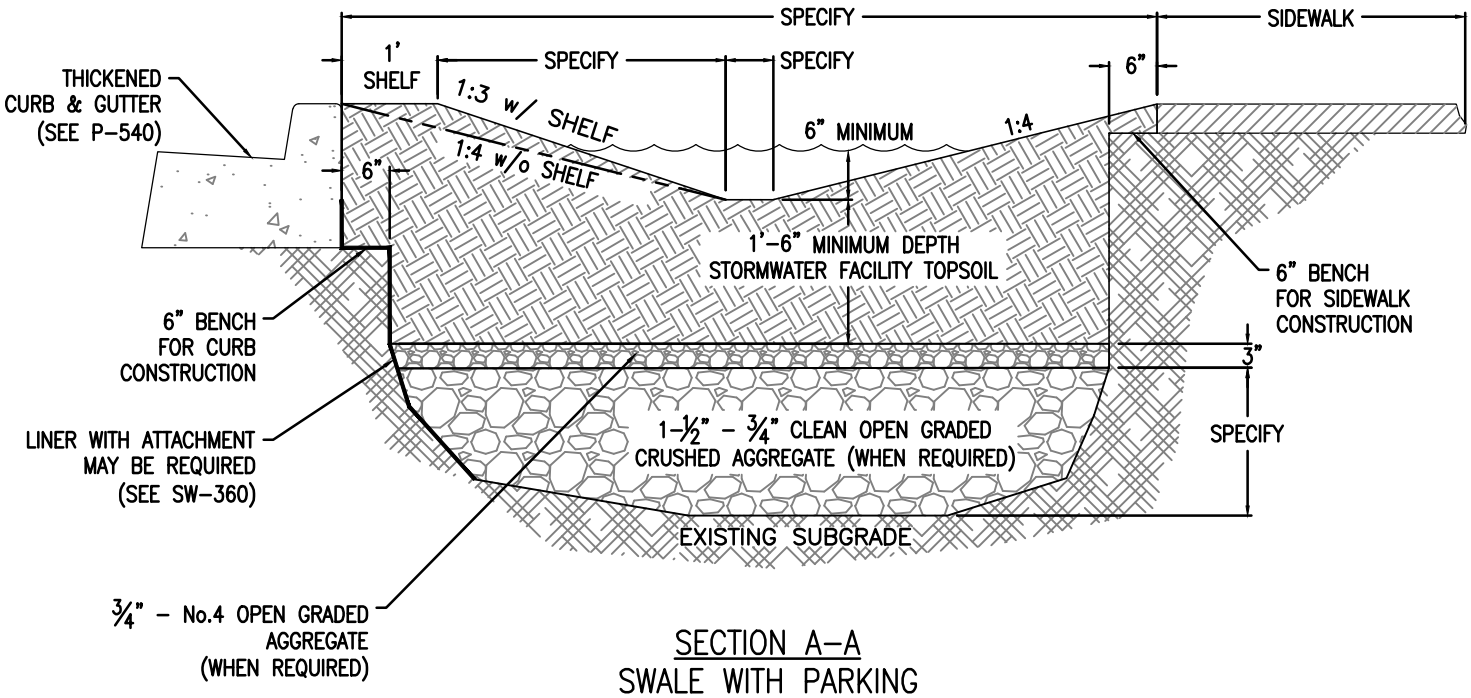

SECTION A–A
SWALE WITH PARKING

DESIGNER INFORMATION:

See SW-300 for Inlet

CONSTRUCTION NOTE:

Scarify the native soil following the initial excavation and before installing topsoil or rock.

FOR PLAN VIEW SEE SW-310

– DRAWING NOT TO SCALE –

STORMWATER MANAGEMENT MANUAL TYPICAL DETAILS

– Green Streets –

Section Views

Swales

Bureau of Environmental Services

NUMBER

SW-301

STREET TREES	
Botanical Name	Common Name
WITH power lines	
Carpinus caroliniana	American Hornbeam
Fraxinus pennsylvanica 'Johnson'	Leprechaun Ash
Gleditsia triacanthos 'Impcole'	Imperial Honeylocust
Koelreuteria paniculata	Goldenrain Tree
Prunus virginiana "Canada Red'	Canada Red Chokecherry
WITHOUT power lines	
Nyssa sylvatica	Black Tupelo
Celtis occidentalis	Hackberry
Quercus shumardii	Shumard Oak
Betula jacquemontii	Jacquemontii Birch
Acer campestre 'Evelyn'	Queen Elizabeth Hedge Maple
Gleditsia triacanthos 'Skycole'	Skyline Honeylocust

TABLE 1

DESIGNER INFORMATION:

1. Distance between trees varies: 20ft–30ft on center.
2. Stormwater facility construction and topsoil requirements, see City of Portland Standard Construction Specifications sections 00415 and 01040.14(d).
3. Street Tree list provided for reference do not include on plans. Use of tree species not on list must be approved by Urban Forestry 503–823–4489.
4. Include Tree Well and Street Tree views on plans.
5. Dimension topsoil and rock layers on non–tree side to correspond to Swale Section.
6. Include liner and call–out if used, see Swale Section SW–301.

CONSTRUCTION NOTES:

1. Contact Urban Forestry for tree installation assistance and permitting at (503) 823–4489.
2. Remove wire and burlap from root ball prior to backfilling.
3. Set top of root ball 1" –2" above topsoil surface.
4. Deepen soil section minimum; 4ft wide, 6ft long, 4ft deep.

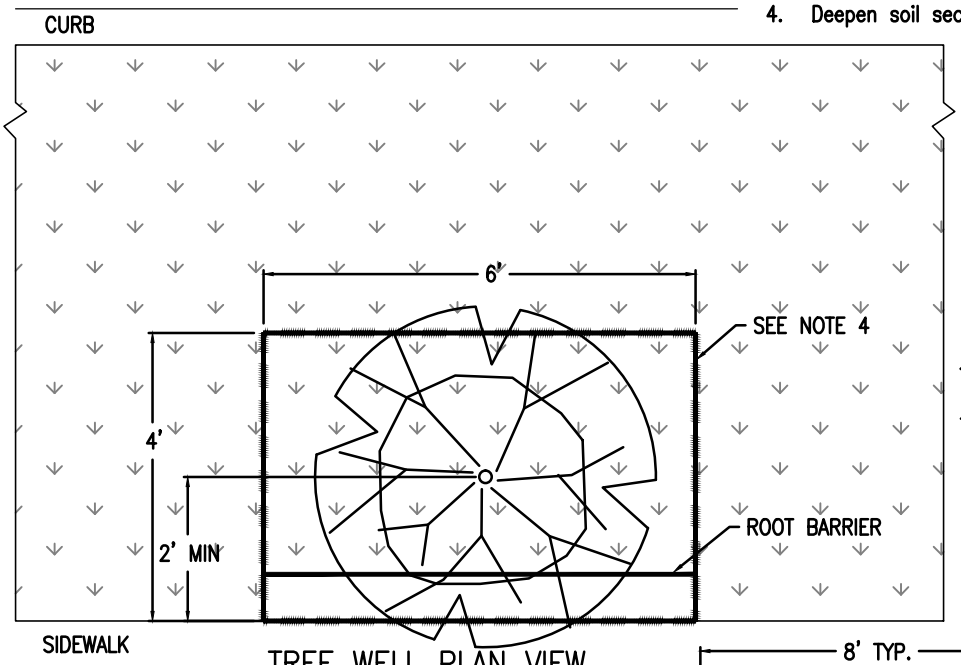

TREE WELL PLAN VIEW

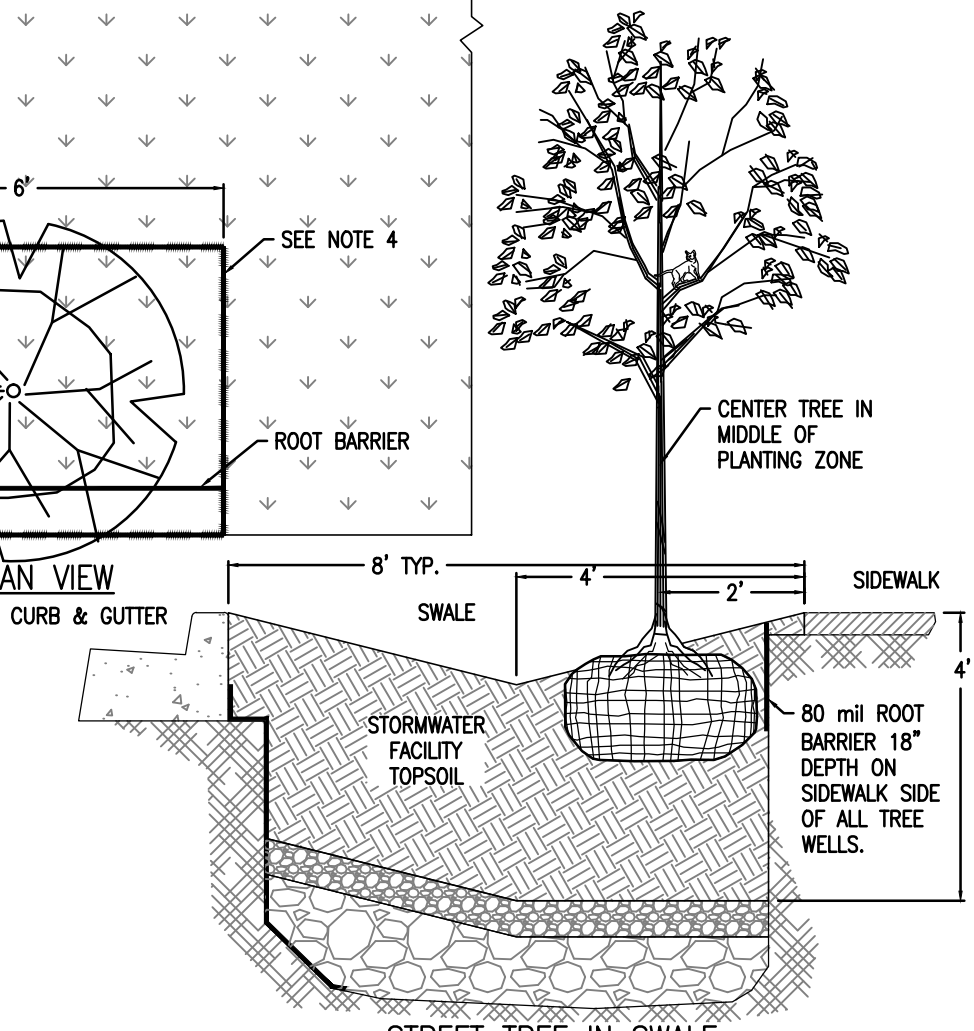

STREET TREE IN SWALE

IMPORTANT: Location of trees must meet clearance requirements established by the City of Portland. Utility conflicts and existing conditions can effect tree placement. Locate utilities prior to installing trees.

For specific clearance requirements contact:

PBOT	(503) 823–7884
PWB	(503) 823–7368
BES	(503) 823–7761
Urban Forestry	(503) 823–4489

– DRAWING NOT TO SCALE –

STORMWATER MANAGEMENT MANUAL TYPICAL DETAILS

– Green Streets –

Street Tree Detail

Swales

Bureau of Environmental Services

NUMBER

SW–302

TEMPLATE 1

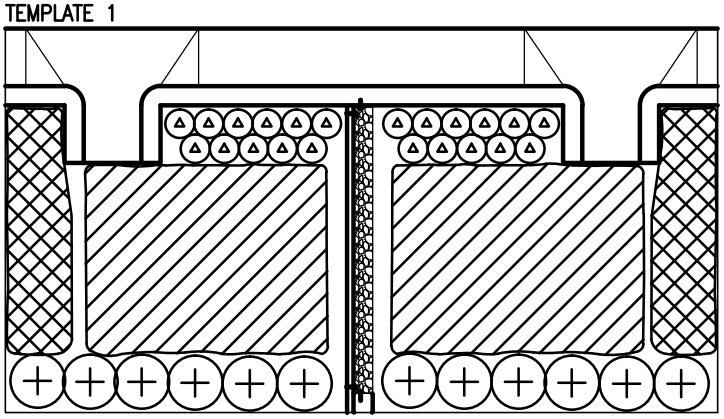

PLANT LEGEND 1

Symbol	Botanical Name / Common Name
ZONE A	
	Juncus patens
	Spreading rush
	w/Camassia leichtlinii
	Great camas– interspersed for accent
ZONE B	
	Mahonia repens
	Creeping oregon grape
	Spiraea x bumalda 'Goldflame'
	Goldflame spirea
	Arcostapylos uva–ursi
	Kinnickinnick

TEMPLATE 2

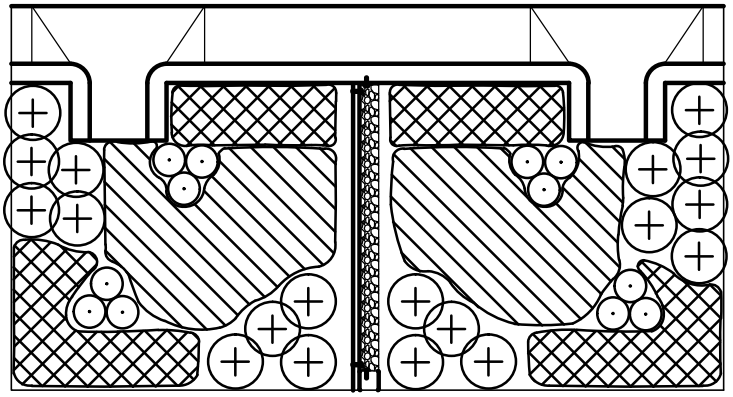

PLANT LEGEND 2

Symbol	Botanical Name / Common Name
ZONE A	
	Carex obnupta
	Slough sedge
	Deschampsia cespitosa
	Tufted hair grass
	w/Camassia leichtlinii
	Great camas– interspersed for accent
ZONE B	
	Fragaria chiloensis
	Coastal strawberry
	Cornus sericea 'Kelseyi'
	Kelsey dogwood

TEMPLATE 3

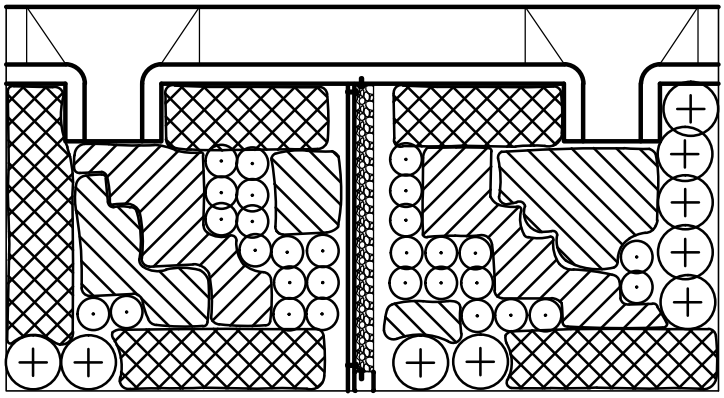

PLANT LEGEND 3

Symbol	Botanical Name / Common Name
ZONE A	
	Juncus patens
	Spreading rush
	Carex obnupta
	Slough sedge
	Deschampsia cespitosa
	Tufted hair grass
ZONE B	
	Arcostapylos uva–ursi
	Kinnickinnick
	Spiraea densiflora
	Sub–alpine spiraea
	w/Narcissus spp.
	Daffodils– interspersed for accent

INSTRUCTIONS

1. Choose a template and alter it to design. These are examples of approved planting templates. Other planting plans may be approved.

2. Plant lists and quantity requirements are found in Section 2.3.3 and Appendix F.4, respectively, of the City of Portland Stormwater Management Manual.

3. Planting table required. State plant species, spacing, and quantities per Zone A and Zone B and per swale. Include the square footage of Zone A and B.

– DRAWING NOT TO SCALE –

STORMWATER MANAGEMENT MANUAL TYPICAL DETAILS

– Green Streets –

Landscape Planting Templates

Swales

Bureau of Environmental Services

NUMBER

SW–303

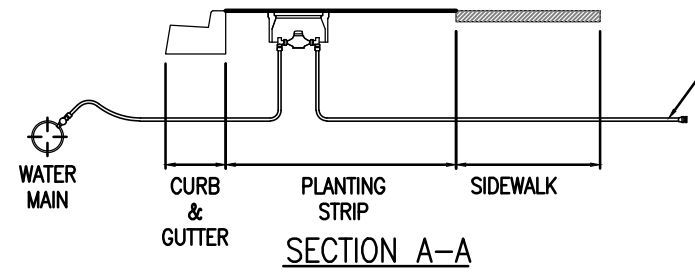

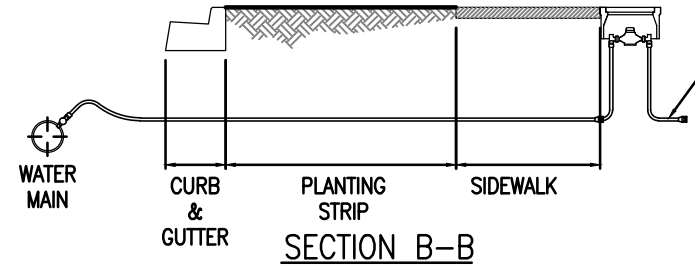

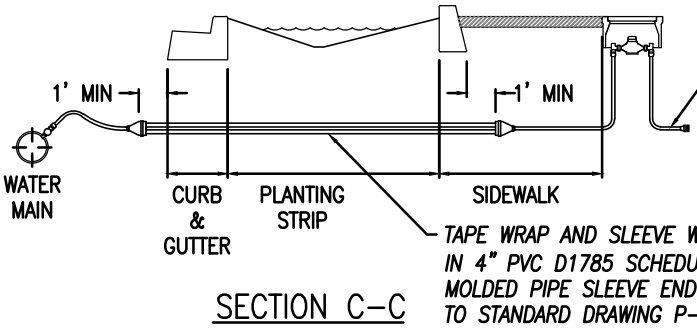

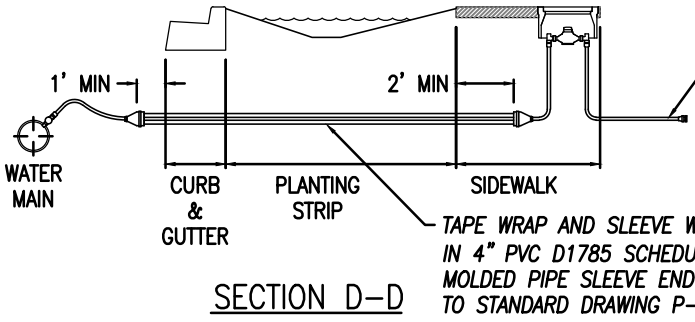

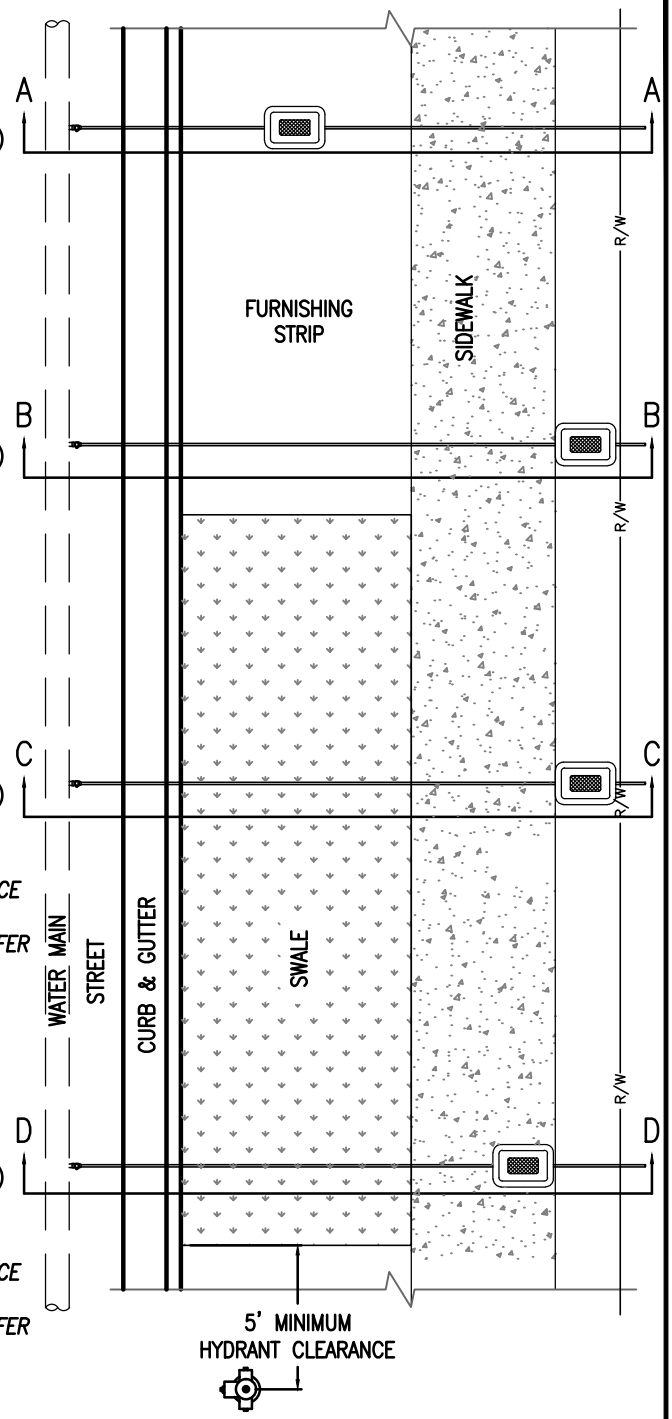

DESIGNER INFORMATION

1. Refer to Fire Hydrant Assembly Standard Drawing P–700. Center of hydrants must have min 5 ft clearance to the outside edge of stormwater facility.
2. Standard meter location is Option A. Option B or C can be used only if the meter box is fully within the Right–of–Way. Option D can only be used for an existing service and when other options are infeasible.
3. Refer to 1" Service Assembly Standard Drawing P–780. For larger services or other appurtenances, contact PWB development services at (503) 823–7368. Water service line must be 2 ft min. from bottom of stormwater facility topsoil.
4. Maintain 2 ft skin–to–skin separation distance between the face of gutter pan and the water main. If water main is < 2 ft from face of gutter pan, the water main must be relocated unless otherwise approved by PWB. Verification of water main depth is required prior to PWB approval.
5. Cross–section views are not required on construction plans.

– DRAWING NOT TO SCALE –

STORMWATER MANAGEMENT MANUAL TYPICAL DETAILS

– Green Streets –

Meter & Hydrant Locations

Swales

Bureau of Environmental Services

NUMBER

SW–304

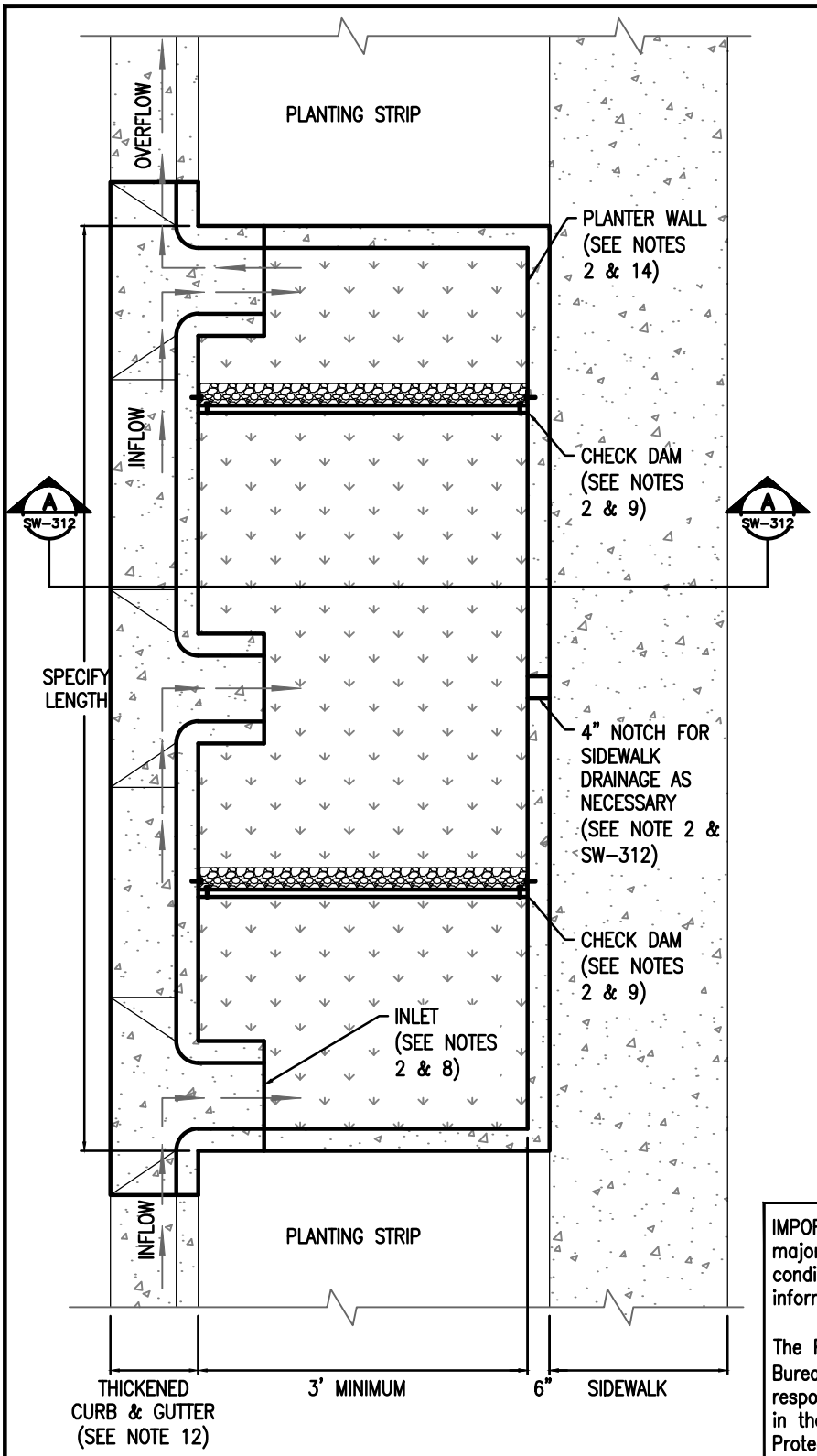

PLAN VIEW

- DRAWING NOT TO SCALE -

DESIGNER INFORMATION:

1. Adapt this plan view example to your engineered design. Maximize surface storage.
2. Provide beginning and ending stations for each facility. Provide stationing and/or dimensions and elevations at each inlet, outlet, check dam, planter corner and sidewalk notches.
3. Sidewalk elevation must be set above check dam and inlet elevations to allow overflow to drain to street before sidewalk.
4. Existing utility lines must be sleeved or relocated. Proposed utility lines to be located out of facility.
5. Longitudinal slope of planter matches the road.
6. Area and Depth of facility are based upon engineering calculations and right-of-way constraints. See Chapter 2 of the City of Portland Stormwater Management Manual (SWMM).
7. Minimum interior planter width is 3 feet. A minimum of 4 feet is required for planters with street trees.

RELATED DETAILS AND RESOURCES:

8. Concrete Inlet details SW-331 and SW-332
9. Check Dam details SW-342 and SW-343
10. Special requirements for water lines, meters, and fire hydrants (see SW-316)
11. Planter Planting Template (see SW-315)
12. Thickened Curb and Gutter per PBOT standard drawing P-540
13. Stormwater facility construction and topsoil requirements see City of Portland Standard Construction Specifications, sections 00415 and 01040.14(d)
14. Planter wall detail (see SW-315)

IMPORTANT: Utility conflicts and existing conditions can create major design variables. Locate utilities and survey existing conditions prior to beginning design work and include information on design drawings.

The Portland Bureau of Transportation (PBOT), Portland Water Bureau (PWB), and Bureau of Environmental Services (BES) are responsible for the review and approval of Stormwater Swales in the public right of way. Stormwater facilities in Wellhead Protection Areas may require special containment measures as required by City Code 21.35.

For more information contact:

PBOT	(503) 823-7884	BES	(503) 823-7761
PWB	(503) 823-7368	Urban Forestry	(503) 823-4489

STORMWATER MANAGEMENT MANUAL TYPICAL DETAILS

- Green Streets -

Plan View without Parking

Planters

Bureau of Environmental Services

NUMBER

SW-310

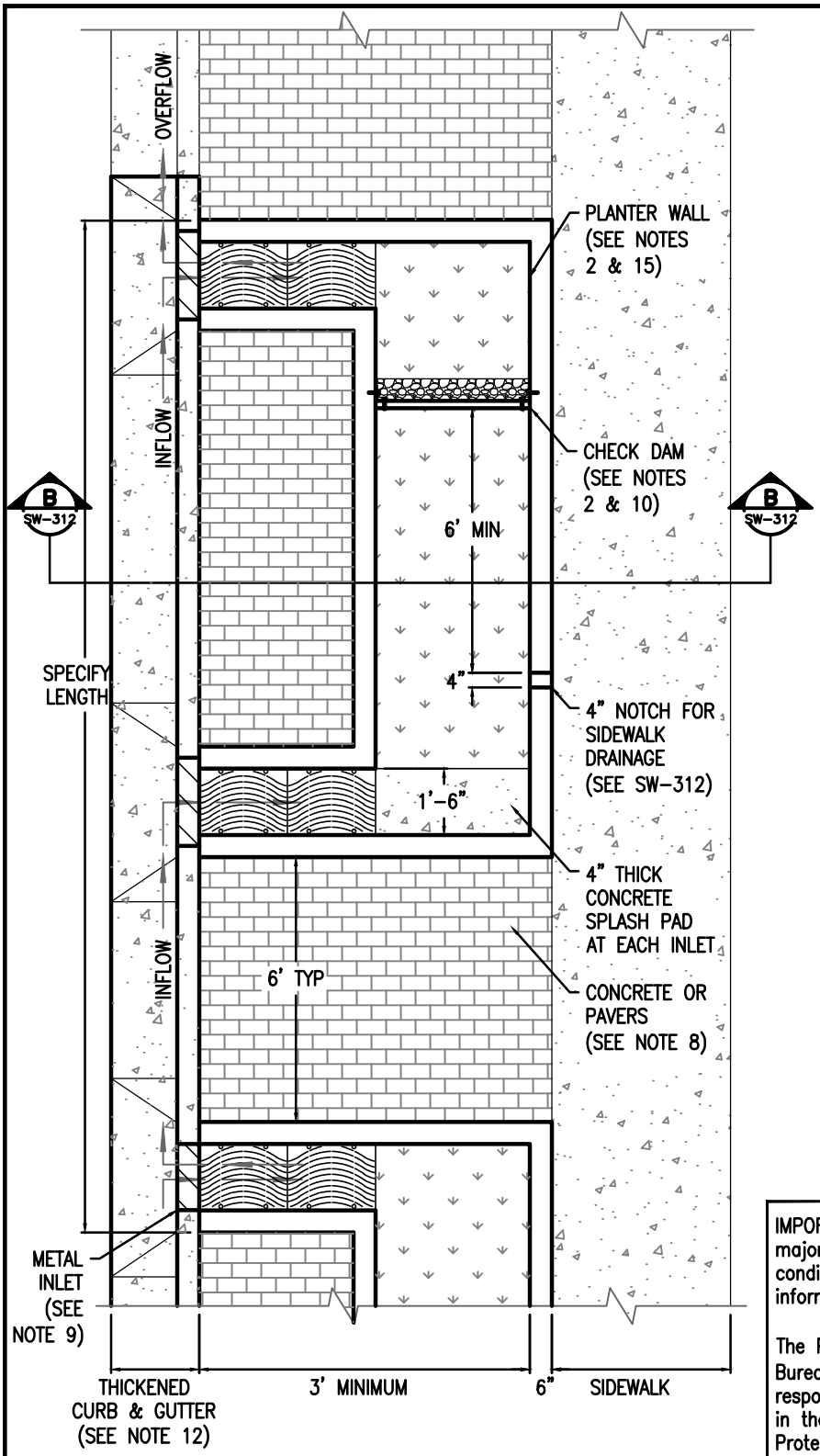

PLAN VIEW

- DRAWING NOT TO SCALE -

DESIGNER INFORMATION:

1. Adapt this plan view example to your engineered design. Maximize surface storage.
2. Provide beginning and ending stations for each facility. Provide stationing and/or dimensions and elevations at each inlet, outlet, check dam, planter corner and sidewalk notches.
3. Sidewalk elevation must be set above check dam and inlet elevations to allow overflow to drain to street before sidewalk.
4. Existing utility lines must be sleeved or relocated. Proposed utility lines to be located out of facility.
5. Longitudinal slope of planter matches the road.
6. Area and Depth of facility are based upon engineering calculations and right-of-way constraints. See Chapter 2 of the City of Portland Stormwater Management Manual (SWMM).
7. Minimum interior planter width is 3 feet. A minimum of 4 feet is required for planters with street trees.
8. May use concrete or pavers per City Standards.

RELATED DETAILS AND RESOURCES:

9. Metal Inlet details SW-332, SW-335 and SW-336
10. Check Dam details SW-342 and SW-343
11. Special requirements for water lines, meters, and fire hydrants (see SW-316)
12. Planter Planting Template (see SW-315)
13. Thickened Curb and Gutter per PBOT standard drawing P-540
14. Stormwater facility construction and topsoil requirements see City of Portland Standard Construction Specifications, sections 00415 and 01040.14(d)
15. Planter wall detail (see SW-315)

IMPORTANT: Utility conflicts and existing conditions can create major design variables. Locate utilities and survey existing conditions prior to beginning design work and include information on design drawings.

The Portland Bureau of Transportation (PBOT), Portland Water Bureau (PWB), and Bureau of Environmental Services (BES) are responsible for the review and approval of Stormwater Swales in the public right of way. Stormwater facilities in Wellhead Protection Areas may require special containment measures as required by City Code 21.35.

For more information contact:

PBOT	(503) 823-7884	BES	(503) 823-7761
PWB	(503) 823-7368	Urban Forestry	(503) 823-4489

STORMWATER MANAGEMENT MANUAL TYPICAL DETAILS

- Green Streets -

Plan View with Parking

Planters

Bureau of Environmental Services

NUMBER

SW-311

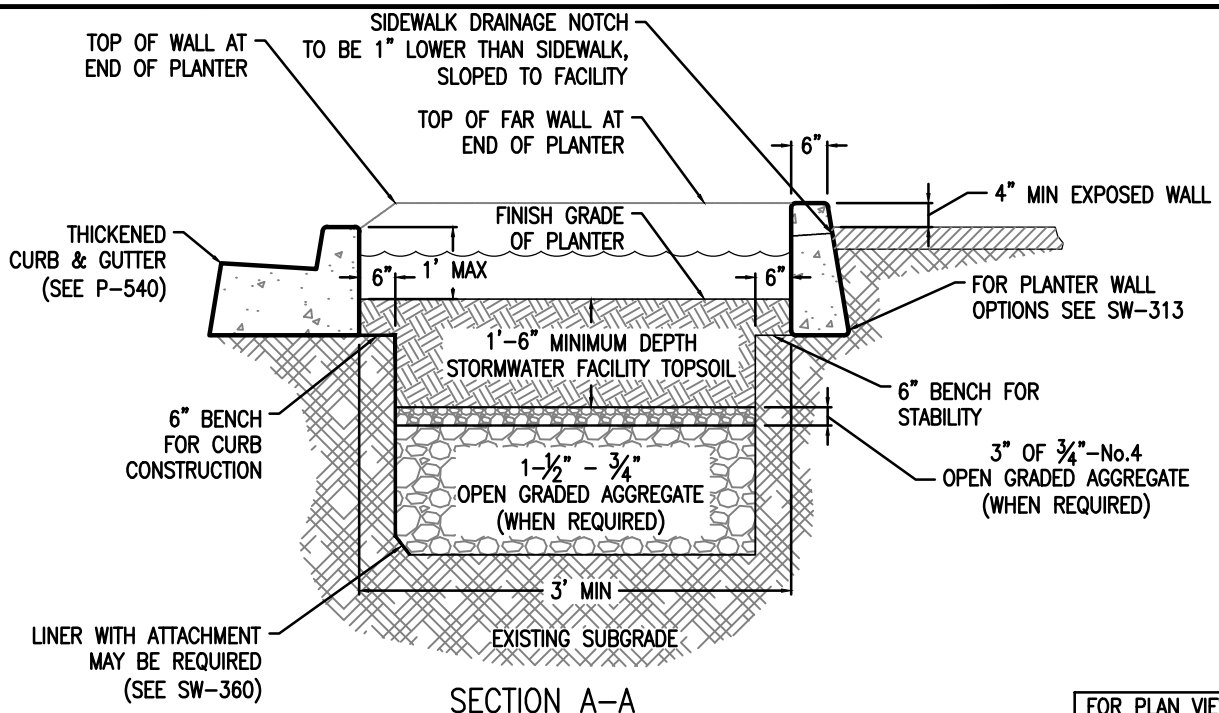

SECTION A–A
PLANTER WITHOUT PARKING

FOR PLAN VIEW SEE SW-310

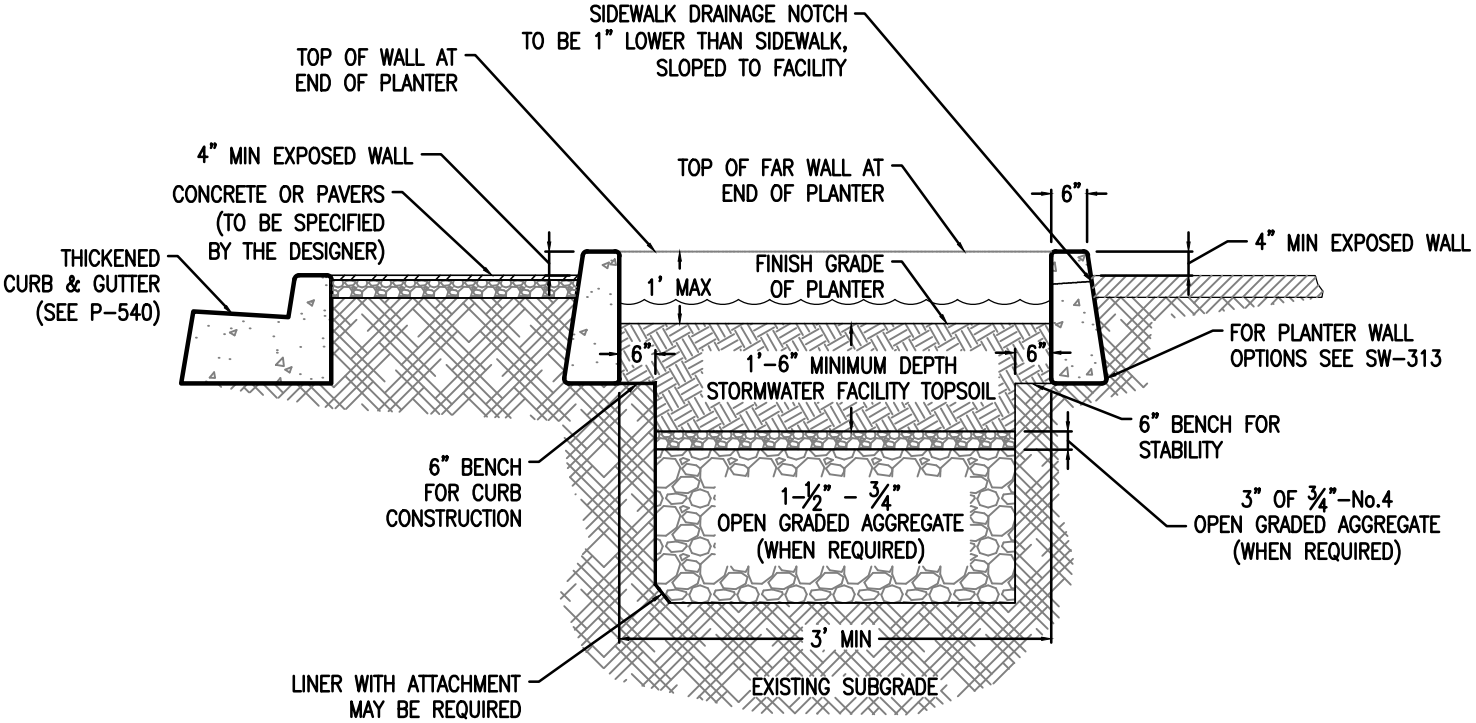

SECTION B–B
PLANTER WITH PARKING

FOR PLAN VIEW SEE SW-311

DESIGNER INFORMATION

See SW-335 and SW-336 for Channel and Grate details.

CONSTRUCTION NOTE

Scarify the native soil following the initial excavation and before installing topsoil of rock.

– DRAWING NOT TO SCALE –

STORMWATER MANAGEMENT MANUAL TYPICAL DETAILS

– Green Streets –

Section Views

Planters

Bureau of Environmental Services

NUMBER

SW–312

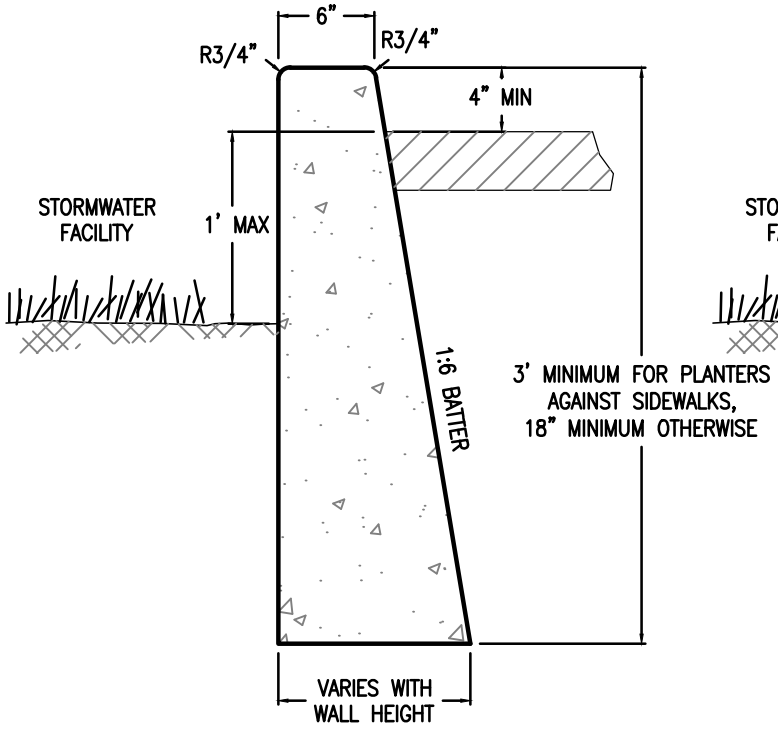

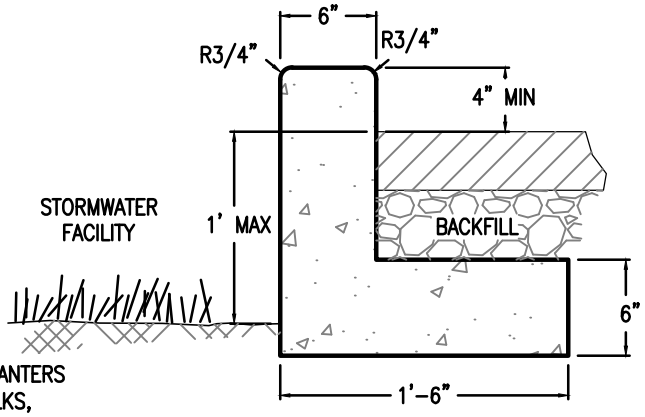

DESIGNER INFORMATION

1. Special design considerations or structural review may be required for longer planter wall spans. Steel reinforcement or additional concrete check dams may be needed for stability.
2. Specify one of the above planter wall options based on site conditions.
3. Maintain 1:6 batter for walls and 4" minimum to top of curb
4. If a liner is used with and L-shaped wall, the wall height must be increased. Three inches of concrete is required on all side of the liner attachment (see SW-360)

CONSTRUCTION NOTE

Finish all exposed concrete surfaces.

- DRAWING NOT TO SCALE -

STORMWATER MANAGEMENT MANUAL TYPICAL DETAILS

- Green Streets -

Planter Wall Details

Planters

Bureau of Environmental Services

NUMBER

SW-313

STREET TREES	
Botanical Name	Common Name
WITH power lines	
Carpinus caroliniana	American Hornbeam
Fraxinus pennsylvanica 'Johnson'	Leprechaun Ash
Gleditsia triacanthos 'Impcole'	Imperial Honeylocust
Koelreuteria paniculata	Goldenrain Tree
Prunus virginiana "Canada Red'	Canada Red Chokecherry
WITHOUT power lines	
Nyssa sylvatica	Black Tupelo
Celtis occidentalis	Hackberry
Quercus shumardii	Shumard Oak
Betula jacquemontii	Jacquemontii Birch
Acer campestre 'Evelyn'	Queen Elizabeth Hedge Maple
Gleditsia triacanthos 'Skycole'	Skyline Honeylocust

TABLE 1

DESIGNER INFORMATION:

1. Distance between trees varies: 20ft–30ft on center.
2. Stormwater facility construction and topsoil requirements, see City of Portland Standard Construction Specifications sections 00415 and 01040.14(d).
3. Street Tree list provided for reference do not include on plans. Use of tree species not on list must be approved by Urban Forestry 503–823–4489.
4. Include Tree Well and Street Tree views on plans.
5. Dimension topsoil and rock layers on non–tree side to correspond to Planter Section.
6. Include liner and call–out if used, see Planter Section SW–312.

CONSTRUCTION NOTES:

1. Contact Urban Forestry for tree installation assistance and permitting at (503) 823–4489.
2. Remove wire and burlap from root ball prior to backfilling.
3. Set top of root ball 1" –2" above topsoil surface.
4. Deepen soil section minimum; 4ft wide, 6ft long, 4ft deep.

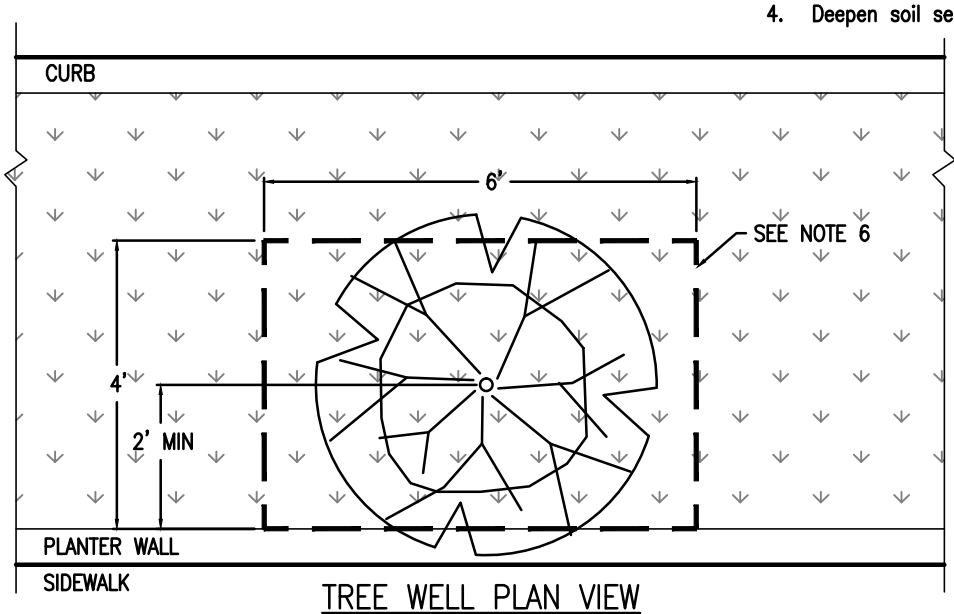

TREE WELL PLAN VIEW

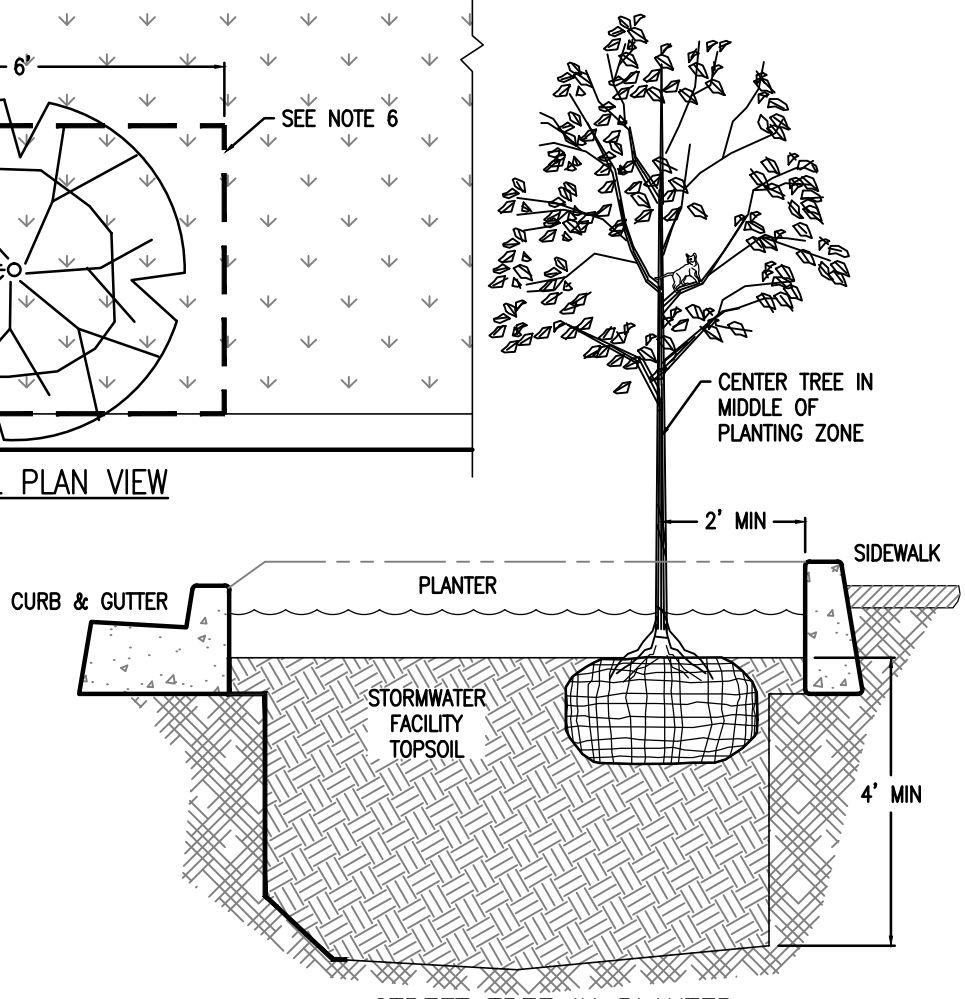

STREET TREE IN PLANTER

IMPORTANT: Location of trees must meet clearance requirements established by the City of Portland. Utility conflicts and existing conditions can effect tree placement. Locate utilities prior to installing trees.

For specific clearance requirements contact:

PBOT	(503) 823–7884
PWB	(503) 823–7368
BES	(503) 823–7761
Urban Forestry	(503) 823–4489

– DRAWING NOT TO SCALE –

STORMWATER MANAGEMENT MANUAL TYPICAL DETAILS

– Green Streets –

Street Tree Detail

Planters

Bureau of Environmental Services

NUMBER

SW–314

TEMPLATE 1

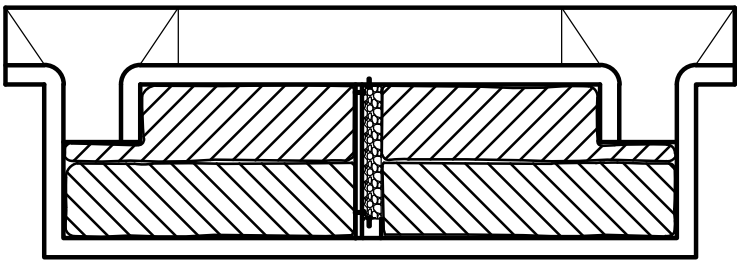

PLANT LEGEND 1

Symbol	Botanical Name / Common Name
	Juncus patens
	Spreading rush
	w/Camassia leichtlinii
	Great camas– interspersed for accent
	Carex obnupta
	Slough sedge

TEMPLATE 2

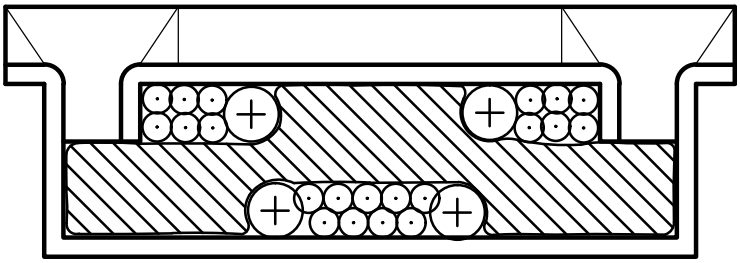

PLANT LEGEND 2

Symbol	Botanical Name / Common Name
	Carex obnupta
	Slough sedge
	Deschampsia cespitosa
	Tufted hair grass
	Cornus sericea 'Kelseyi'
	Kelsey dogwood
	w/Iris douglasii
	Douglas' Iris– interspersed for accent

TEMPLATE 3

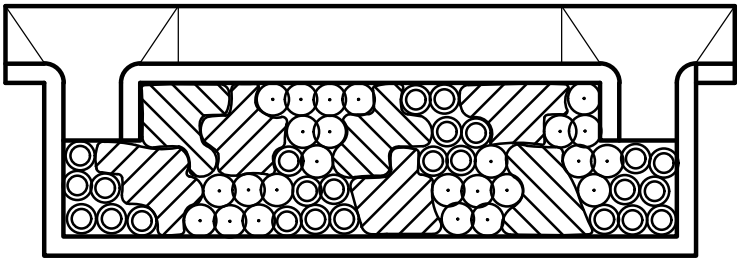

PLANT LEGEND 3

Symbol	Botanical Name / Common Name
	Carex obnupta
	Slough sedge
	Deschampsia cespitosa
	Tufted hair grass
	Juncus patens
	Spreading rush
	Carex morrowii 'Ice Dance'
	Ice Dance Sedge
	w/Camassia leichtlinii
	Great camas– interspersed for accent

INSTRUCTIONS

1. Choose a template and alter it to design. These are examples of approved planting templates. Other planting plans may be approved.
2. Plant lists and quantity requirements are found in Section 2.3.3 and Appendix F.4, respectively, of the City of Portland Stormwater Management Manual.
3. Planting table required. State plant species, spacing, and quantities per planter. Include the square footage of planter.

– DRAWING NOT TO SCALE –

STORMWATER MANAGEMENT MANUAL TYPICAL DETAILS

– Green Streets –

Landscape Planting Templates

Planters

Bureau of Environmental Services

NUMBER

SW–315

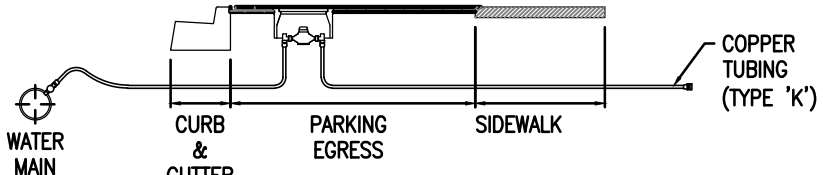

SECTION A–A

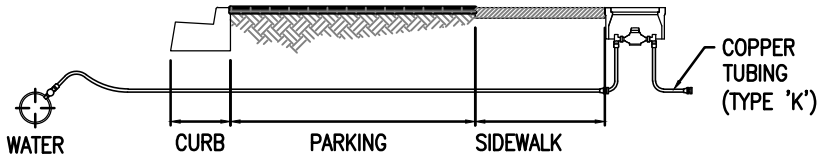

SECTION B–B

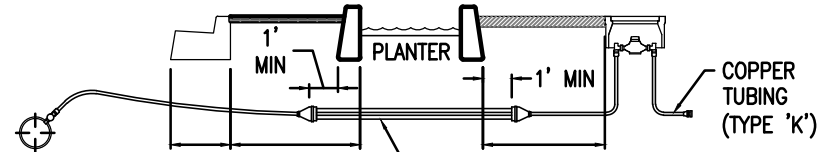

TAPE WRAP AND SLEEVE WATER SERVICE IN 4" PVC D1785 SCHEDULE 80 WITH MOLDED PIPE SLEEVE END SEALS. REFER TO STANDARD DRAWING P–770.

SECTION C–C

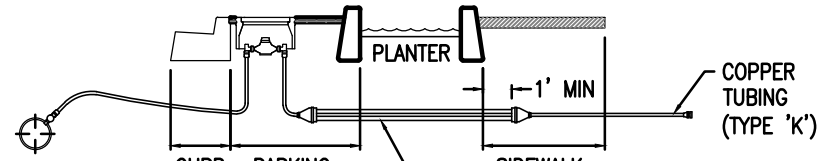

TAPE WRAP AND SLEEVE WATER SERVICE IN 4" PVC D1785 SCHEDULE 80 WITH MOLDED PIPE SLEEVE END SEALS. REFER TO STANDARD DRAWING P–770.

SECTION D–D

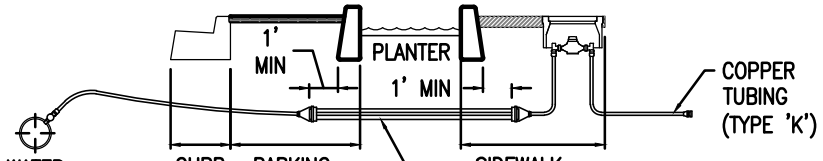

TAPE WRAP AND SLEEVE WATER SERVICE IN 4" PVC D1785 SCHEDULE 80 WITH MOLDED PIPE SLEEVE END SEALS. REFER TO STANDARD DRAWING P–770.

SECTION E–E

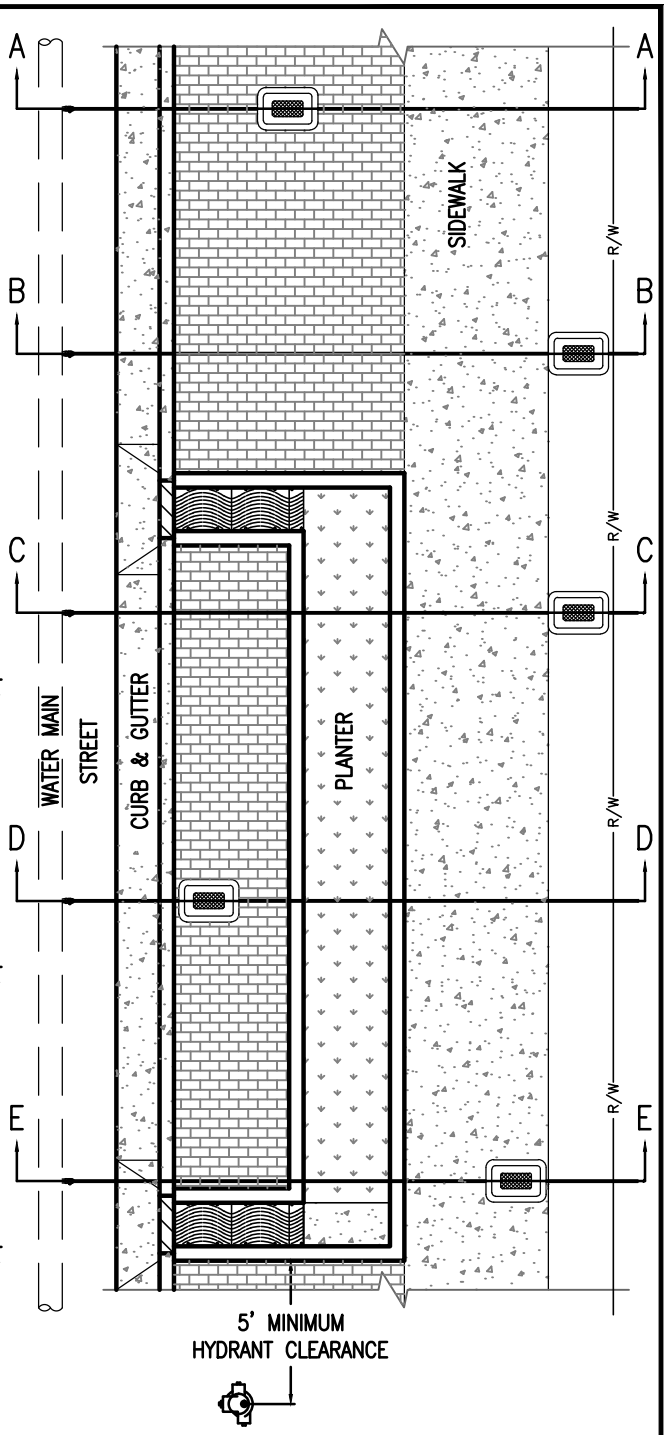

DESIGNER INFORMATION

1. Refer to Fire Hydrant Assembly Standard Drawing P–700. Center of hydrants must have min 5 ft clearance to the outside edge of stormwater facility.
2. Standard meter location is Option A. Option B or C can be used only if the meter box is fully within the Right–of–Way. Option D can only be used for an existing service and when other options are infeasible. Option E can only be used for an existing service and when other options are infeasible.
3. Refer to 1" Service Assembly Standard Drawing P–780. For larger services or other appurtenances, contact PWB development services at (503) 823–7368. Water service line must be 2 ft min. from bottom of stormwater facility topsoil.
4. Maintain 2 ft skin–to–skin separation distance between the face of gutter pan and the water main. If water main is < 2 ft from face of gutter pan, the water main must be relocated unless otherwise approved by PWB. Verification of water main depth is required prior to PWB approval.
5. Cross–section views are not required on construction plans.

– DRAWING NOT TO SCALE –

STORMWATER MANAGEMENT MANUAL TYPICAL DETAILS

– Green Streets –

Meter & Hydrant Locations

Planters

Bureau of Environmental Services

NUMBER

SW–316

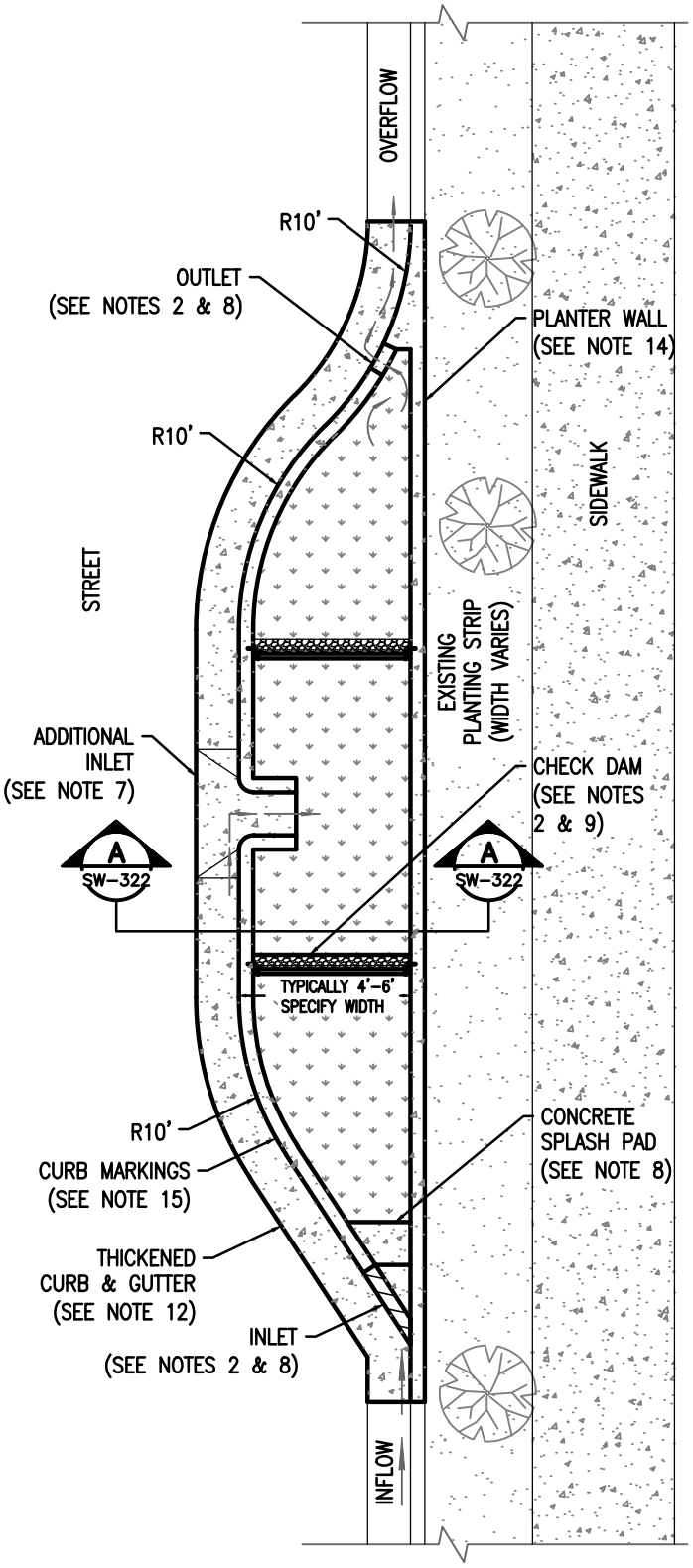

PLAN VIEW

– DRAWING NOT TO SCALE –

DESIGNER INFORMATION:

1. Adapt this plan view example to your engineered design. Maximize surface storage.
2. Provide beginning and ending stations for each facility. Provide stationing and/or dimensions and elevations at each inlet, outlet, check dam, planter corner and sidewalk notches.
3. Sidewalk elevation must be set above check dam and inlet elevations to allow overflow to drain to street before sidewalk.
4. Existing utility lines must be sleeved or relocated. Proposed utility lines to be located out of facility.
5. Longitudinal slope of planter matches the road.
6. Area and Depth of facility are based upon engineering calculations and right–of–way constraints. See Chapter 2 of the City of Portland Stormwater Management Manual (SWMM).
7. Additional inlets in facilities over 25 feet in length per BES requirements or site–specific requirements needs.

RELATED DETAILS AND RESOURCES:

8. Inlet and outlet details SW–333 and SW–334
9. Check Dam details SW–342 and SW–343
10. Special requirements for water lines, meters, and fire hydrants (see SW–316)
11. Planter Planting Template (see SW–315)
12. Thickened Curb and Gutter (see PBOT standard drawing P–540)
13. Stormwater facility construction and topsoil requirements see City of Portland Standard Construction Specifications, sections 00415 and 01040.14(d)
14. Planter wall detail (see SW–313)
15. Pavement markings see PBOT standard drawing P–434

IMPORTANT: Utility conflicts and existing conditions can create major design variables. Locate utilities and survey existing conditions prior to beginning design work and include information on design drawings.

The Portland Bureau of Transportation (PBOT), Portland Water Bureau (PWB), and Bureau of Environmental Services (BES) are responsible for the review and approval of Stormwater Swales in the public right of way. Stormwater facilities in Wellhead Protection Areas may require special containment measures as required by City Code 21.35.

For more information contact:

PBOT	(503) 823–7884	BES	(503) 823–7761
PWB	(503) 823–7368	Urban Forestry	(503) 823–4489

STORMWATER MANAGEMENT MANUAL TYPICAL DETAILS

– Green Streets –

In–Street Plan View

Curb Extensions

Bureau of Environmental Services

NUMBER

SW–320

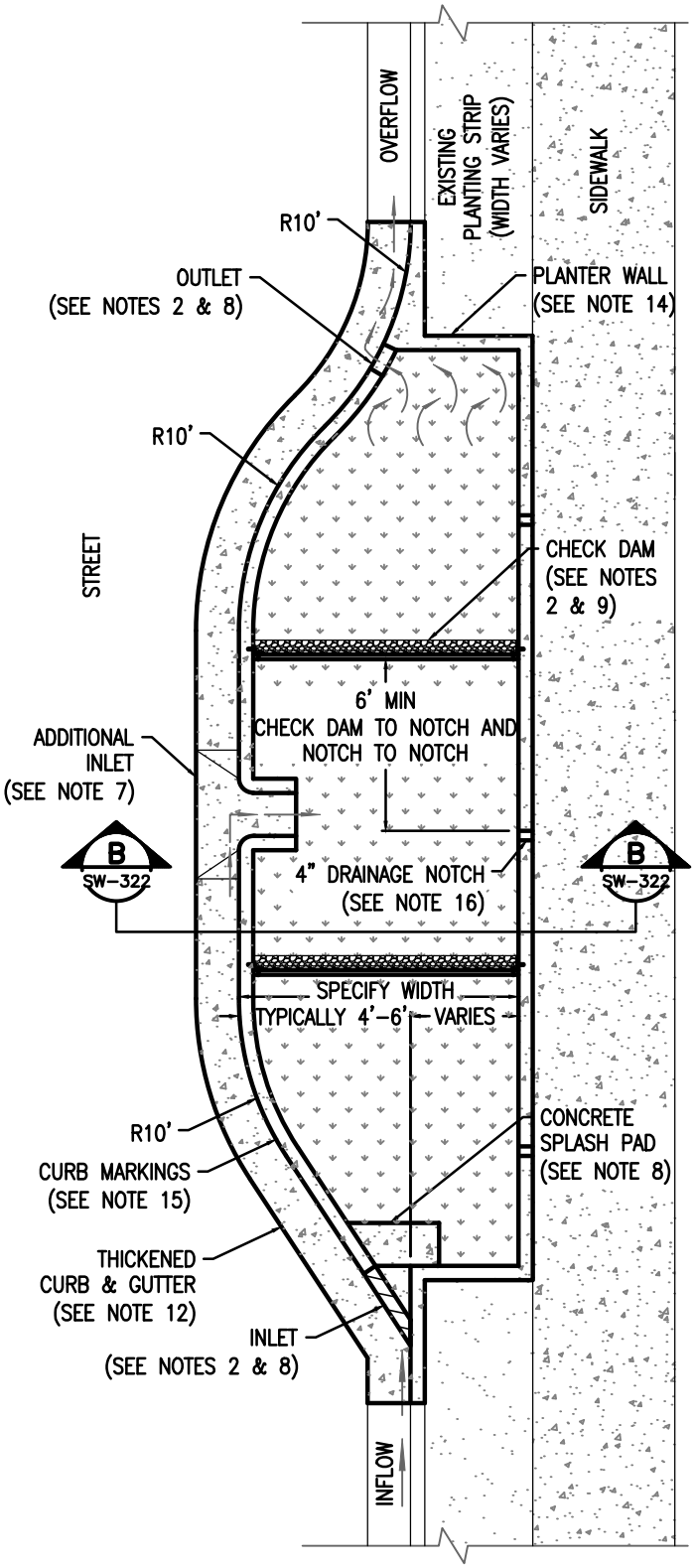

PLAN VIEW

- DRAWING NOT TO SCALE -

DESIGNER INFORMATION:

1. Adapt this plan view example to your engineered design. Maximize surface storage.
2. Provide beginning and ending stations for each facility. Provide stationing and/or dimensions and elevations at each inlet, outlet, check dam, planter corner and sidewalk notches.
3. Sidewalk elevation must be set above check dam and inlet elevations to allow overflow to drain to street before sidewalk.
4. Existing utility lines must be sleeved or relocated. Proposed utility lines to be located out of facility.
5. Longitudinal slope of planter matches the road.
6. Area and depth of facility are based upon engineering calculations and right-of-way constraints. See Chapter 2 of the City of Portland Stormwater Management Manual (SWMM).
7. Additional inlets in facilities over 25 feet in length per BES requirements or site-specific requirements needs.

RELATED DETAILS AND RESOURCES:

8. Inlet and outlet details SW-333 and SW-334
9. Check Dam details SW-342 and SW-343
10. Special requirements for water lines, meters, and fire hydrants (see SW-316)
11. Planter Planting Template (see SW-315)
12. Thickened Curb and Gutter per PBOT standard drawing P-540
13. Stormwater facility construction and topsoil requirements see City of Portland Standard Construction Specifications, sections 00415 and 01040.14(d)
14. Planter wall detail (see SW-313)
15. Pavement markings (see PBOT standard drawing P-434)
16. 4" Sidlewalk-drainage notch (see SW-322)

IMPORTANT: Utility conflicts and existing conditions can create major design variables. Locate utilities and survey existing conditions prior to beginning design work and include information on design drawings.

The Portland Bureau of Transportation (PBOT), Portland Water Bureau (PWB), and Bureau of Environmental Services (BES) are responsible for the review and approval of Stormwater Swales in the public right of way. Stormwater facilities in Wellhead Protection Areas may require special containment measures as required by City Code 21.35.

For more information contact:

PBOT	(503) 823-7884	BES	(503) 823-7761
PWB	(503) 823-7368	Urban Forestry	(503) 823-4489

STORMWATER MANAGEMENT MANUAL TYPICAL DETAILS

- Green Streets -

In-Planting-Strip Plan View

Curb Extensions

Bureau of Environmental Services

NUMBER

SW-321

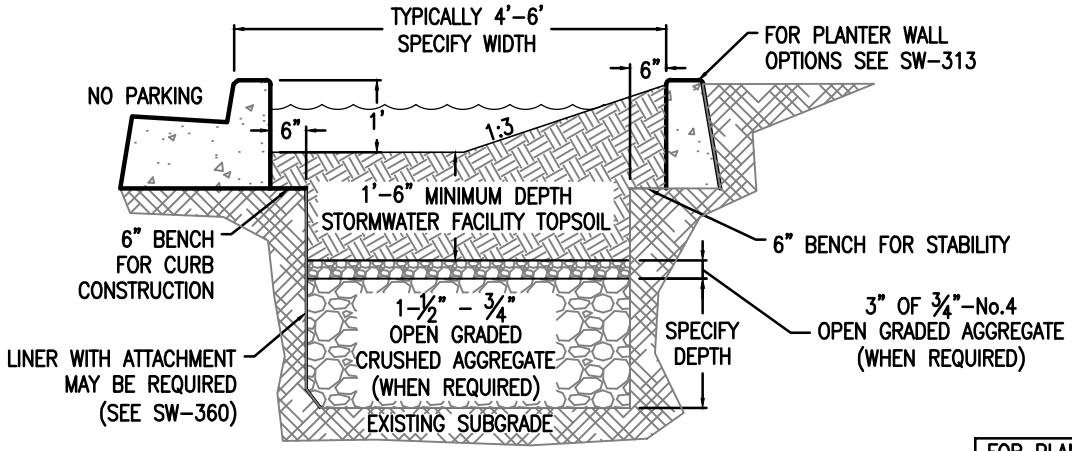

SECTION A–A

FOR PLAN VIEW
SEE SW–320

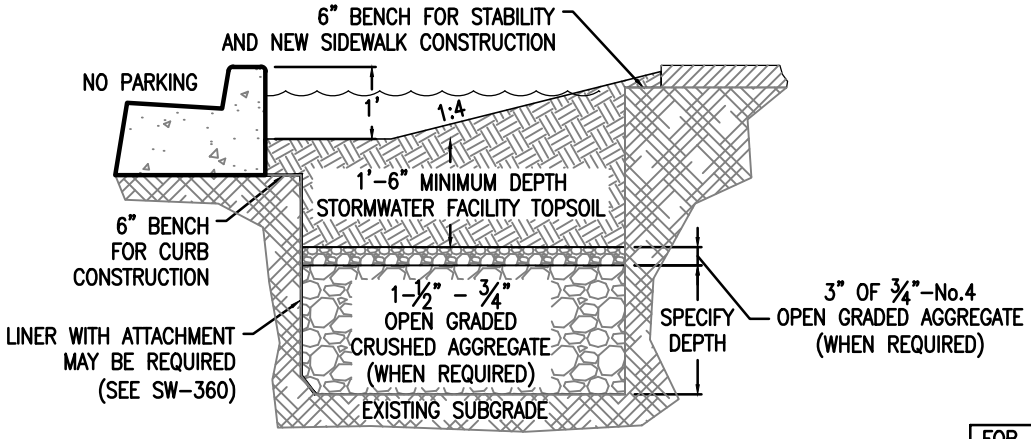

SECTION B–B

FOR PLAN VIEW
SEE SW–321

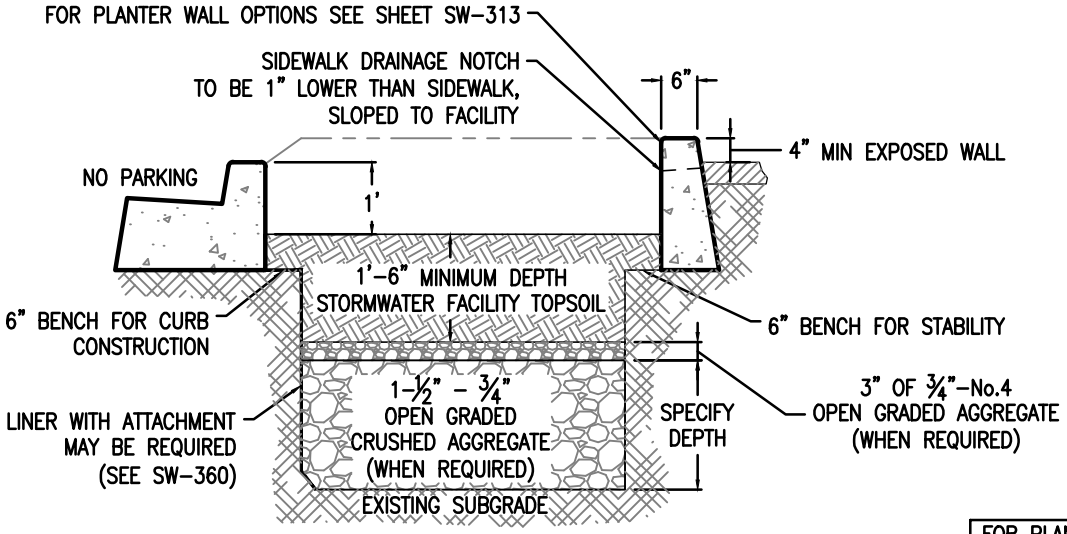

SECTION B–B

FOR PLAN VIEW
SEE SW–321

CONSTRUCTION NOTE

Scarify the native soil following the initial excavation and before installing topsoil of rock.

– DRAWING NOT TO SCALE –

STORMWATER MANAGEMENT MANUAL TYPICAL DETAILS

– Green Streets –

Section Views

Curb Extensions

Bureau of Environmental Services

NUMBER

SW–322

TEMPLATE 1

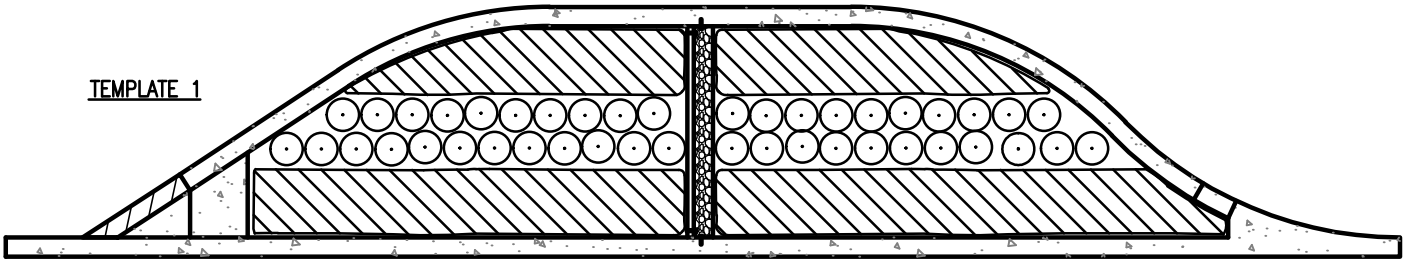

PLANT LEGEND 1

Symbol	Botanical Name / Common Name	Symbol	Botanical Name / Common Name
	Carex obnupta		*Deschampsia cespitosa*
	Slough sedge		Tufted hair grass
			w/Camassia leichtlinii
			Great camas– interspersed for accent

TEMPLATE 2

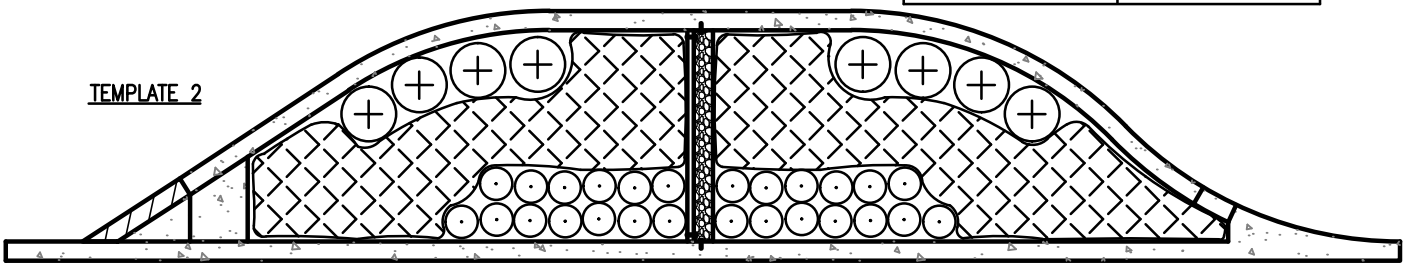

PLANT LEGEND 2

Symbol	Botanical Name / Common Name	Symbol	Botanical Name / Common Name
	Carex densa		*Deschampsia cespitosa*
	Dense sedge		Tufted hair grass
			w/Camassia leichtlinii
	Spiraea x bumalda 'Goldflame'		Great camas– interspersed for accent
	Goldflame spirea		

TEMPLATE 3

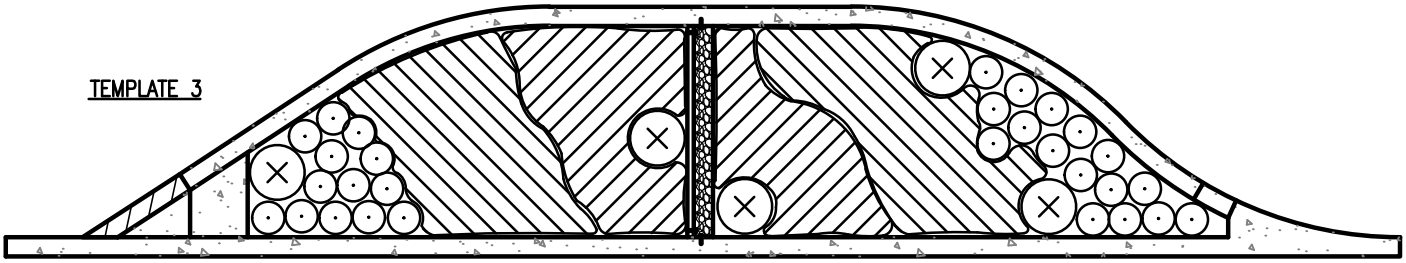

PLANT LEGEND 3

Symbol	Botanical Name / Common Name	Symbol	Botanical Name / Common Name
	Juncus patens		*Deschampsia cespitosa*
	Spreading rush		Tufted hair grass
	Carex obnupta		*Cornus sericea 'Kelseyi'*
	Slough sedge		Kelsey dogwood
			w/Narcissus spp.
			Daffodils– interspersed for accent

INSTRUCTIONS

1. Choose a template and alter it to design. These are examples of approved planting templates. Other planting plans may be approved.
2. Plant lists and quantity requirements are found in Section 2.3.3 and Appendix F.4, respectively, of the City of Portland Stormwater Management Manual.
3. Planting table required. State plant species, spacing, and quantities per planter. Include the square footage of planter.

– DRAWING NOT TO SCALE –

STORMWATER MANAGEMENT MANUAL TYPICAL DETAILS

– Green Streets –

Landscape Planting Templates

Curb Extensions

Bureau of Environmental Services

NUMBER

SW–323

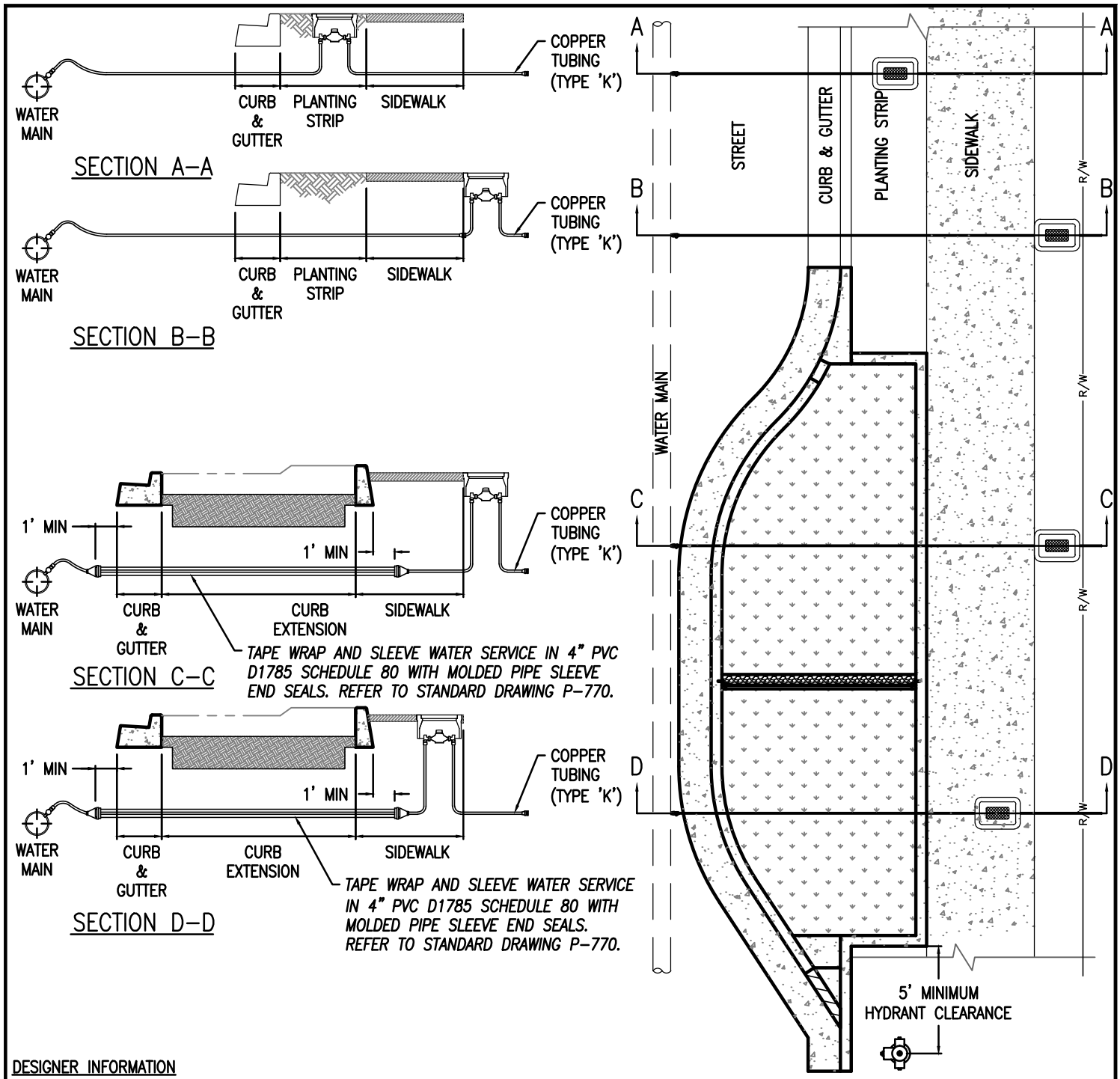

DESIGNER INFORMATION

1. Refer to Fire Hydrant Assembly Standard Drawing P–700. Center of hydrants must have min 5 ft clearance to the outside edge of stormwater facility.
2. Standard meter location is Option A. Option B or C can be used only if the meter box is fully within the Right–of–Way. Option D can only be used for an existing service and when other options are infeasible. Option E can only be used for an existing service and when other options are infeasible.
3. Refer to 1" Service Assembly Standard Drawing P–780. For larger services or other appurtenances, contact PWB development services at (503) 823–7368. Water service line must be 2 ft min. from bottom of stormwater facility topsoil.
4. Maintain 2 ft skin–to–skin separation distance between the face of gutter pan and the water main. If water main is < 2 ft from face of gutter pan, the water main must be relocated unless otherwise approved by PWB. Verification of water main depth is required prior to PWB approval.
5. Cross–section views are not required on construction plans.

– DRAWING NOT TO SCALE –

STORMWATER MANAGEMENT MANUAL TYPICAL DETAILS

– Green Streets –

Meter & Hydrant Locations

Curb Extensions

Bureau of Environmental Services

NUMBER

SW–324

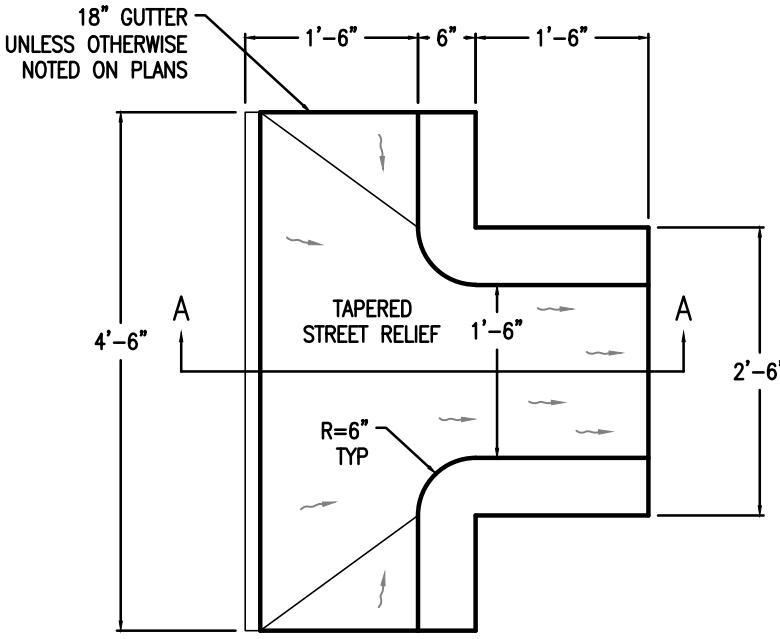

PLAN

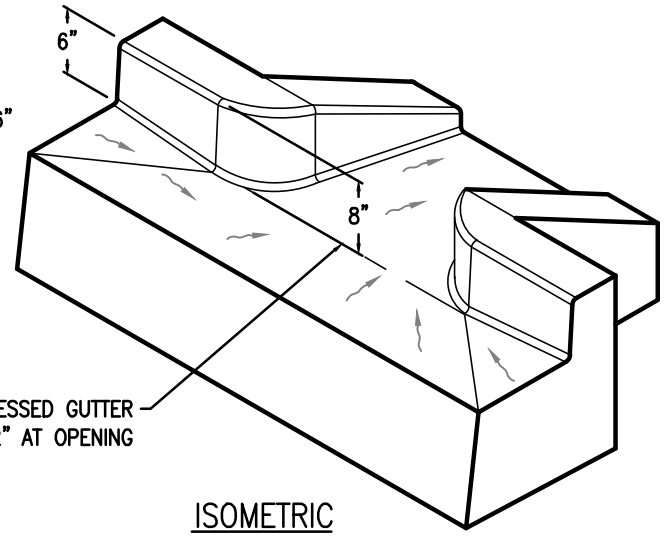

ISOMETRIC

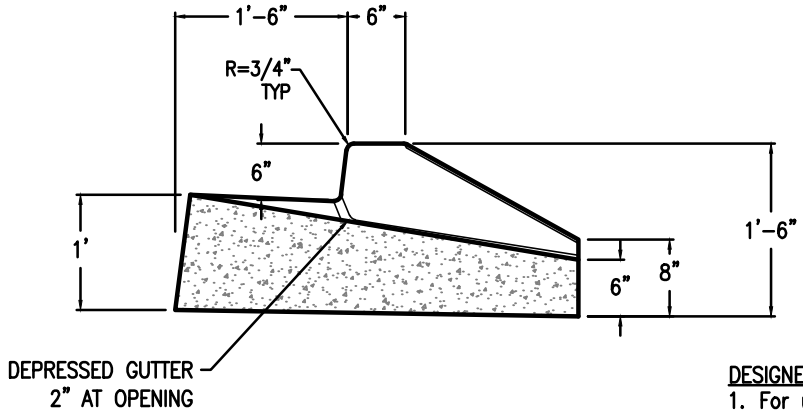

SECTION A-A

DESIGNER INFORMATION

1. For use with stormwater facilities with side slopes.
2. Refer to Standard Drawing P-540. Match gutter pan of adjacent curb and gutter.
3. Metal Inlet assembly, SW-332, required on high traffic streets.

- DRAWING NOT TO SCALE -

STORMWATER MANAGEMENT MANUAL TYPICAL DETAILS

- Green Streets -

Concrete Inlet with Wingwalls

Curb Inlets

Bureau of Environmental Services

NUMBER

SW-330

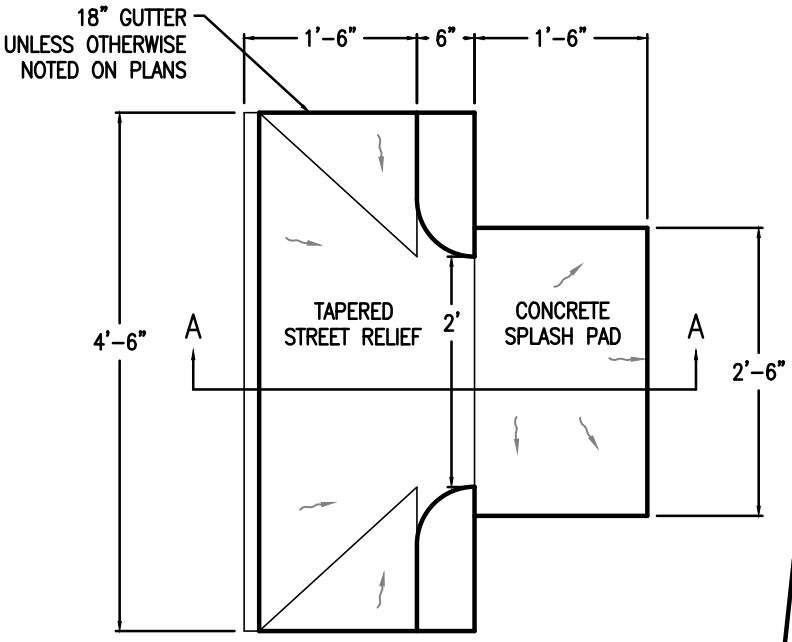

PLAN

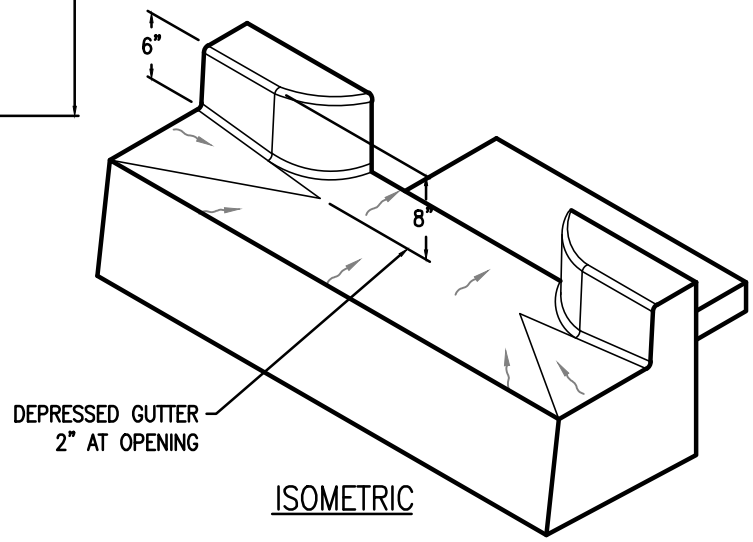

ISOMETRIC

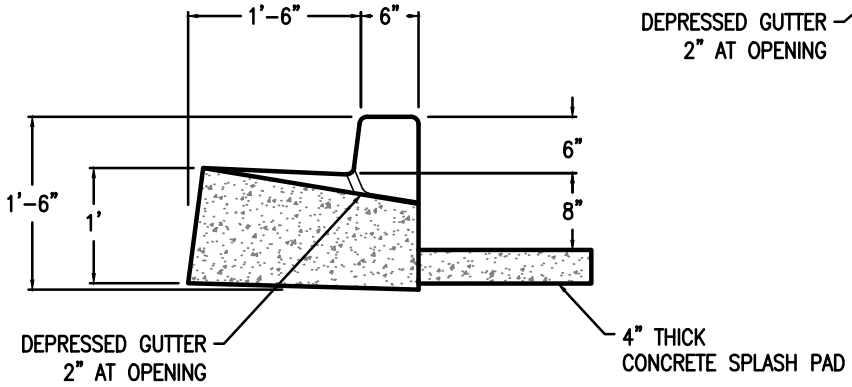

SECTION A-A

DESIGNER INFORMATION

1. For use with planters. If planter inlet is adjacent to planter wall, then include wall in detail.
2. Refer to Standard Drawing P-540. Match gutter pan of adjacent curb and gutter.
3. Metal Inlet assembly, SW-332, required on high traffic streets.

- DRAWING NOT TO SCALE -

STORMWATER MANAGEMENT MANUAL TYPICAL DETAILS

- Green Streets -

Concrete Inlet

Curb Inlets

Bureau of Environmental Services

NUMBER

SW-331

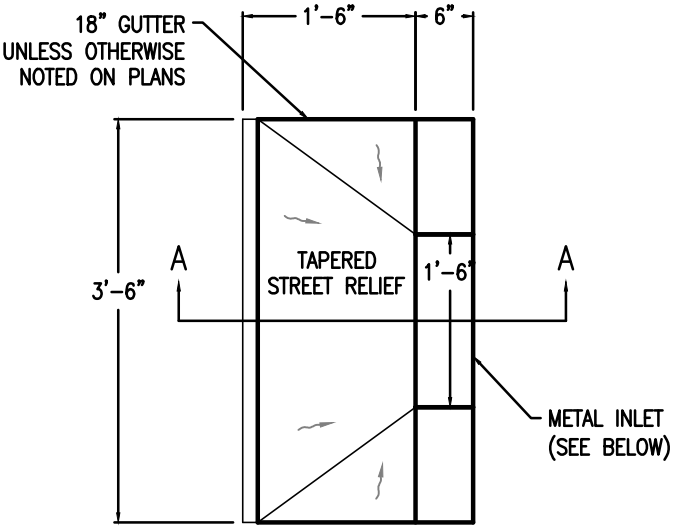

PLAN

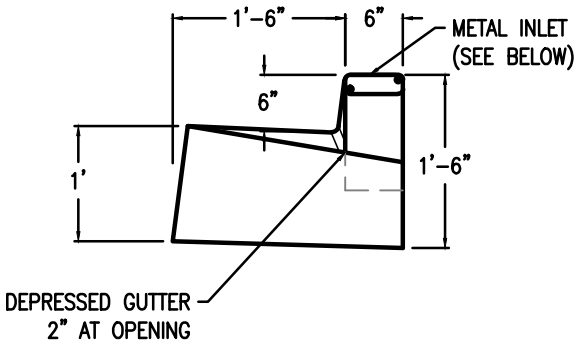

SECTION A-A

DESIGNER INFORMATION:

1. Metal Inlets required on high traffic streets.
2. Thickened curb and gutter. Use PBOT Standard Drawing P-540.
3. Metal Inlet assembly used with SW-330, SW-331, and SW-335.
4. When using with SW-330, modify curb for Metal Inlet assembly.
5. Design vertical wheel load is 8.5kips (1/2 of tandem axles weight specified in FHWA-HOP-06-105.
6. Metal Inlet width can be modified to 2 ft if site conditions require a 2 ft interior inlet width.

CONSTRUCTION NOTES:

1. 1.Headed concrete anchors shall meet the requirements of ASTM A-108.
2. HSS 6 x 2 x 1/8 Channel shall meet the requirements of ASTM A-500 Grade B.
3. End Plates shall meet the requirements of ASTM A-36.
4. Entire assembly shall be Hot-Dip Galvanized in accordance with ASTM A-123.
5. Single Bevel Groove Weld.

METAL INLET

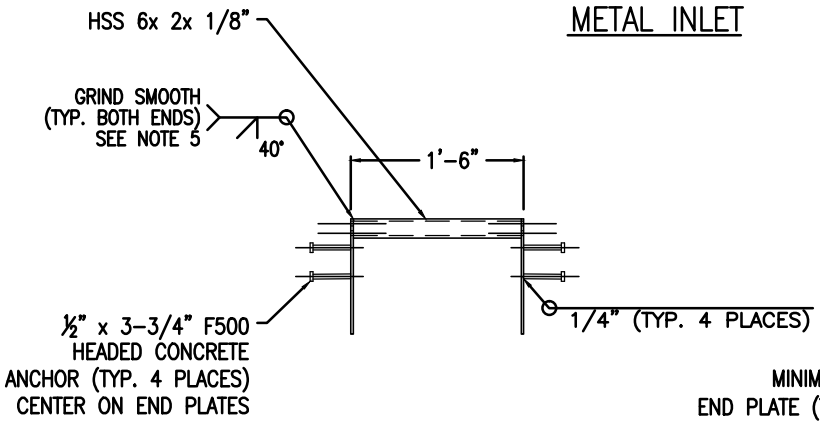

FRONT

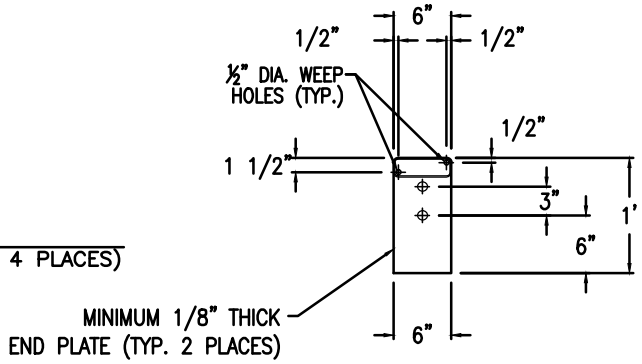

SIDE

- DRAWING NOT TO SCALE -

STORMWATER MANAGEMENT MANUAL TYPICAL DETAILS

- Green Streets -

Metal Inlet

Curb Inlets

Bureau of Environmental Services

NUMBER

SW-332

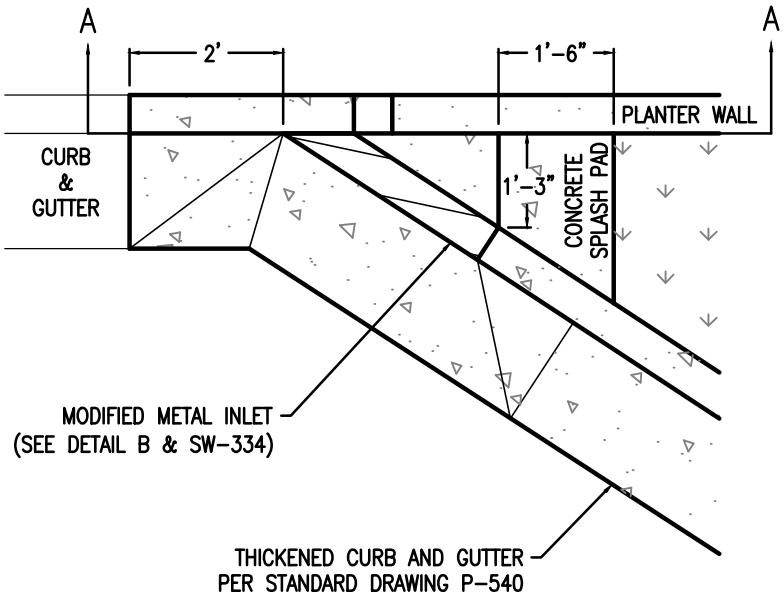

DETAIL A – INLET PLAN

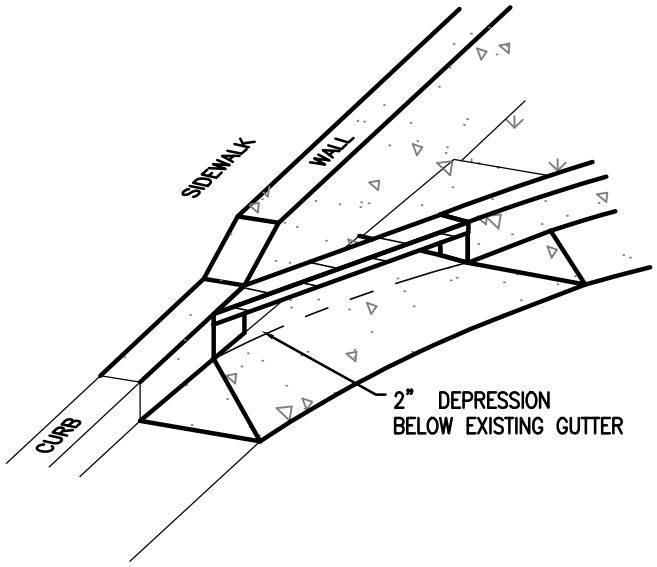

DETAIL B – INLET PERSPECTIVE

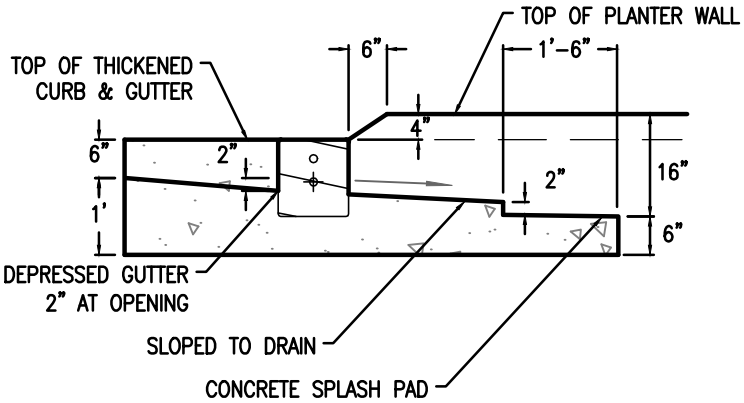

SECTION A–A

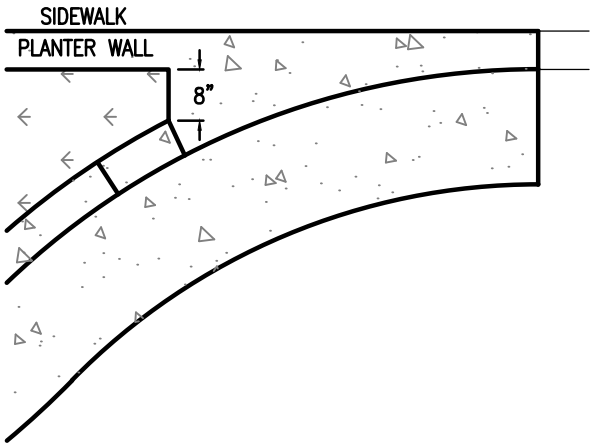

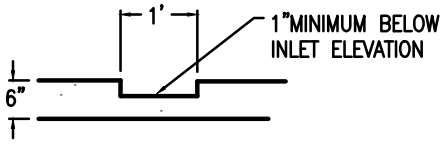

DETAIL D – OUTLET NOTCH

DESIGNER INFORMATION:

1. Additional inlets can be added if necessary (preferably immediately downstream of each check dam to minimize potential backflow).
2. Sawcut beyond facility and transition existing curb to new curb and gutter at 1" per foot as necessary.
3. Inlet may be modified to maximize flow entry to stormwater facility.

– DRAWING NOT TO SCALE –

STORMWATER MANAGEMENT MANUAL TYPICAL DETAILS

– Green Streets –

Inlet & Outlet for Curb Extensions

Curb Inlets

Bureau of Environmental Services

NUMBER

SW–333

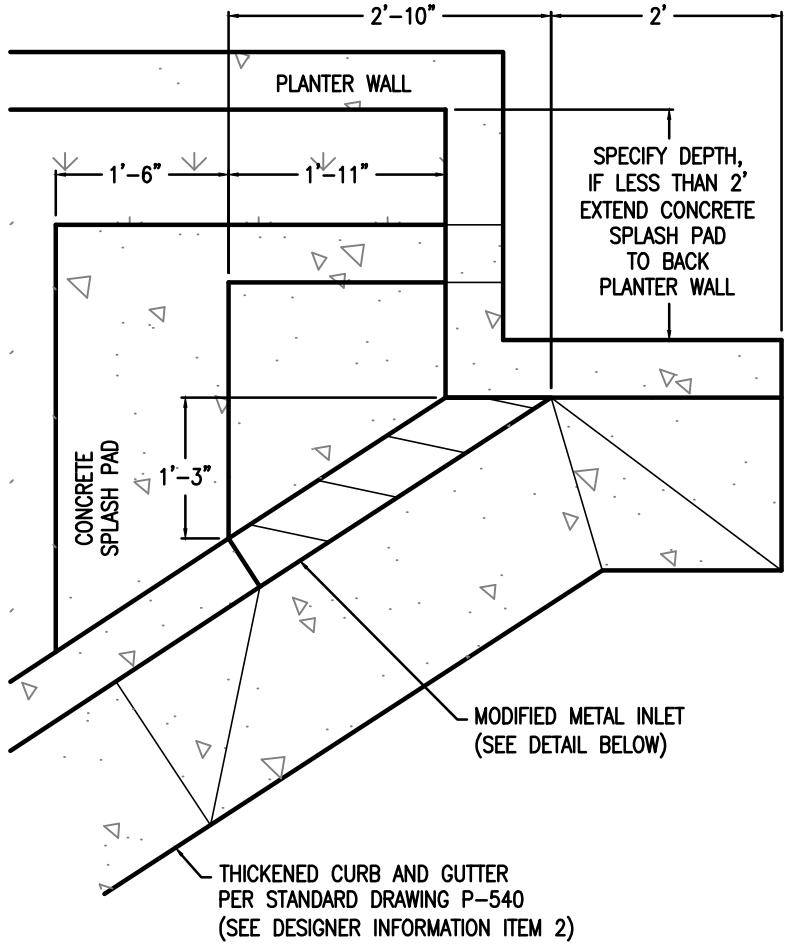

PLAN

DESIGNER INFORMATION:

1. Splash pad are required at all inlets.
2. Refer to Standard Drawing P-540. Match gutter pan of adjacent curb and gutter.
3. Design vertical wheel load is 8.5kips (1/2 of tandem axle weight specified in FHWA-HOP-06-105).

CONSTRUCTION NOTES:

1. Headed concrete anchors shall meet the requirements of ASTM A-108.
2. HSS 6 x 2 x 1/4 Channel shall meet the requirements of ASTM A-500 Grade B.
3. End Plates shall meet the requirements of ASTM A-36.
4. Entire assembly shall be Hot-Dip Galvanized in accordance with ASTM A-123.
5. Single Bevel Groove Weld.

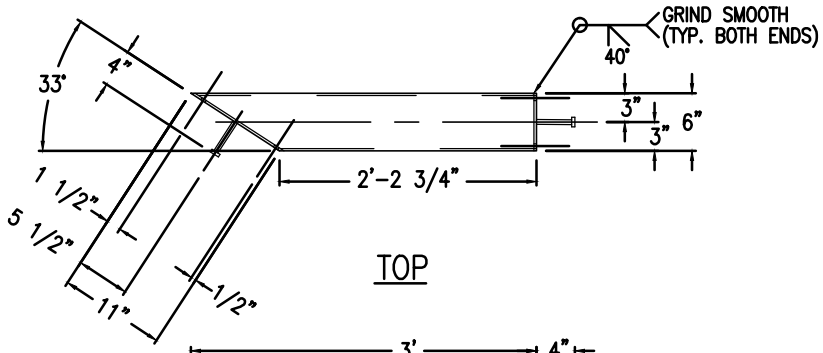

TOP

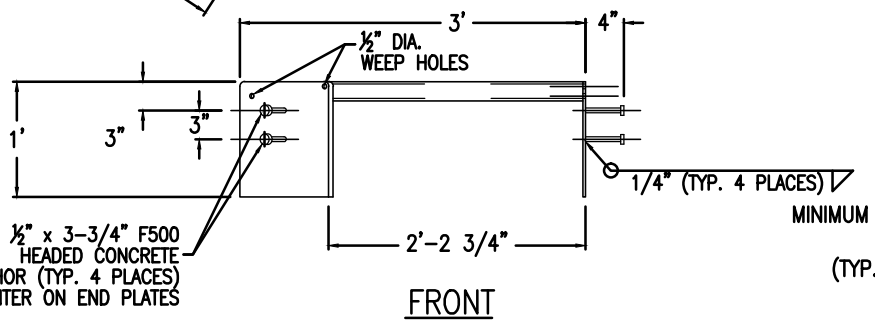

FRONT

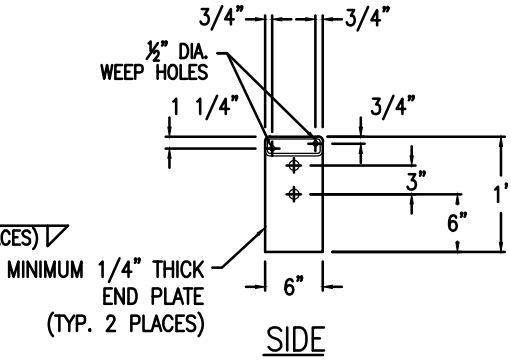

SIDE

- DRAWING NOT TO SCALE -

STORMWATER MANAGEMENT MANUAL TYPICAL DETAILS

- Green Streets -

Modified Metal Inlet Assembly

Curb Inlets

Bureau of Environmental Services

NUMBER

SW-334

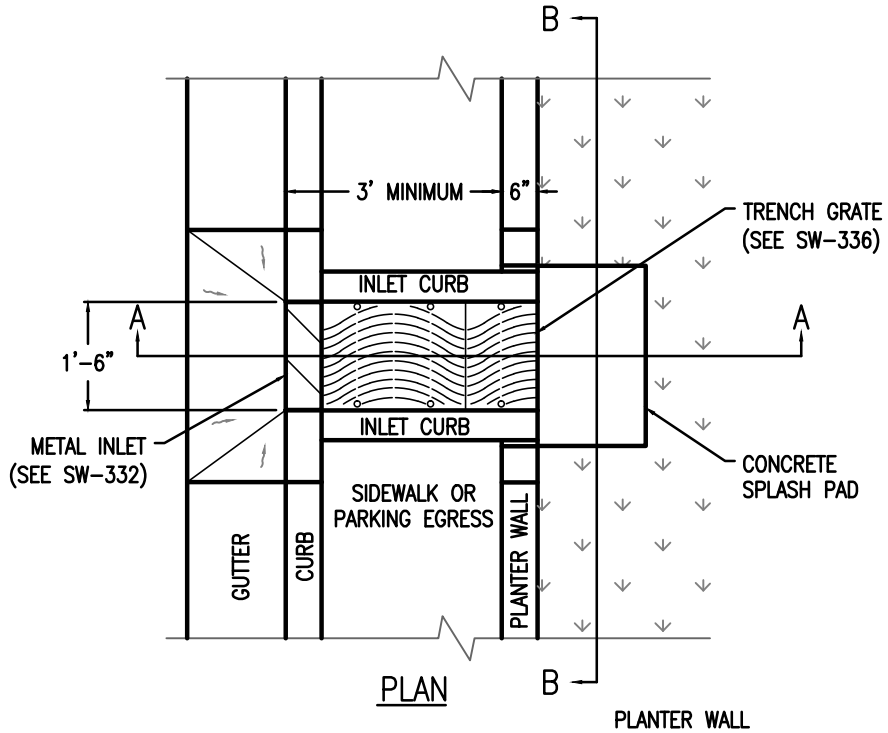

PLAN

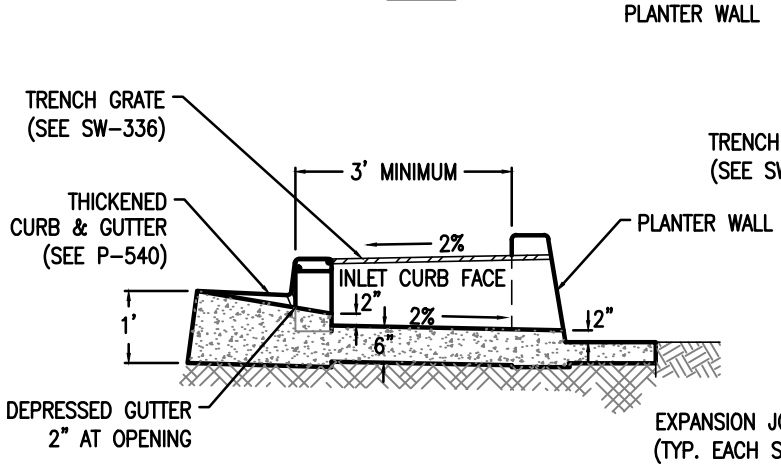

SECTION A-A

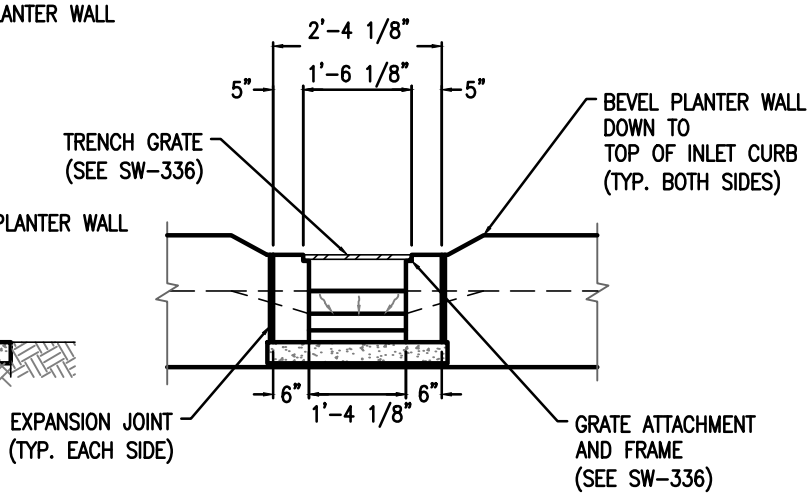

SECTION B-B

- DRAWING NOT TO SCALE -

STORMWATER MANAGEMENT MANUAL TYPICAL DETAILS

- Green Streets -

Channel & Grate Details

Curb Inlets

Bureau of Environmental Services

NUMBER

SW-335

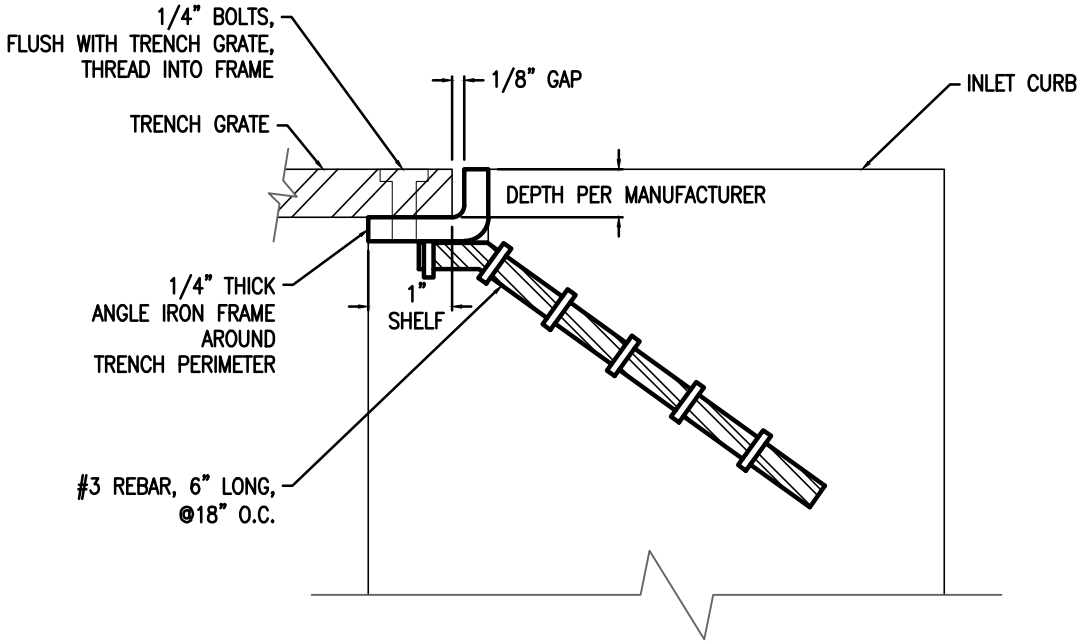

FRAME AND GRATE ATTACHMENT DETAIL

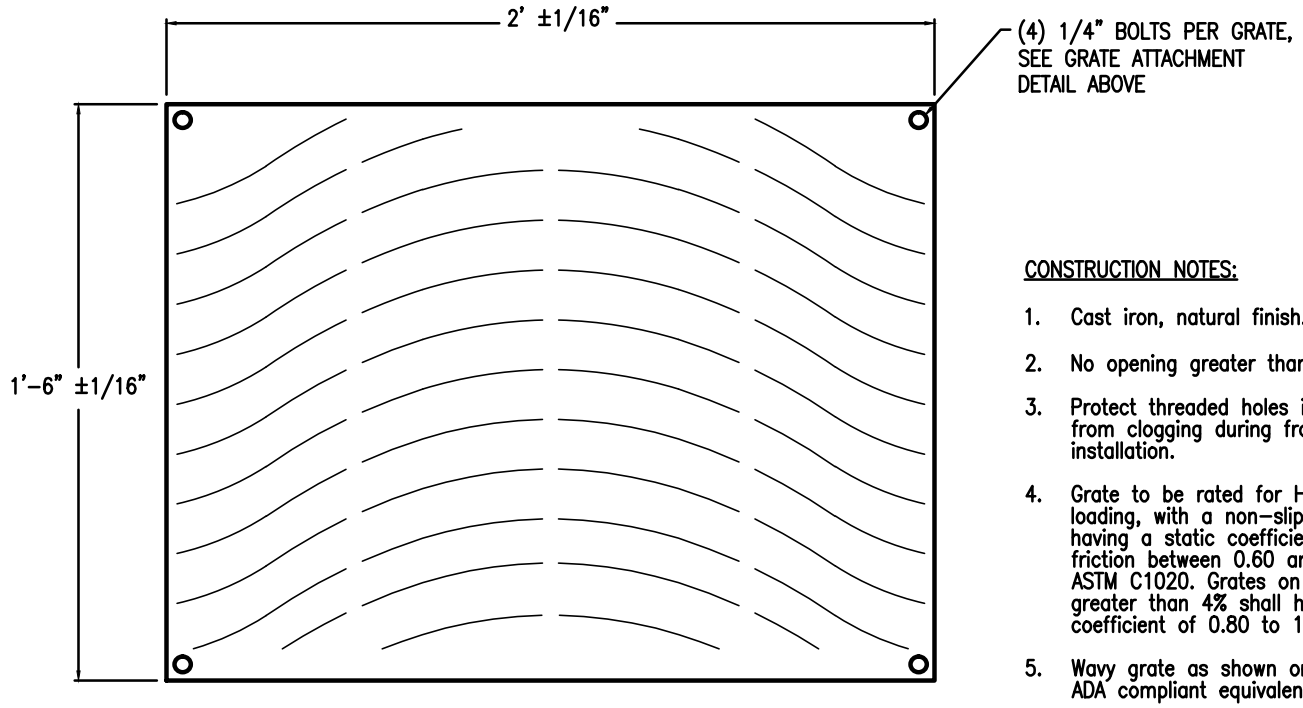

TRENCH GRATE

CONSTRUCTION NOTES:

1. Cast iron, natural finish.
2. No opening greater than 3/8".
3. Protect threaded holes in frame from clogging during frame installation.
4. Grate to be rated for H-20 loading, with a non-slip surface having a static coefficient of friction between 0.60 and 1.0 per ASTM C1020. Grates on inclines greater than 4% shall have a coefficient of 0.80 to 1.0.
5. Wavy grate as shown or approved ADA compliant equivalent.

- DRAWING NOT TO SCALE -

STORMWATER MANAGEMENT MANUAL TYPICAL DETAILS

- Green Streets -

Grate & Frame Details

Check Dams

Bureau of Environmental Services

NUMBER

SW-336

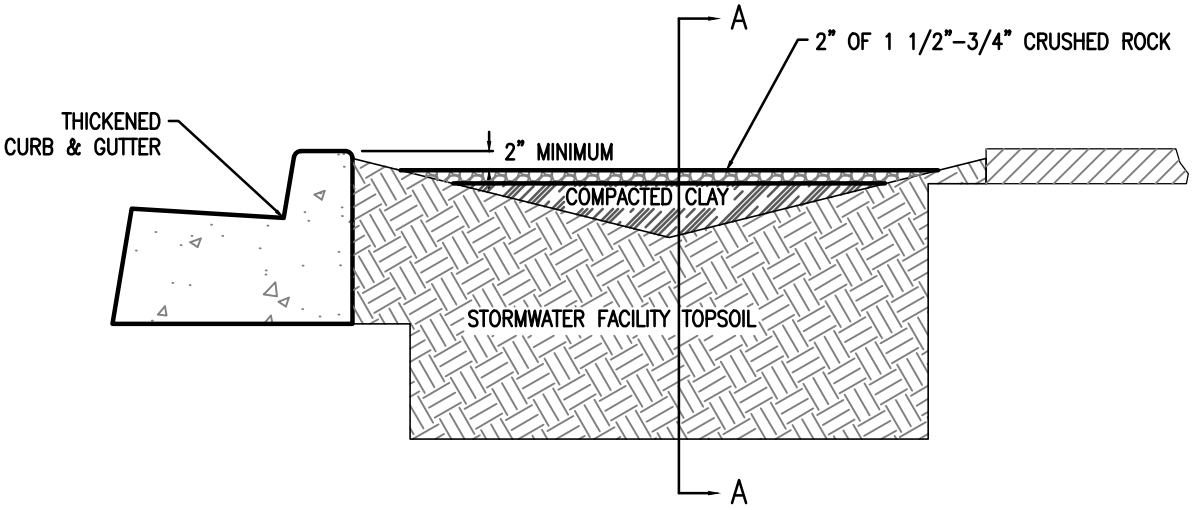

TYPICAL SWALE SECTION

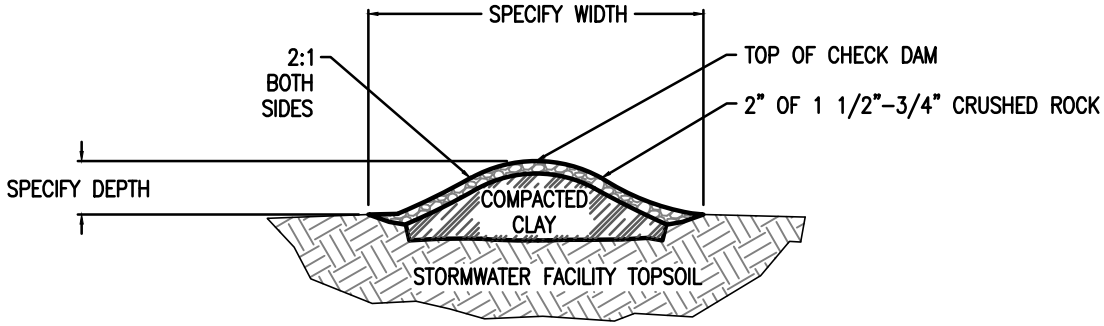

SECTION A-A

DESIGNER INFORMATION

1. Rock check dam for use in swales and curb extensions with side slopes.
2. Specify check dam elevation and width.
3. Provide stationing and/or dimensioning for check dams.
4. Hand tamp topsoil directly under check dam.
5. Key clay core into stormwater facility topsoil.

CONSTRUCTION NOTES

1. Hand tamp topsoil directly under check dam.
2. Key clay core into stormwater facility topsoil.

- DRAWING NOT TO SCALE -

STORMWATER MANAGEMENT MANUAL TYPICAL DETAILS

- Green Streets -

Rock Check Dam for Swales

Check Dams

Bureau of Environmental Services

NUMBER

SW-340

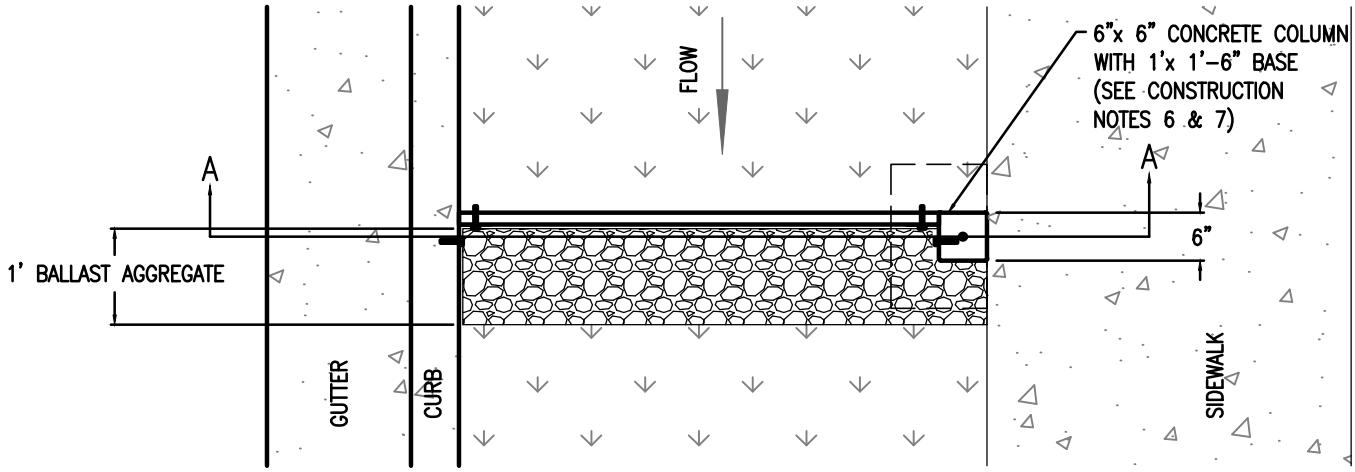

PLAN

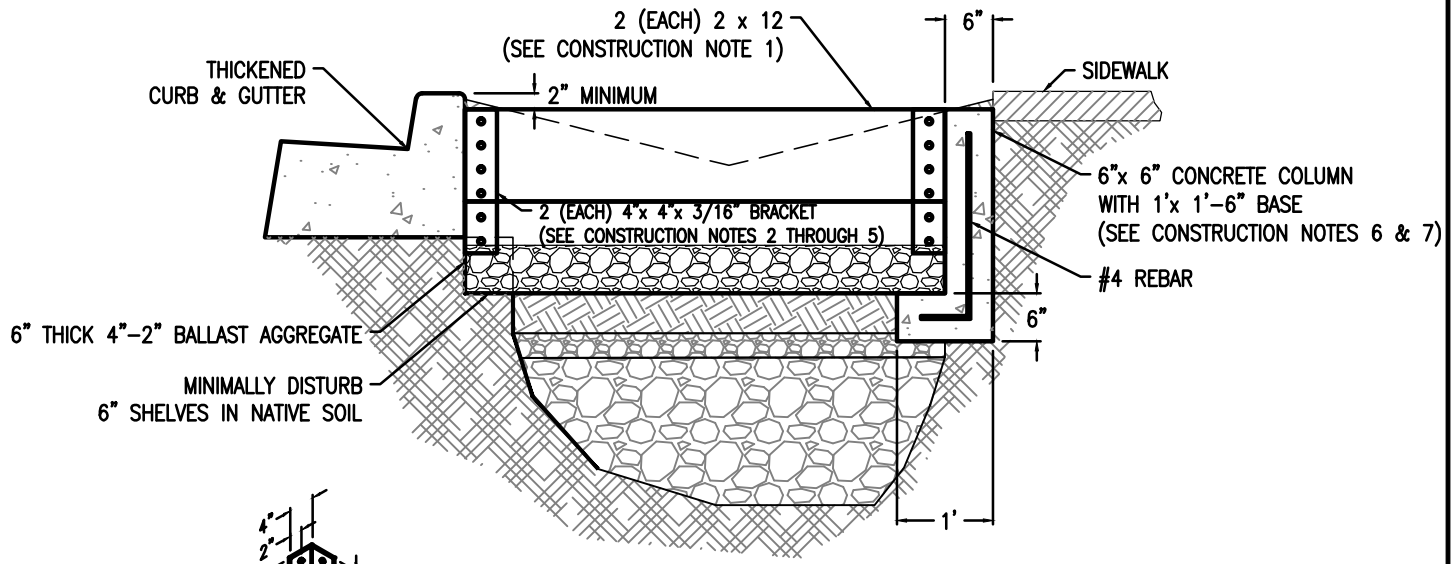

SECTION A-A

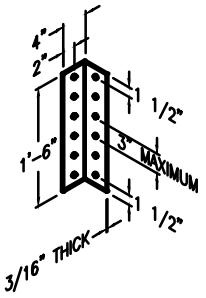

BRACKET DETAIL

DESIGNER INFORMATION

1. Provide elevations and stationing and/or dimensioning for check dams.
2. Ensure that check dam elevations do not cause stormwater to overflow to sidewalk.

CONSTRUCTION NOTES

1. Lumber to be a naturally rot-resistant wood (e.g. cedar). Manufactured products can be used with approval. No chemically treated wood will be allowed.
2. All fasteners to be stainless steel or aluminum.
3. 4"x 4"x 18" angle bracket, minimum 3/16" thick, stainless steel, or aluminum.
4. Top of bracket to be no higher than top of check dam.
5. Minimum 5/16" dia. bolts, 3 bolts into concrete, 2 bolts into each board
6. Construction grade concrete to be 3000 psi.
7. Base of column is 12"x 18" and 6" thick

- DRAWING NOT TO SCALE -

STORMWATER MANAGEMENT MANUAL TYPICAL DETAILS

- Green Streets -

Wooden Check Dam for Swales

Check Dams

Bureau of Environmental Services

NUMBER

SW-341

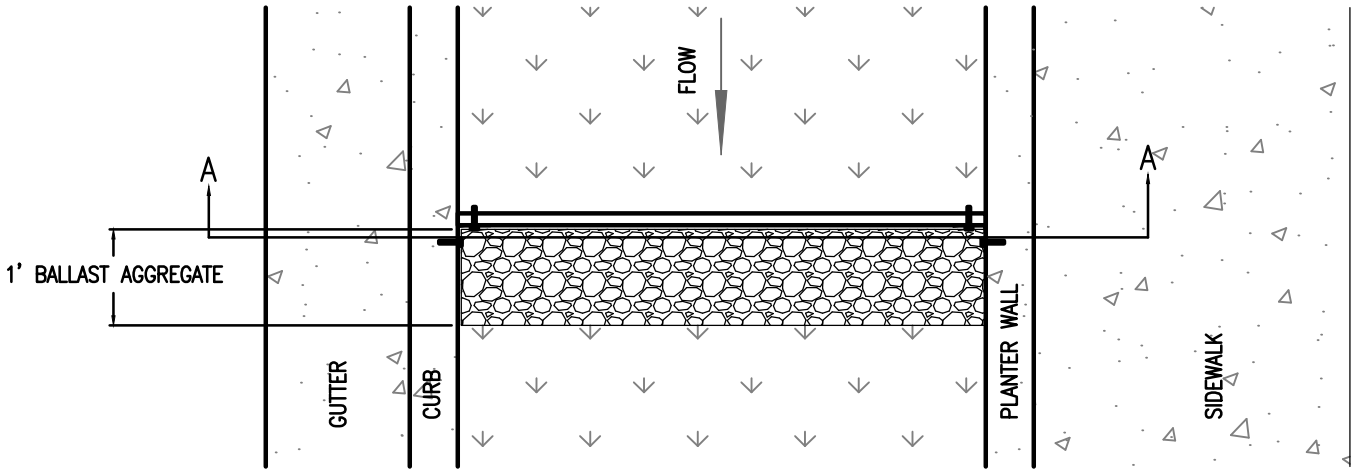

PLAN

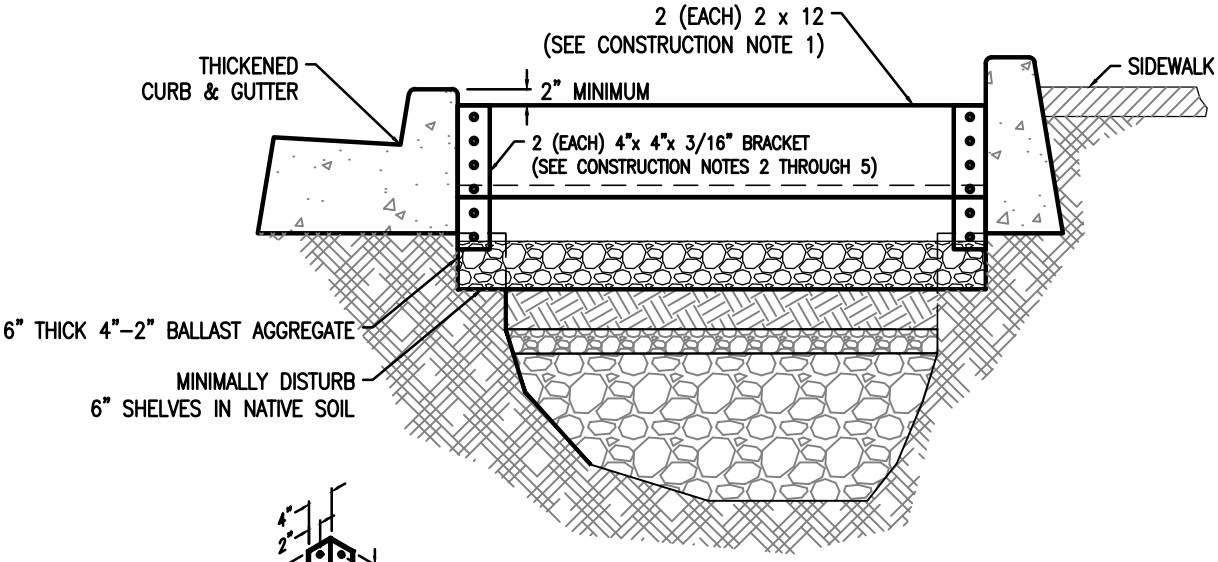

SECTION A–A

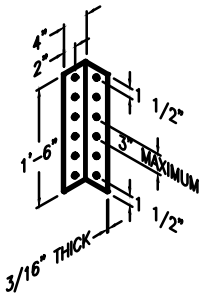

BRACKET DETAIL

CONSTRUCTION NOTES

1. Lumber to be a naturally rot–resistant wood (e.g. cedar). Manufactured products can be used with approval. No chemically treated wood will be allowed.
2. All fasteners to be stainless steel or aluminum.
3. 4"x 4"x 18" angle bracket, minimum 3/16" thick, stainless steel, or aluminum.
4. Top of bracket to be no higher than top of check dam.
5. Minimum 5/16" dia. bolts, 3 bolts into concrete, 2 bolts into each board

DESIGNER INFORMATION

1. Provide elevations and stationing and/or dimensioning for check dams.
2. Ensure that check dam elevations do not cause stormwater to overflow to sidewalk.
3. For use in planters and curb extensions.
4. Cannot be used with an L–shaped planter wall.

– DRAWING NOT TO SCALE –

STORMWATER MANAGEMENT MANUAL TYPICAL DETAILS

– Green Streets –

Wooden Check Dam for Planters

Check Dams

Bureau of Environmental Services

NUMBER

SW–342

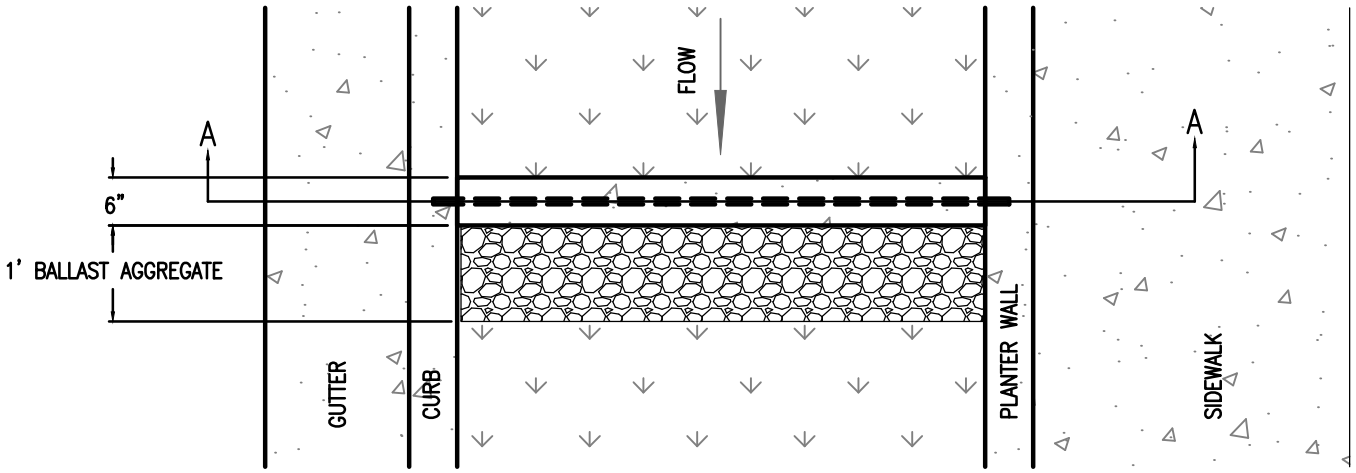

PLAN

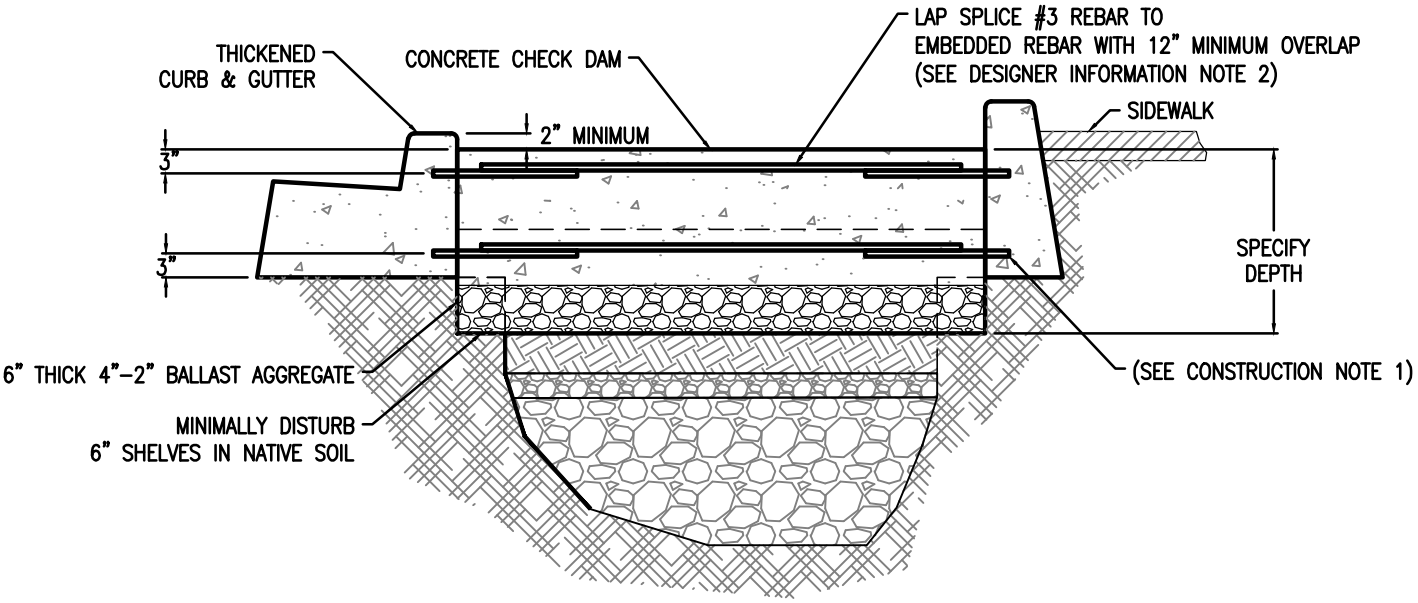

SECTION A–A

DESIGNER INFORMATION

1. Provide elevations and stationing and/or dimensioning for check dams.
2. Ensure that check dam elevations do not cause stormwater to overflow to sidewalk.
3. For use in planters and curb extensions.
4. For check dams that span longer than 12' specify rebar overlap length.
5. Show planter wall embedded in existing sub–grade or drain rock.

CONSTRUCTION NOTE

1. Embed #3 rebar 3" into curb and 3" into planter wall.

– DRAWING NOT TO SCALE –

STORMWATER MANAGEMENT MANUAL TYPICAL DETAILS

– Green Streets –

Concrete Check Dam for Planters

Check Dams

Bureau of Environmental Services

NUMBER

SW–343

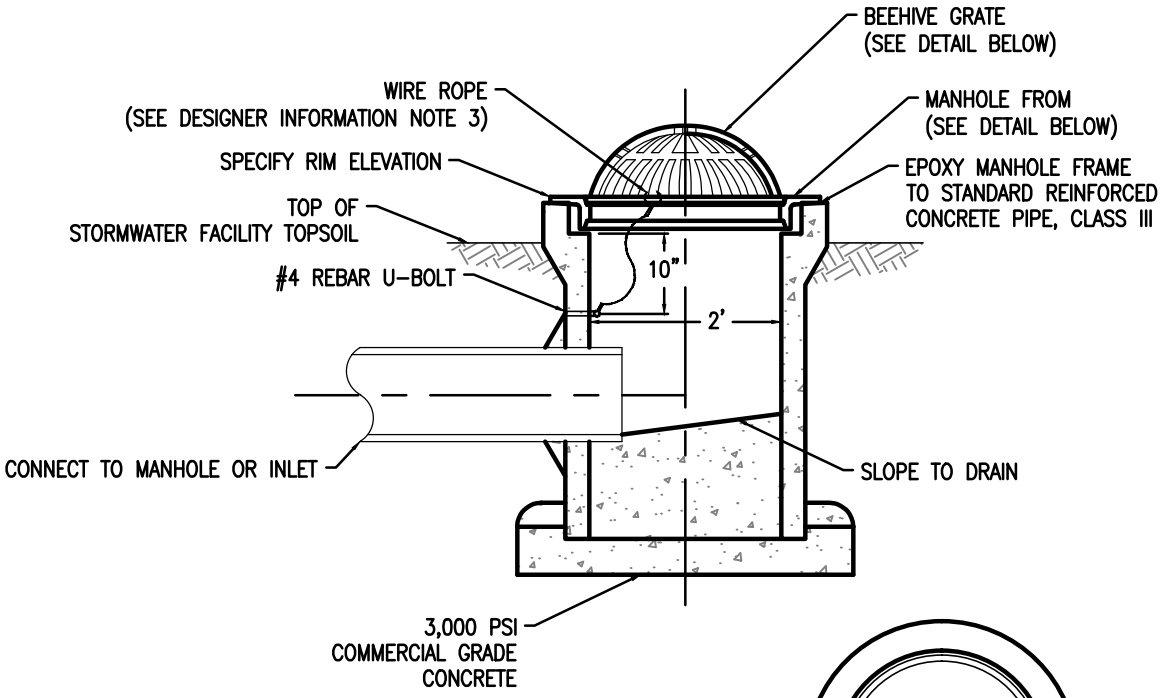

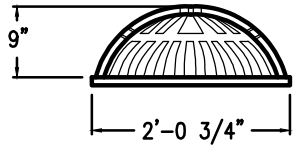

BEEHIVE GRATE

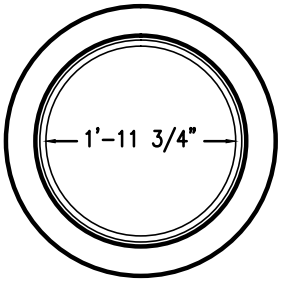

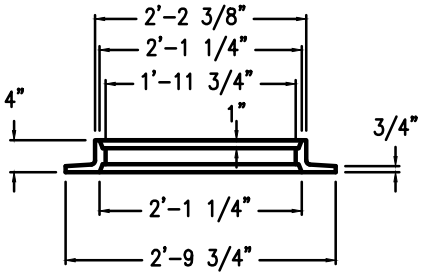

24"x4" REVERSIBLE MANHOLE FRAME

DESIGNER INFORMATION

1. If connecting to a combination sewer main install a flapper valve or approved equal to prevent odor emissions.
2. Size inlet based on calculated flows & manufacturers recommendations.
3. Wire rope between 1/8"–3/16" diameter, stainless steel, 7 strands of 19 wires.

CONSTRUCTION NOTES

1. Secure grate in place with 54" of wire rope. Loop ends of wire rope around U–bolt and grate. Crimp each end of wire rope with 3" overlap.
2. Drill 2" deep holes into pipe and epoxy #4 rebar U–bolt (2"x 4") in holes.
3. Grate to be cast iron, ASTM A48 CL30.

– DRAWING NOT TO SCALE –

STORMWATER MANAGEMENT MANUAL TYPICAL DETAILS

– Green Streets –

Beehive Inlet Grate

Overflow Inlets

Bureau of Environmental Services

NUMBER

SW–350

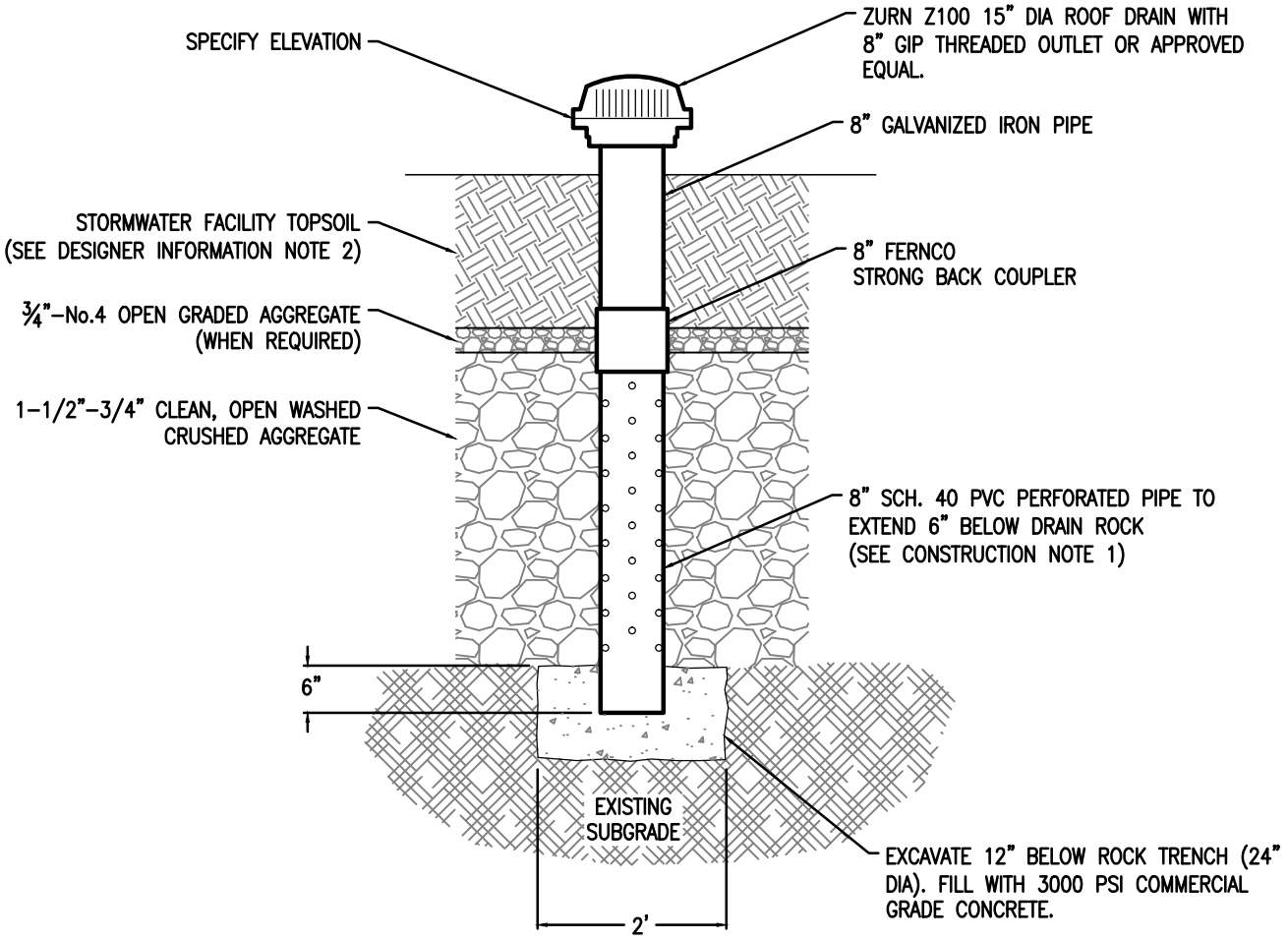

DESIGNER INFORMATION

1. Show overflow drain in swale, planter or curb extension section. Separate swale, planter or curb extension section views may not be needed.

2. Dimension stormwater facility soil and rock layers per your design. See sections SW–301, SW–312 and SW–322.

CONSTRUCTION NOTE

1. Perforate 8" Schedule 40 PVC with ½" holes, 90° degrees around pipe, rows 2" apart. Offset holes in rows by 45°.

– DRAWING NOT TO SCALE –

STORMWATER MANAGEMENT MANUAL TYPICAL DETAILS

– Green Streets –

Overflow Drain

Overflow Inlets

Bureau of Environmental Services

NUMBER

SW–351

CONSTRUCTION NOTES

1. ADHERE 30 MIL LINER TO CONCRETE WITH TOP COAT TC MOLDABLE SEALANT, OR APPROVED EQUAL.
2. SECURE LINER TO CONCRETE WITH 2" ALUMINUM FLAT BAR, PLACED AS DIRECTED (CURB SIDE OR ENTIRE FACILITY).
3. ATTACH FLAT BAR WITH CONCRETE HIT ANCHORS, 24" O.C.
4. TRIM EXCESS LINER TO THE TOP OF THE FLAT BAR.

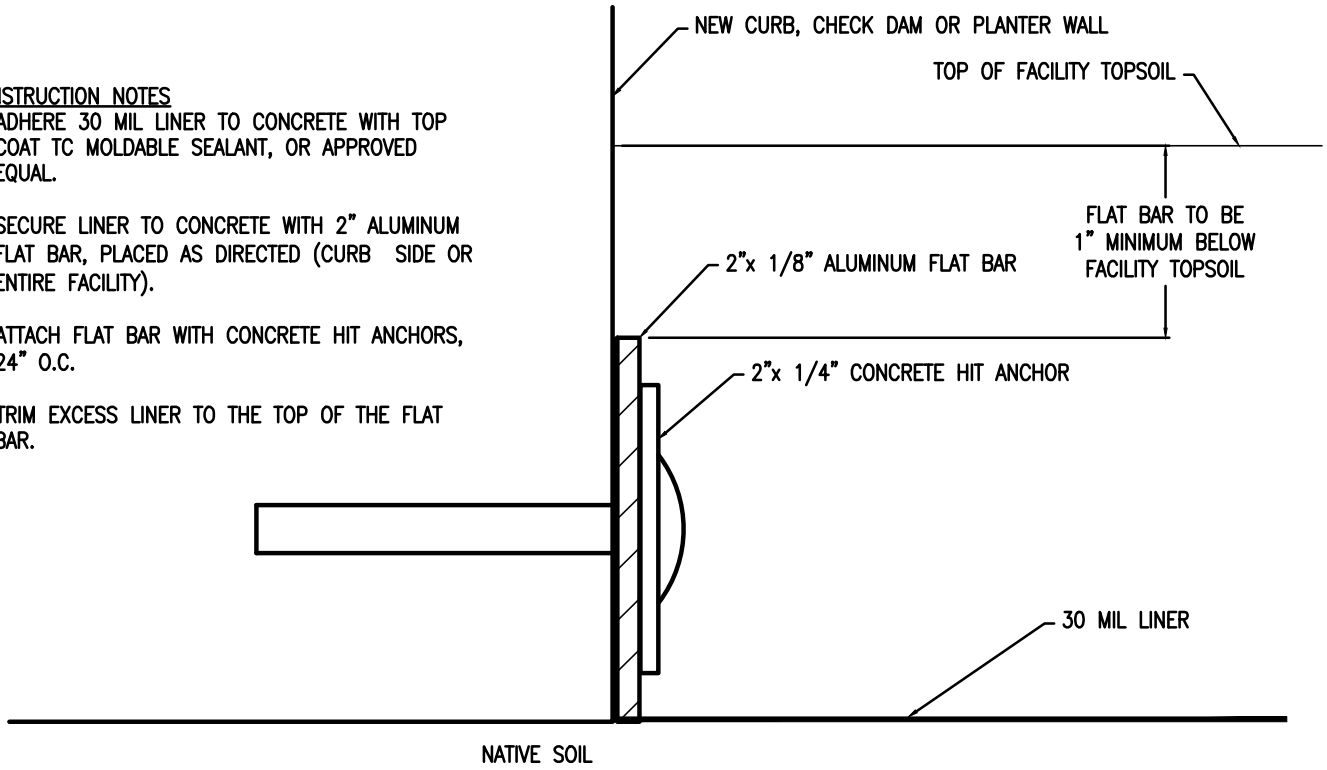

LINER ATTACHMENT

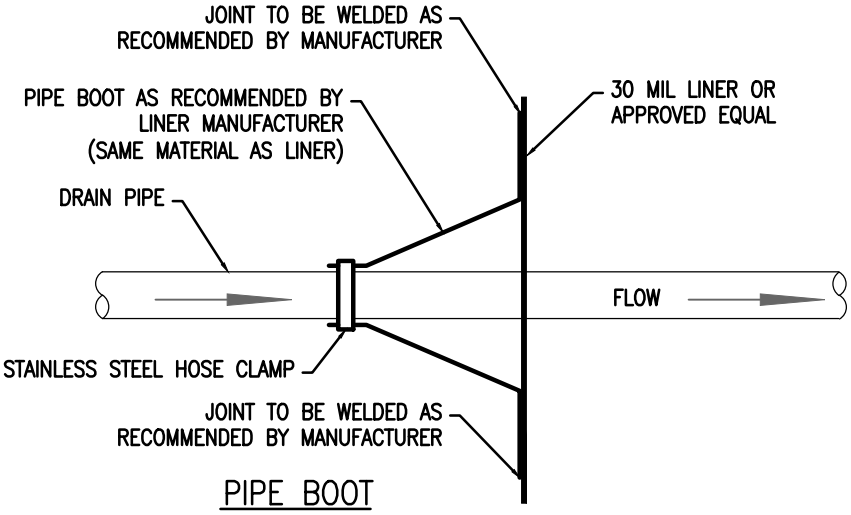

PIPE BOOT

DESIGNER INFORMATION

1. Liner materials to be HDPE or PVC. Liner to extend from top of topsoil to the bottom of excavation.
2. 3" of concrete is required on all sides of attachment. Adjust sidewalk depth as necessary.
3. Liner required when face of new curb is less than 2' from OD of adjacent water main.
4. Liner required on neighborhood collectors and higher street classifications.
5. Liner may be required on local streets with transit routes, higher traffic volumes, or when a facility is adjacent to travel lane at the discretion of the City Engineer.
6. In the Columbia South Shore Well Field Wellhead Protection Area or areas with contaminated soils the facility must be completely lined with a 40 mil liner unless facility' s bottom and sides are monolithic concrete.
7. Liners may be required near basements or other underground structures.
8. Trees allowed in lined facilities only at the discretion of City of Portland staff.

– DRAWING NOT TO SCALE –

STORMWATER MANAGEMENT MANUAL TYPICAL DETAILS

– Green Streets –

Liner Attachment & Pipe Boot Detail

Miscellaneous

Bureau of Environmental Services

NUMBER

SW–360