CONTENTS: PAGE:

1.0 SCOPE 1

2.0 MATERIALS REQUIRED 1

3.0 INSTALLATION REQUIREMENTS 5

4.0 DOCUMENTATION REQUIRED 11

1.0 SCOPE

This section covers standards for Instrumentation that are applicable for all design, construction and installation projects for the City of Portland (COP), The Bureau of Environmental Services (BES), Wastewater Group (WG), including the Columbia Blvd. Wastewater Treatment Plant, Tryon Creek Wastewater Treatment Plant and the Wastewater Pump Stations maintained by the Group. The requirements put forth in the sections and standards listed below shall be considered part of the requirements of this section. If contradictions occur, the requirements of this section shall have precedence when performing work on materials and equipment covered by this section.

2.0 MATERIALS REQUIRED

2.0.1 PAINTING

Do NOT paint instruments, instrument valves, or identification tags, or mounting nuts, bolts and / or screws.[1]

2.1 TUBING[2]

316 stainless steel tubing shall be used. Where appropriate for vibration isolation, connect with 12” to 18” Swagelok push-on multipurpose hose of the appropriate size. Polyethylene tubing may be used in process & control panel cabinets and in wetwells on captive air bells.

In all control panel cabinets where tubing is run, the tubing shall not be run with or attached to wires.

2.1.1 COLOR FOR TUBING USED ON CAPTIVE AIR ASSEMBLIES

Red poly tubing shall be used on the ANALOG captive air device and **clear** poly tubing shall be used on the PLC captive air device.

[1] Rev.2003
[2] Section Rev.2003

2.2 FITTINGS

2.2.1 FITTINGS USED ON PROCESS MEASUREMENT AND CONTROL PIPING

Fittings shall be Instrument grade stainless steel, Cajon brand, or approved equal.[3]

2.2.2 FITTINGS USED ON PROCESS MEASUREMENT AND CONTROL TUBING

Swagelock stainless steel process Instrument tube fittings shall be used. For Swagelok push-on multi purpose hose use Swagelok hose end connections. No substitutes. Do not intermix fittings. This is a safety issue. (Documentation on fitting incompatibility is available.)[4]

2.3 ISOLATING PRESSURE INSTRUMENTS FROM THE PROCESS FLUIDS

Where possible, **1:1** ratio pneumatic pressure transducers, manufactured by Paper Machine Components (P.M.C.) of Danbury, Connecticut (or approved equal), shall be used. Use of liquid primed signal lines such as ISO rings, diaphragm sealed pressure gauges and diaphragm seals with capillary tubing[5] **is discouraged and will require approval by the E&I Department.**

2.4 PROCESS SIGNALS

Electronic process signals shall be 4-20 mA DC. When a signal enters a panel, it shall be dropped across a 250-ohm resistor to provide a 1-5 volt signal for use by all 1-5 volt devices in the panel. Use a precision 250 ohm (+/-) 0.1% resistor (Mills resistor part #MRP03W 250 ROB.)[6]

2.4.1 FAIL SAFE ALARMS

Process signals/circuits used for alarming or critical control shall be designed such that when power is lost, (i.e. broken wire, blown fuse, etc.) an alarm is sounded.

Pneumatic process signals shall be 3-15 PSI.

2.5 TERMINAL BLOCKS

2.5.1 BLOCK TYPES

---

[3] Rev.2003
[4] Rev.2003
[5] Rev.2003
[6] Rev.2003

Terminal blocks shall be **single** stack only, 35-mm symmetrical din rail mount. Provide Phoenix UK-4, or approved equal.
DIN rail must be 35-mm symmetrical, where used.[7]

Provide at each control panel, a terminal block (Phoenix Contact UK 5-MTK-P/P) for Analog loops. This allows access to the current loop without lifting wires and **does not** need an integral silicon diode.
NOTE: These terminal blocks are provided with recessed connectors to receive meter test leads.

2.5.2 TERMINAL STRIP & BLOCK LABELING[8]

Terminal strip layout and terminal strip numbering is based on the index (equipment) or instrument loop numbers. Arrange the terminal strips in a logical order. Start with the smallest loop/index number in the upper left, incrementing as you go down the vertical din rail. Numbering should increment from the bottom of the din rail on the left to the top of the din rail to it's right.

Terminal block numbering starts at one end and increments sequentially. See example on the following page.

[7] Rev.2003 Also Section 16910 2.6.3
[8] Section Rev. 2003

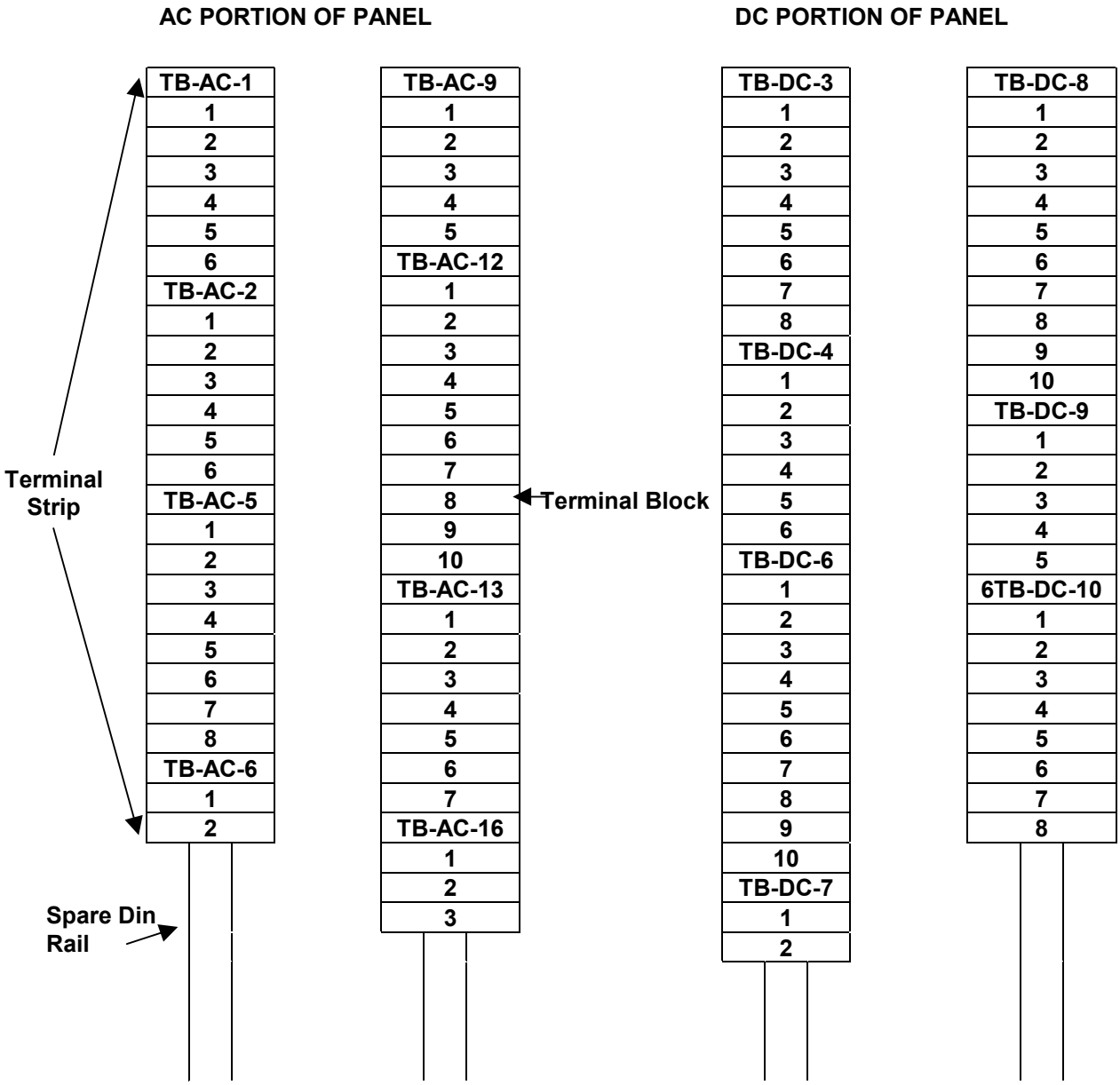

Use Phoenix contact terminal blocks.

- UK4 Terminal Block
- D-UK 4/10 End Cover
- USLKG5 Ground Terminal Block
- UK4-TG Base Terminal Block
- ST-BE Component Plug
- ST-K4 Disconnect Plug
- ST-SILED 12-UK4 Fuse Plug
- ST-SILED 24-UK4 Fuse Plug

- ST-SILA 250-UK4 Fuse Plug
- UK5-MTK-P/P Knife Disconnect Terminal Blocks
- E/NS 35N Universal End Bracket
- KLM-A Terminal Strip Marker
- UK5-HESI Fuse Block*

*Where needed for higher amps. The UK5-HESILA250 has a current rating of 12 Amps except if it is used as a switching device, then the rating is 6.3 Amps.

2.6 FUSE HOLDERS

Provide din rail mounted fuse holders with integral "blown fuse" indicator. Appropriate fuse holders for circuit voltage.[9]

2.7 RTDs

All RTDs shall be **100-ohm platinum,** and at least three conductors will be connected from the sensor to the Instrument.

2.8 TEMPERATURE INSTRUMENTS

Capillary-type sensors **are not** to be used.

2.9 CAPACITANCE INSTRUMENTS

The use of capacitance type of instruments is discouraged and **will require the approval of the E&I Department prior to use.**

3.0 INSTALLATION REQUIREMENTS

3.1 LENGTHS OF STRAIGHT PIPE REQUIRED FOR FLOW METERS

All flow meters shall be installed with the manufacturer's recommendation for length of upstream and downstream pipe diameters of straight pipe.

3.2 CALIBRATION

The contractor shall calibrate, test and document each system in its entirety, in addition to placing all completed systems in operation (including tuning loops and any final adjustments to instruments as required during start-up) to the satisfaction of the Engineer or his representative. All calibration and tuning shall be witnessed and approved by a city employee designated by the Engineer.

[9] Rev.2003

Analog instruments shall be tested and documented to be in calibration at 0%, 25%, 50%, 75% and 100% of range (within the stated accuracy of manufacturer). Start-up calibration and approved data sheets shall be supplied for all instrumentation.

Parameter lists are required for all instruments requiring setup or programming.

3.3 MOUNTING

3.3.1 EQUIPMENT MOUNTING

Instrument(s) shall be located so that the instrument, and any associated equipment, is readily accessible for removal or maintenance without moving another device, or having to use temporary climbing devices. Place all instruments at 4 ½ feet above finished floor (AFF) to the centerline of the instrument[10], unless otherwise specified.

Instruments with primary elements (sensors) shall be installed with isolation valves so that they can be isolated from the process and removed without disturbing the process. These instruments shall also have calibration 'tees' that will enable the introduction of a simulated process variable (after the instrument has been isolated from the process), so that the instrument may be calibrated without being removed (magnetic flow meters are exempted). A pressure-equalizing valve is required for systems that measure differential pressure.

Primary elements need to be installed with enough flex to be removed from the process <u>without disconnecting any wiring</u>. (Such as, but not limited to; insertion flow elements, pH probes, ORP probes, Ultrasonic transducers, radar transducers, and magnetic flow tubes – up to 12".)[11]

3.3.2 ULTRA-SONIC TRANSDUCER MOUNTING

Ultra-sonic sensors used to measure distance shall be connected with enough length of flexible conduit, and installed in such a way that the sensor can be removed from its mounting and aimed at a target without disconnecting the sensor wiring.

3.3.3 LOCATIONS <u>NOT</u> ALLOWABLE FOR MOUNTING INSTRUMENTS

Instruments shall be installed so they can be worked on without the technician being able to come in contact with voltages greater than 120vac. This means that instruments may **NOT** be installed in VFDs, cabinets with disconnects, etc.

[10] Rev.2003
[11] Rev.2003

3.4 INSTRUMENT WIRING

3.4.1 RACEWAYS FOR INSTRUMENT AND COMMUNICATIONS WIRING[12]

Where possible (such as in buildings, tunnels, and walkways) instrument and communications wiring and fiber optics shall be run in enclosed cable tray. These conductors and fibers must be laid in, not pulled in.

Do not run instrument, fiber, or communications wiring in raceways that contain conductors carrying voltages over 30 volts.

3.4.2 CONDUCTORS AND CABLES[13]

All electrical conductors shall be stranded copper wire. 25% extra control conductors shall be installed.
All spare conductor ends shall be landed on compression terminal blocks and identified as spare conductors.

3.4.3 CONDUCTOR COLOR CODING[14]

For conductors, provide all single conductors with integral insulation pigmentation using the following coloring system:

SYSTEM	GROUND	NEUTRAL	PHASE A	PHASE B	PHASE C
120/240 1 phase, 3 wire	green	white	black	red	
All 24 VDC **or less** inside control cabinet			positive red	negative purple	
120 VAC inside control cabinet	green	white	Control power-black		

3.4.3.1 CONDUCTOR IDENTIFICATION[15]

Identify and tag power and control conductors (10 AWG or smaller) and control cables at each termination, consistent with associated drawings. Tags shall be legible, permanent sleeves of heat shrinkable, cross-linked, flexible polyolefin with machine printed back marking. Tags relying on adhesives or taped-on markers are not acceptable.

---

[12] Also Section 16050 2.1.8
[13] Also Section 16050 2.2
[14] Also Section 16050 2.2.1
[15] Also Section 16050 2.2.2

Tags shall be Kroy shrink tubing (P/N 2404220) used with Kroy label / printer TM650[16], Raychem, Brady, or equal. All circuit identification tags shall be readily accessible for inspection at termination points.

Excluded from the identification system are: (1) circuit breaker terminations at the distribution panel, and (2) terminations at lighting fixtures and receptacles. See section 16010 for details on how the numbers are to be derived.

3.4.4 ROUTING OF INSTRUMENT WIRING

No instrument wiring shall be run with conductors carrying voltages of 30 volts or greater. Take care to route these two types of conductors away from each other in control panels and in separate raceways.

3.5 CABLES[17]

3.5.1 SHIELDED CABLE GROUNDING[18]

Ground the shield only at the ground nearest the power supply that provides power to the conductors (or the majority of the conductors). Insulate the shield where the possibility exists of the shield shorting to ground. Where a circuit is part of more than one shielded cable, continue the ground of the cable nearest the power supply to the shield of each succeeding cable.

3.5.2 INSTRUMENT CABLE[19]

- Single Pair: Cables used to connect instrument systems shall be individual 18 AWG stranded copper[20] conductors twisted into a single pair, paired assembly covered with an aluminum-polyester shield with tinned copper drain wire, with overall 35-mil PVC jacket rated 90 degrees C minimum. Provide cables with **red and black**[21] and /or black and white color coding. When connected, black shall be negative and ***white or red*** shall be positive. Outer diameter shall be 0.28 inch maximum. Install 25% extra twisted pair.

- Multiple Pair: Provide cables with individual stranded copper conductors twisted into pairs, individually covered with an aluminum-polyester shield and a tinned copper drain wire twisted along the outside of the shield. The conductor bundle shall be shielded with an overall aluminum polyester shield with a tinned copper drain wire. The outer jacket shall be 40-mil minimum PVC rated at 600V, 90 degrees C minimum. Provide Type 1,

[16] Rev.2003
[17] Also Section 16050 2.3
[18] Also Section 16050 2.3.1
[19] Also Section 16050 2.3.2
[20] Rev.2003 Also Section 16050 2.3.2
[21] Rev.2003 Also Section 16050 2.3.2

Instrumentation cable (600 Volt, Multi-Twisted Shielded Pairs with a common overall shield.)

600 V Twisted, Shield Pair, Instrument Type TC[22]

Belden Trade#	Conductor/Pair Count	Strand Count	Nominal O.D. (in.)
Pairs			
9341	1	19	0.276
1048A	2	7	0.381
1049A	4	7	0.498
1050A	8	7	0.654
1051A	12	7	0.785
1052A	16	7	0.898
1053A	24	7	1.115
1054A	36	7	1.299
1038A	50	7	1.527
600 V Shielded Triad, Instrument Type TC			
Triads			
1121A	1	7	0.292

3.5.3 INSTRUMENT CABLE COLOR CODE[23]

SYSTEM	GROUND	NEUTRAL	PHASE A	POSITIVE	NEGATIVE
All 24 VDC **or less** inside control cabinet				red	purple
120VAC inside control cabinet	green	white	control power-black		
Foreign voltage inside control cabinet			pink		
Twisted Shielded Pair				red or white	black

3.5.4 CONTROL CABLES[24]

Tray cable that is used for control of electrical circuits (discrete only) shall be a minimum of #14 AWG, stranded copper. With the individual conductors having a THWN or XHHW-2 insulation rated at 600 volts. Cable shall be UL type TC.

[22] New 2003 Also Section 2.3.2.1
[23] Rev.2003 Also Section 16050 2.3.2.1
[24] Section Rev.2003 Also Section 16050 2.3.3

Any conductors used for power transmission rather than control shall be derated as required by the current adopted NFPA-70 NEC. (Such as Belden.)

3.5.5 INTERNAL CABINET WIRING AND WIRING TO A PLC OR ASSOCIATED CARD[25]

All wiring shall be stranded copper. Internal cabinet wiring may use MTW wire. PLC's and associated cards may use 20 gauge provided the NEC ampacity is not exceeded. Field wiring from the field device to a terminal board within the PLC cabinet shall be minimum 14 gauge. (This includes discrete instruments, not analog.)[26]

3.5.6 INSTALLATION OF INSTRUMENT CABLES (Multi-Conductor, 600V, 18 AWG, shielded.)

Process signal cables shall be terminated per the following:

1. Strip outside jacket and foil back a minimum[27] of 4" from end of the cable.
2. Install a 1-inch (1") section of heat shrink tubing to overlap insulation and jacket.
3. If the shield wire is not connected (as in the field end of a cable), it should be cut off and insulated so that the shield does not show at the end. If the shield wire <u>is</u> connected, install clear tubing (such as Tygon R-3603) or heat shrink that is snug fitting.[28]
4. Install wire markers, heat shrink and connect.

3.5 POWERING INSTRUMENT LOOPS

The city ***strongly*** prefers that field instrumentation and controls be operated from a 24 VDC (nominal) power source and be loop powered.

Each instrument shall be powered by a separately fused circuit, unless they are in the same loop and the instruments are loop powered. (Typically, a 2-wire system.)[29]

Instruments, or instrument power supplies, not provided as part of a manufactured system must be powered from their own breaker. This means that they cannot be powered by an MCC bucket circuit or similar means.

Where practical, the dry contacts of all instruments shall be powered from an individually fused circuit (more than one fuse is not required per instrument and more than one

---

[25] Also Section 16050 2.3.3.1
[26] Rev.2003
[27] Rev.2003
[28] Rev.2003
[29] Rev. 2003

instrument loop is not allowed on a single fuse). Where at all possible, the instrument contacts shall be fed by a 24-volt DC power supply.

EXAMPLES: See Drawing examples for 24VDC.

3.7.1 INSTRUMENTS - CURRENT TRANSFORMER[30]

For Power Monitors, use molded bar or donut-type current transformers, with 0.3 accuracy at burden imposed by meters and instruments; furnish shorting-type terminal boards for all current transformer leads.
For **all** other current measurements use 4-20maA output Nielson Kuljian Transformers.

4.0 DOCUMENTATION

4.1 GENERAL[31]

These are the major types of electrical drawings that are required (where applicable) for each job:

- P&ID - shows all process control equipment in three levels.
  This drawing is designed and used in the preliminary engineering phase in planning out the control strategy, and in all other phases along with the process narrative to understand the control strategy. This drawing is revised as necessary through out the project.

  - The P&ID is drawn according to ISA standards by drawing a “bubble” for each device, control function, or operator control. Loop numbers shall increase from left to right. P&ID drawings will have three levels, they are:

  - Field - shows all devices used to measure and control the process that are not part of the PLC or the Operator Interface. Examples of these bubbles would be sensors, limit switches, and control valves.

  - PLC/Controller - shows the control functions done by a PLC or a Loop Controller. Examples of the bubbles would be, PID control, alarm signaling, and discreet control. All analog input and outputs shall be shown with their instrument tag numbers.

  - Operator Interface - The same as hard instruments with a bubble and tag numbers for each function.

[30] Also Section 16480 2.7.2
[31] Rev.2003 Also Section 16010 4.1

P&ID's shall be provided per ISA S5.1. This drawing is delivered to the E&I manager upon completion for acceptance at each major design review.

- Loop drawings - shows all instruments in a loop, wiring connections, and the control parameters. See section 17100 4.2.1 for Loop DWG specs.
  .
  - Loop drawings are used to understand and to troubleshoot the loop. This drawing will be developed during the design phase of the project and before the construction drawings.

  - Loop drawings shall be provided for all instrument systems per ISA S5.4. Loop drawing shall be provided on 11x17 inch sheets and shall be legible and easy to read. Only **one** loop shall be included on a sheet, however if necessary, one loop may be drawn on more than one sheet.

- Electrical schematics - shows the electrical circuit in a logical flow of operation. Does **not** show all connection details or equipment location.

  - Electrical drawings are used to troubleshoot the circuits.

  - Electrical drawings will be developed during the design phase of the project before the construction drawings.

4.1.1 INSTRUMENT LOOP DRAWINGS

The Instrument Loop Drawings is a composite representation of the Instrument Loop information. It contains all associated electrical and piping connections.
An Instrument Loop Drawings shall comply with the following:

1. Drawings shall be divided into sections with vertical dashed lines, as necessary. The sections are "FIELD", "FIELD JUNCTION" and "PANEL". If there are instruments in the vertical sections that are in different locations, these may be shown by dividing the vertical sections with horizontal dashed lines and location information**.** See drawing examples.
2. Calibration information and Manufacturers name shall be in the lower left section, in an even line, with the title block. See drawing examples.
3. Instrument Loop Drawings shall be on 11x17-inch paper.
4. Each set of Loop Drawings will be supplied with sheet showing each symbol used and an English language description of that symbol. See drawing examples.
5. Only one Loop per Loop sheet, though more sheets may be used to show the loop if necessary. See drawing examples.
6. Pictorial information will be shown when it will clarify location, calibration or process. See drawing examples.
7. Word description of the Loop functions will be shown within the title. If not adequate, use a supplemental note. Identify any special features or functions of shutdown and safety circuits.

8. An indication of the interrelationship to other Instrument Loops, including overrides, interlocks, cascaded set-points, shutdowns, and safety circuits shall be made.
9. Reference other Loop numbers that share common discrete components.
10. All point to point interconnections with identifying numbers of electrical cables, conductors, pneumatic multi-tubes and individual pneumatic and hydraulic tubing shall be shown. This identification of interconnections includes junction boxes, terminals, bulkheads, ports and grounding connections.
11. Indicate insulation colors on conductors in a cable.
12. Use solid lines for all electrical conductors and symbols.
13. Every Instrument bubble will include a device identifier and loop number as well as any suffixes.
14. Provide specific location of each device such as: elevation, area, panel subdivision, rack or cabinet number with location, the I/O location, etc.
15. Show all sources of energy for the devices shown such as electrical power, air supply, and hydraulic fluid supply. Identify voltage, pressure, and other applicable information. For electrical sources, identify circuit or disconnect numbers.
16. Show process lines and equipment sufficient to describe the process side of the loop and provide clarity of control action. Include what is being measured and what is being controlled.
17. Include process source, designation, and flow direction in the Loop Diagram.
18. Actions of fail-safe positions (electronic, pneumatic, or both) of control devices such controllers, switches, control valves, solenoid valves and transmitters (if reverse acting). These are to be identified in accordance with **ISA-S5.1, INSTRUMENTATION SYMBOLS AND IDENTIFICATION.**
19. Provide all software reference numbers. Include information on the PLC, PLC rack, slot, terminal number, PLC register, etc.
20. Signal ranges and calibration information including set-point values for switches, alarms, and shutdown devices shall be provided.
21. Provide the instrument manufactures name for each instrument.

4.1.2 LABEL AND TAG ATTACHMENT [32]

In general, labels and tags will be permanently attached to the device specified in such location as to be easily read during normal operation of the device. Panel labels will be smoothly attached to the panel with no overlaps, protrusions, or sharp edges and corners. Laminated plastic or phenolic labels will be attached with permanent adhesive. Printed plastic self-adhering labels must be applied in a craftsperson- like manner and will never be applied over existing phenolic labels. Stainless steel tags for field instruments will be attached to the conduit, right at the instrument, using stainless steel wire sufficient to keep the tag from being unintentionally removed.

4.1.3 REAR ACCESS OF CONTROL PANEL DOORS[33]

[32] Rev.2003 Also Section 16010 2.6.3
[33] Also Section 16010 2.6.4

Where there is access to rear connections of any front panel mounted component, an additional label shall be affixed adjacent to the component at the rear of the panel to carry the tag number or reference symbol of the component. This label must be of a permanent nature. Use Kroy or equal.

4.1.4 INSTRUMENT WIRE NUMBERS[34]

Wire numbers for Instrument Loops shall be as W-XXXX-YY-ZZ, where:

- W is either a Z (Position) or S (Speed). This is only to be used for position or speed of a final control element. In all other cases skip the W and proceed with wire numbering as shown above without the leading "W-".
- XXXX is a four-digit Loop number. Leading zero's are not used.
- YY is a sequential number that begins with one at the first instrument and increments each time the electrical potential changes. When an I/I is in the loop, skip 2 numbers before starting the numbering on the output of the I/I. On the output side of the loop YY starts with 20 and increments each time the electrical potential changes. Leading zero's are not used.
- ZZ is the designation of the terminal block that the wire lands on. This number is different at each end of the wire. The purpose of this number is so that when the wire is disconnected, there will be no doubt as to where it connects.

In Instruments Loops, conductors for analog signals[35] shall be numbered by the convention shown on the preceding page. The conductors for discrete signals[36] shall be numbered by the scheme listed under "CONTROL WIRE NUMBERS".

Wire labels for AC power to an instrument shall have the instrument tag number and then -H or –N for hot & neutral. See drawing example.[37]

Wire labels for DC power from the power supply to the terminal blocks shall be labeled as (+) 24VDC (or whatever the voltage is) and (whatever the voltage is)VDC com
It shall NOT be labeled (–)24VDC! See drawing example.[38]

4.1.5 INSTRUMENT TAG NUMBERS[39]

- Tag numbers shall be constructed by adding the ISA device mnemonic. Refer to ISA table S5.1, Table 1 on figure 2-1. There will be no changes without Instrument Shop approval.[40] The Loop number, and any suffix numbers as mentioned hereafter. Tag numbers shall comply with ISA Standards as explained hereafter.

---

[34] Rev.2003 Also Section 16010 4.2.2
[35] Rev.2003
[36] Rev.2003
[37] Rev.2003 Also Section 16010 4.2.2
[38] Rev.2003 Also Section 16010 4.2.2
[39] Rev.2003 Also Section 16010 4.2.3
[40] Rev.2003

- The Contractor shall obtain a block of loop numbers from the Wastewater treatment plant Instrument Planner. The contractor shall assign tag numbers for each instrument from within that block.
- An Instrument Loop is an instrument or group of connected instruments that measures and / or controls only one variable such as flow or temperature. The initial measurement is made by the primary element. All of the instruments and devices in the loop will have the same base loop number as the primary element. The only exception to this is the application of secondary loops whose primary elements measure the speed or position of a final control element of a primary control loop. A measurement of a VFD speed or control valve position will carry the same loop numbers as the primary loop primary element.[41] A Flow loop senses flow in only one pipe or channel and **does not** sense temperature, pressure, or any other variable. All Instrument Loop numbers will be unique, no two loops will have the same number
- If an Instrument Loop has two or more **parallel** devices that measure or manipulate the same variable, connected to the same indicator, controller or summing device, the transmitters will have the same loop number but they will be suffixed by A, B, C etc. (e.g. FT 100A, FT 100B, FT 100C connected to FIQT 100.)
- If an Instrument Loop has two or more **series** components that are the same, the instruments will be suffixed by -1, -2, -3 etc. e.g., FI 200-1, FI 200-2, FI 200-3. The FI 200-1 will be the first Flow Instrument nearest to the transmitter (as shown on the drawings). The FI 200-2 will be the second Flow Instrument nearest the transmitter etc.

[42]Instrumentation tag:

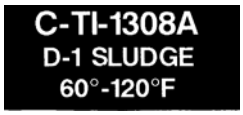

Panel 10
1.0" tape with 3 (or 4) lines of text
Black tape with white lettering
Line 1 at 0.10” - Caps On
Line 2 at 0.08” - Caps On
Line 3 at 0.08” - Caps Off
Line 4 (as needed) at 0.08” - Caps Off

4.1.6 REQUIREMENTS FOR O&M MANUALS[43]

[41] Rev. 2003
[42] Also Section 16010 4.5.1
[43] Also Section 16010 4.5

For electrical equipment, O&M manuals shall meet all the requirements of the "CITY OF PORTLAND DEVELOPMENT GUIDE FOR OPERATION AND MAINTENANCE MANUALS" and the following requirements:

- All materials shall be installed in standard three ring binders.
- O&M Manual shall include the following:
- Equipment Index Table - This table is a page index to all the information in the O&M for each piece of equipment.
- Equipment Information - provide the following for each instrument or piece of equipment. Instruments and equipment provided as a package shall have this information also provided.
- Installation instructions
- Installation Details on all instrumentation field devices
- Maintenance manuals. Original only, (not photocopies and not on CD).[44]
- Shipping and handling instructions
- Outline dimensions
- Spare parts list
- Catalog and other identifying information for each type of device including designation of manufacturer, type, and model. Ratings of coils, contacts, switches, push buttons, etc., shall be clearly identified to verify specification compliance. The sheets provided shall only show information for one piece of equipment, and only the equipment provided.
- Drawings:
- P&ID
- Loop
- Electrical
- PLC I/O
- Construction
- Conduit
- Physical Installation
- Elevation
- Power distribution
- MCC elevation - each MCC shall be documented individually and shall have a table listing the bucket, its use, and its rating.
- Data sheets - Fill the data sheets out with as much meaningful information as possible using:
- ISA S20 forms for all instruments, including process measuring switches (pressure, temperature, etc.).
- Similar type data sheet for all other equipment including VFD's.
- Provide all configuration and programming documentation of programmable equipment on the manufacturer's parameter or program sheets. This includes all programmable instruments (example: mag meters, Milltronics level transmitters,

[44] Rev. 2003

controllers, etc.) and all programmable electrical equipment (example: VFD's, soft starts, etc.).[45]

- A list of all electrical loads for the project. Give the name of the load (example: Sewage Pump #1), the full load rating listing; hp., amps, volts, and the phases.
- Test reports.
- Copies of circuit breaker time current characteristics.
- Operational description.
- Instrument Index. This index shall be a matrix and **shall include** the following minimum information:
    1. Instrument tag number.
    2. Loop drawing number.
    3. Location and number of the data sheet.
    4. The tab of the manuals for the instrument.
    5. The number of any other drawings of which the instrument is part.

Before receiving payments for more than 75% of the work, the Contractor shall deliver to the Engineer four (4) sets of O & M manuals.

[45] Rev. 2003