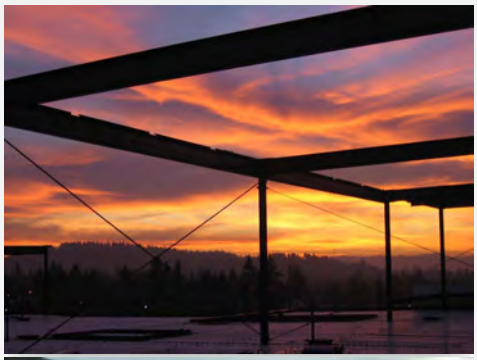

Oregon Clinic

A four-story medical office building, part of the Gateway Transit Center Redevelopment project, a multi-phase, multi-use redevelopment of the approximately 5-acre park and ride lot adjacent to the Gateway Transit Center. The project team established a goal of LEED Silver for the building whose most notable feature is a full building rainwater-harvesting system that provides water for irrigation and all of the building's toilets- a first for Portland-area commercial office buildings.

Project Highlights

- **LEED Silver certification**
- **Municipal water & rainwater capture & use**
- **Low-VOC and recycled materials**
- **Transit-oriented attributes**

Portfolio Contents

- **Final Report**
- **Monitoring & Verification**

Portland Office of Sustainable Development
G/Rated Green Investment Fund

Grantee Final Report

PROJECT INFORMATION

Name of Primary Contact: Renée Worme
Company or Organization: Gerding Edlen Development Company
Address: 1120 NW Couch St., #600
City, State & Zip: Portland, OR 97209
Phone: (503)299-6000 Fax: (503)299-6703
E-mail: renee.worme@gerdingedlen.com

PROJECT DETAILS

Project Name: The Oregon Clinic
Project Owner: Gateway Medical Office Building, LLC
Project Address: 1111 NE 99th Ave.
City, State, ZIP: Portland, OR 97220
Directions to Site: NE 99th & NE Multnomah at the Gateway Transit Center
Date Project Started: June 23, 2005
Date of Completion: September 29, 2006

DESIGN AND CONSTRUCTION TEAM

Architect or Designer/LEED Consultants: GBD Architects
General Contractor: Hoffman Construction Co.
Landscape Architect: Lango Hansen
Structural Engineer: KPFF Consulting Engineers
Civil Engineer: HHPR, Inc.
Mechanical Engineer: Mazzetti & Assoc.
Electrical Engineer: Mazzetti & Assoc.
Energy Modeler: PAE Consulting Engineers

BUILDING DETAILS

Gross Floor Area: Medical Office – 101,299 sq ft.; retail – 1,081 sq ft.

Building Type
[ ] Single-family Residential
[ ] Multi-family Residential
[X] Commercial
[ ] Industrial
[ ] Institutional
[ ] Mixed-Use
[ ] Other (describe)

Site Conditions (check all that apply)
[ ] Previously Undeveloped Land
[X] Previously Developed Land
[ ] Brownfield Site
[ ] Preexisting Structure(s)

Project Type
[ ] Renovation
[X] New
[ ] Addition

GREEN PRODUCTS AND MATERIALS:

Rainwater Harvesting and Reuse

The project includes a 20,000 gallon (15,000 gallons usable) underground storage tank for rainwater collection and reuse to reduce the annual rainfall runoff from the building site by 82%. Rainwater from the roof is gravity fed to the underground storage tank. The collected rainwater is pumped from the underground tank through a 0.5 micron bag filter, an ultra violet filter, and into a 400 gallon indoor atmospheric storage tank. From the indoor storage tank, a booster pump supplies water for irrigation and toilet flushing demand.

Reuse of rainwater for toilet flushing reduces potable water demand for building sewage conveyance by over 60%.

Stormwater Management

The Oregon Clinic uses a water reuse system to capture and use stormwater runoff from the roof area. This harvesting captures 100% of the storm for this area. The remainder of the site (non-roof area) is treated using a Stormfilter water quality device. Runoff from the parking areas and building will be treated using a Stormwater Management 48" Storm Manhole with three filter cartridges.

Low-flow fixtures

80% water savings over a base building through low-flow fixtures:
Water Closets - 1.6 gallons per flush
Urinals - 1 gallon per flush
Hand Sink – 0.5 gallons per minute
Please see attached cut sheets

GREEN VENDORS AND SUPPLIERS USED

Board and batt insulation – Owens Corning
Joint Sealers – Dow Corning
Glazing – PPG
Metal toilet compartments – Interior Technology
Steel joists – Canam Steel Corporation
Structural steel – Nucor, Steel Dynamics
Concrete stain – Retro Paint
Misc. Metals – Nucor, Oregon Steel Mills, Gerdau
Rough carpentry – Weyerhauser
Finish Carpentry – GLVeneer, Dooge Veneers, Brooks Millwork, Medite, M Bohlke Veneer
Casework – Wilsonart, Formica, Nevamar, Roseburg Forest Products
Insulation – John Mansville, Roxul, Fernley
Hollow metal doors – Stiles
Curtainwall – Kawneer
Acoustical ceiling tile – Armstrong
Steel glass canopies – PPG, Dow Corning, SAPA
Carpet tile – Interface
Paint and coatings – Miller Paint
Tackboard – Mahram, Hamasote

PROJECT HIGHLIGHTS

• High-efficiency lighting design
• High-efficiency domestic hot water system
• Increased wall insulation throughout the building
• High performance windows and glazing maximize interior daylight while reducing heat transfer
• Building commissioning to verify and ensure that the entire building is designed, constructed, and calibrated to operate as intended
• Interior recycling and sorting facilities
• Recycled over 95% of construction waste materials
• Preference given to materials that contain recycled content and that are manufactured/extracted locally
• Low-flow/ultra low-flow kitchen and bath fixtures
• Zero irrigation landscaping
• Rainwater harvesting for toilet flushing
• Specified low-toxicity building materials and finishes (carpet, paint) to prevent persistent off-gassing

• Walk-off mats at main building and parking garage entries to reduce indoor air pollutants
• CO2 monitoring throughout the building
• Eco-roof to reduce stormwater runoff and mitigate the urban heat island effect
• Full-service bicycle commuter locker room including showers, lockers, and secured bicycle storage
• Environmentally-appropriate landscaping with drought-tolerant and native species
• No potable water is used for irrigation
• No ozone depleting refrigerants used in building cooling system
• Compliance with dark sky requirements to reduce light pollution

PROJECT COSTS

Land Acquisition:	$570,000
Site Clearing/Deconstruction:	$100,000
Site Development:	$700,000
Design Fees:	$2,105,180.76
Permits:	$501,366.00
System Development Charges:	$176,869.00
Construction:	$21,159,871.00
Green Technologies:	$64,000 (this is only the LEED soft costs)
Other Costs:	$6,212,637.33
Total:	$31,589,924.09

PROJECT COST BY MEASURE

Rainwater Harvesting & Re-Use
- Materials/Equipment Cost: $78,100
- Associated Labor Costs: $62,800

Stormwater Management
- Materials Cost - $15000
- Equipment Cost - $1700
- Associated Labor Costs - $1700

Low-flow Fixtures
- Materials Cost: $18,931
- Associated Labor Costs: $15,855

FINANCIAL SAVINGS AND BENEFITS

Annual Energy Hard Cost Savings over a Base Building:
- Lighting: $9,645
- Space Heating: $6,165
- Space Cooling: $1,365
- Hot Water: $564
- Approximate Total: $18,000

Cost Savings for Rainwater Re-use: $1,856 annually
Water Hard Cost Savings and/or Cost Tradeoffs: None
Sustainable Business Energy Tax Credit: $183,945

ENVIRONMENTAL BENEFITS

Annual or Modeled Energy Savings (beyond code): 25.06% beyond a baseline building
Annual CO2 Emissions Savings: 101,020 lbs of CO2 saved compared to a baseline building
Annual Water Savings (beyond code): 42% potable water, 63% wastewater
Construction Waste Diversion: Over 95%,

Total Tonnage of Waste: 47.17 tons, 45.7549 tons were recycled
Annual Reduced Rainwater Runoff: 82%

COMMUNITY BENEFITS

The Oregon Clinic has many benefits to both the users of the building and the land it inhabits, for example:

- The rainwater reuse reduces the impact on the sewer system in the area and protects our streams and rivers
- Over 20% efficiency in the building reduces total energy consumption and green house gas emissions
- Lots of natural light in public spaces enhances employee and patient comfort
- New landscaping enhances the visual appeal to passersby and provides a habitat for other living things
- No urea-formaldehyde and low-VOC finishes increase employee and patient comfort
- Increased awareness of the benefits of green building

DESIGN & CONSTRUCTION

Pre-Design

During the pre-design phase, one of the goals put forth by the client was to achieve LEED Silver certification. Ongoing operating cost savings were important to the client, as well as having a healthy indoor environment for employees and visitors. The project team presented several paths to achieving the goal of LEED Silver, one of which included a strong emphasis on stormwater management and water reuse in the building. This resulted in on-site infiltration of stormwater, and rainwater harvesting for reuse in toilets and for irrigation.

Design

During the design phase, the focus was on securing hard bids to ensure that they met our cost estimates, as well as securing financial offsets to these costs to the extent possible. Also, research on other rainwater harvesting systems was conducted and presented to the client so that operations and maintenance questions and concerns could be addressed.

Construction

As it pertains to the rainwater harvesting system, during standing sub-contractor meetings and commissioning meetings the status of its construction was routinely reviewed to ensure that the required metering and potable water backups were installed correctly and essentially to ensure the contractors did not encounter any surprises in the field.

Operation and Maintenance

The building has not been in operation long enough to evaluate this category. Currently, the building is undergoing commissioning, which is a third party verification process to ensure that the entire building is designed, constructed, and calibrated to operate as intended. Commissioning is very complex and challenging, yet absolutely critical to project success.

IMAGES AND GRAPHICS

Please see attached images and graphics.

BUILDING CERTIFICATION

The Oregon Clinic is currently under review by the USGBC. The goal of the building is to achieve a LEED Gold certification.

LESSONS LEARNED

- The integration of city water was a major learning component. The rainwater detention tank required bypass of city water, so it was key to know exactly how that would be accomplished. City water did kick on at one point, which caused the aerator to burn out the pump due to the overexertion of the

system from the two different water sources. The integration process was not as simple in practice as it was on paper.

- When designing an efficient mechanical system, the after hours needs of the building must be taken into account. Spaces still need to be cooled even when they are not in use. Until a supplemental unit was installed, the system had to run 24 hours a day. The Oregon Clinic is a facility with a lot of special needs, which requires early identification of how to condition space outside of normal operating hours in order to maximize efficiency.

- To figure out energy lighting efficiencies, a thorough understanding of the use of the space is necessary. For example, who needs more light than the typical lighting design and where? It was found that some rooms were under lit for a particular use. Increasing the light to the space does lead to less efficiency, but occupant needs and comfort still need to be met.

- While rainwater can be used to flush toilets in a commercial building, it is more difficult and less common in residential buildings. It would be a huge step to have water reuse in condominium and apartment buildings, because the overall water savings are so high and rainwater reuse has an extremely positive impact on the city wide system.

- Low-flow fixtures are generating big water savings and are still effective.

- Making small changes throughout the process to better the building positively affected the LEED scorecard, which started at Silver and now may achieve Gold.

OREGON
CLINIC

Hillsboro
222

CAUTION
CAUTION
CAUTION

Welcome
OREGON
CLINIC

OREGON CLINIC RAINWATER HARVESTING SYSTEM Date: March 29, 2005

SUMMARY SHEET

Total Annual Rainfall	41.86	inches	
Roof Area	34,000	square feet	
Total Volume	887,272	gallons	
Percent Evaporated	90%		
Total Volume Available	798,544	gallons	
Overflow to Storm	189,078	gallons	
Total Reused	609,466	gallons	
Irrigation Demand	70,230	gallons	100% Demand Met By Rainwater Reuse
Remaining for Toilets	539,236	gallons	
Total Savings	$1,800	/ year	

POTABLE WATER REDUCTION		
Baseline Water Use	1,456,517	gal
Design Water Use	1,381,556	gal
Rainwater Reuse (less irrigaiton)	539,236	gal
Utility Demand	842,320	gal
Percent Reduction	42%	

WASTEWATER REDUCTION		
Baseline Water Use	857,792	gal
Design Water Use	857,792	gal
Rainwater Reuse (less irrigation)	539,236	gal
Utility Demand	318,556	gal
Percent Reduction	63%	

Z5610

1.6 GPF Elongated Wall Hung Water Closet

TAG WC-1

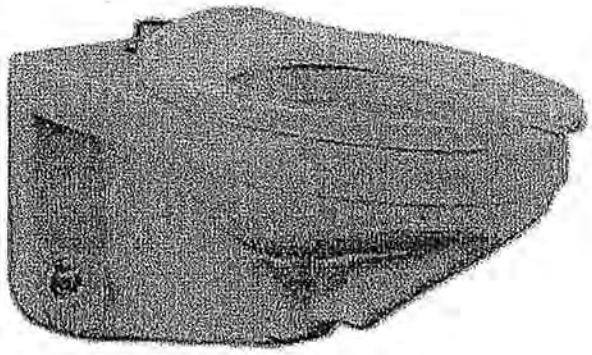

Z5610 Series Elongated

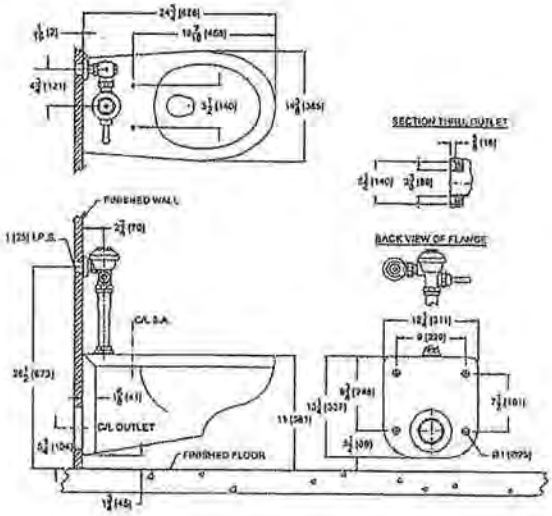

These dimensions and specifications are subject to change without notice.

Fixture dimensions meet ANSI/ASME standard A112.19.2M and CAN/CSA B45 requirements.

Meets the American Disabilities Guidelines and ANSI A117.1 requirements when installed according to these requirements.

Z5610 Series
- 1.6 gpf (gallons per flush)
- Vitreous china
- Elongated front rim
- 2-1/8" fully glazed trapway
- Siphon jet action
- Shipping Weight: 53 lbs.

Engineering Specification:

☑ **Z5610 with Top Spud**
Vitreous china, low consumption, wall hung toilet with siphon jet flush action and elongated front rim with 1-1/2" top spud.

☐ **Z5610-BL with Bedpan Lugs**
Vitreous china, low consumption, wall hung toilet with siphon jet flush action and elongated front rim designed to accommodate a bedpan with 1-1/2" top spud.

☐ **Z5610-RF Retro-Fit**
Vitreous china, low consumption, wall hung toilet with siphon jet flush action and elongated front rim with 1-1/2" top spud. Retro-fit with carrier nuts for applications where carrier bolts don't extend through china's wall flange.

☐ **Z5610-BL-RF with Bedpan Lugs & Retro-Fit**
Vitreous china, low consumption, wall hung toilet with siphon jet flush action and elongated front rim designed to accommodate a bedpan with 1-1/2" top spud. Retro-fit with carrier nuts for applications where carrier bolts don't extend through china's wall flange.

This space is for Architectural/engineering Approval

See Zurn One Systems for suggested packages.

Zurn Plumbing Products Group Commercial Brass and Fixtures Operation
2640 South Work Street · Falconer, NY 14733 · Phone: 716-665-1132 · Fax: 716-665-1135 · www.zurn.com

ZURN®

AquaVantage® AV Model

TAG WC-1 & 2

Exposed Z6000AV Model

For Water Closets

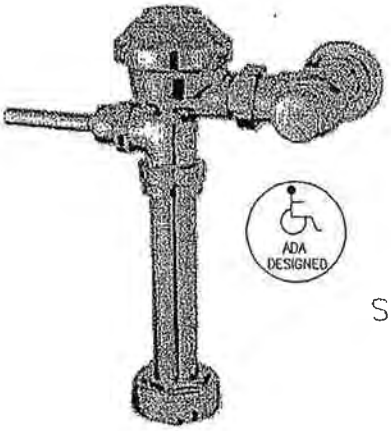

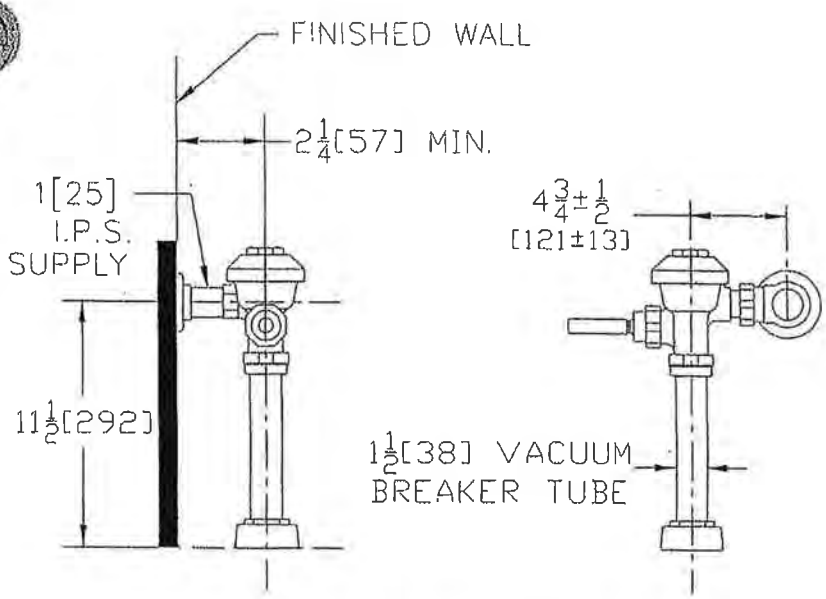

Flow Options

☑	-WS1	1.6 Gal. Low Consumption Flush
☐	-FF	4.5 Gal. Full Flush
☐	Standard Flush	3.5 Gallons Per Flush

Suffix Options (Check/Specify Appropriate Options)

_____	-BG	BioCare Handle
_____	-H	Handle on Front of Flush Valve
_____	-L	1" [25] Metal Push Button
_____	-L3	3" [76] Metal Push Button
_____	-YJ	Split Ring Pipe Support
_____	-YK	Solid Ring Pipe Support
_____	-YO	Bumper on Angle Stop
_____		Other

ENGINEERING SPECIFICATION: ZURN Z6000AV AquaVantage® 'AV' Exposed Closet Flush Valve - Exposed, quiet diaphragm-type, chrome plated flushometer valve with a polished exterior. Complete with Zurn's AquaVantage® TPE, chloramine resistant, dual seal diaphragm with a clog resistant, triple filtered by-pass. The valve is ADA compliant with a non-hold open and no leak handle feature, high back pressure vacuum breaker, one piece hex coupling nut, adjustable tailpiece, spud coupling and flange for top spud connection. Control stop has internal siphon-guard protection, vandal resistant stop cap, sweat solder kit, and a cast wall flange with set screw. Internal seals are made of chloramine resistant materials.

This space is for Architectural/engineering Approval

ZURN INDUSTRIES, INC. • COMMERCIAL BRASS OPERATION • 5900 ELWIN BUCHANAN DRIVE • SANFORD NC 27330
Phone: 1-800-997-3876 • Fax: 919-775-3541 • World Wide Web: www.zurn.com
In Canada: ZURN INDUSTRIES LIMITED • 3544 Nashua Drive • Mississauga, Ontario L4V1L2 • Phone: 905-405-8272 Fax: 905-405-1292

AquaVantage® is a registered trademark of Zurn Industries, Inc.

Rev. D
Dwg. No. 63276

Date: 4/28/03
Product No. Z6000AV

Z5610

1.6 GPF Elongated Wall Hung Water Closet

TAG WC-2

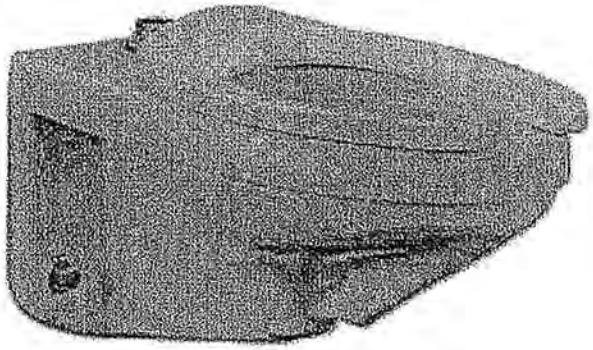

Z5610 Series Elongated

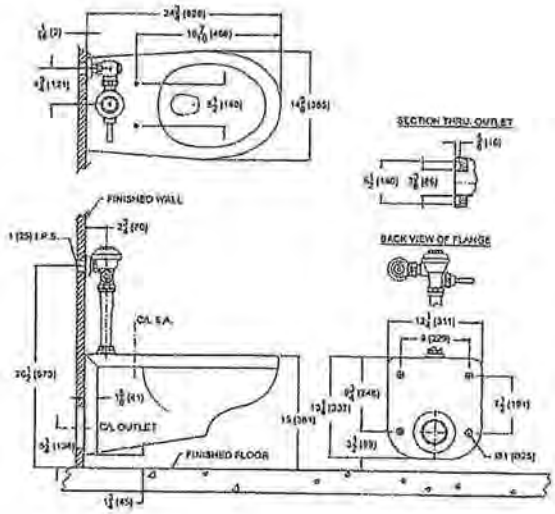

These dimensions and specifications are subject to change without notice.

Fixture dimensions meet ANSI/ASME standard A112.19.2M and CAN/CSA B45 requirements.

Meets the American Disabilities Guidelines and ANSI A117.1 requirements when installed according to these requirements.

Z5610 Series

- 1.6 gpf (gallons per flush)
- Vitreous china
- Elongated front rim
- 2-1/8" fully glazed trapway
- Siphon jet action
- Shipping Weight: 53 lbs.

Engineering Specification:

☑ **Z5610 with Top Spud**
Vitreous china, low consumption, wall hung toilet with siphon jet flush action and elongated front rim with 1-1/2" top spud.

☐ **Z5610-BL with Bedpan Lugs**
Vitreous china, low consumption, wall hung toilet with siphon jet flush action and elongated front rim designed to accommodate a bedpan with 1-1/2" top spud.

☐ **Z5610-RF Retro-Fit**
Vitreous china, low consumption, wall hung toilet with siphon jet flush action and elongated front rim with 1-1/2" top spud. Retro-fit with carrier nuts for applications where carrier bolts don't extend through china's wall flange.

☐ **Z5610-BL-RF with Bedpan Lugs & Retro-Fit**
Vitreous china, low consumption, wall hung toilet with siphon jet flush action and elongated front rim designed to accommodate a bedpan with 1-1/2" top spud. Retro-fit with carrier nuts for applications where carrier bolts don't extend through china's wall flange.

This space is for Architectural/engineering Approval

See Zurn One Systems for suggested packages.

Zurn Plumbing Products Group Commercial Brass and Fixtures Operation
2640 South Work Street · Falconer, NY 14733 · Phone: 716-665-1132 · Fax: 716-665-1135 · www.zurn.com

ZURN®

AquaVantage® AV Model

TAG WC-1 & 2

Exposed Z6000AV Model

For Water Closets

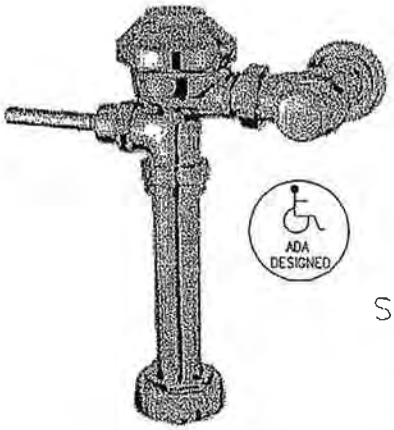

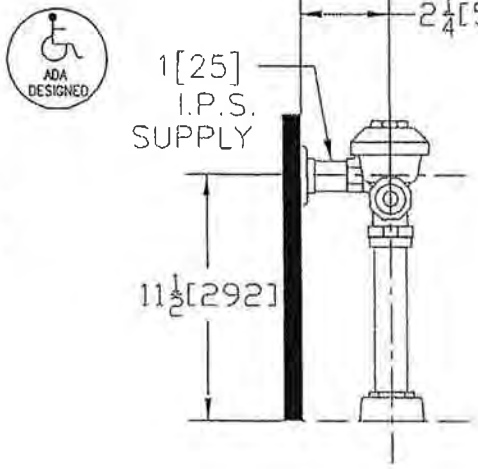

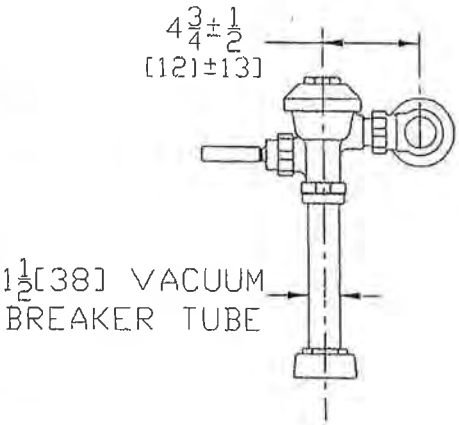

Flow Options

☑	-WS1	1.6 Gal. Low Consumption Flush
☐	-FF	4.5 Gal. Full Flush
☐	Standard Flush	3.5 Gallons Per Flush

Suffix Options (Check/Specify Appropriate Options)

____	-BG	BioCare Handle
____	-H	Handle on Front of Flush Valve
____	-L	1" [25] Metal Push Button
____	-L3	3" [76] Metal Push Button
____	-YJ	Split Ring Pipe Support
____	-YK	Solid Ring Pipe Support
____	-YO	Bumper on Angle Stop
____		Other

ENGINEERING SPECIFICATION: ZURN Z6000AV AquaVantage® 'AV' Exposed Closet Flush Valve - Exposed, quiet diaphragm-type, chrome plated flushometer valve with a polished exterior. Complete with Zurn's AquaVantage® TPE, chloramine resistant, dual seal diaphragm with a clog resistant, triple filtered by-pass. The valve is ADA compliant with a non-hold open and no leak handle feature, high back pressure vacuum breaker, one piece hex coupling nut, adjustable tailpiece, spud coupling and flange for top spud connection. Control stop has internal siphon-guard protection, vandal resistant stop cap, sweat solder kit, and a cast wall flange with set screw. Internal seals are made of chloramine resistant materials.

This space is for Architectural/engineering Approval

ZURN INDUSTRIES, INC. • COMMERCIAL BRASS OPERATION • 5900 ELWIN BUCHANAN DRIVE • SANFORD NC 27330
Phone: 1-800-997-3876 • Fax: 919-775-3541 • World Wide Web: www.zurn.com
In Canada: ZURN INDUSTRIES LIMITED • 3544 Nashua Drive • Mississauga, Ontario L4V1L2 • Phone: 905-405-8272 Fax: 905-405-1292

AquaVantage® is a registered trademark of Zurn Industries, Inc.

Rev. D
Dwg. No. 63276
Date: 4/28/03
Product No. Z6000AV

KOHLER

WC-3

HIGHCLIFF™

BOWL

→ **K-4368**

ADA

FEATURES

- *10" or 12" rough-in*
- *1-1/2" top spud*
- *Vitreous china*
- *Elongated bowl*
- *1.6 gpf*
- *2-1/4" passageway*
- *11-3/8" x 10-3/8" water area*
- *17-1/2" high bowl is ADA compliant*
- *With bedpan lugs (-L)*

CODES/STANDARDS APPLICABLE

Specified model meets or exceeds the following:

- *ADA*
- *ASME/ANSI A112.19.2M*
- *ASME/ANSI A112.19.6M*
- *CABO/ANSI A117.1*
- *Energy Policy Act of 1992 (EPACT)*
- *CSA International B45*
- *IAPMO/UPC*
- *States of Massachusetts, New York, & Texas*
- *City of Los Angeles, CA.*

COLORS/FINISHES

- 0 White
- Other Refer to Fixtures Price Book for additional colors

Accessories:

- 0 White
- Other Refer to Fixtures Price Book for additional colors

SPECIFIED MODEL:

Model	Description	Colors/Finishes	
→ K-4368	Elongated bowl toilet	■0 White	☐Other_____
K-4368-L	Elongated bowl toilet with bedpan lugs	☐0 White	☐Other_____

Recommended Accessories			
K-4670-C	Lustra™ open front seat	☐0 White	☐Other_____
K-4654	Lustra™ open front seat with support arms and cover	☐0 White	
K-4670-CA	Lustra™ open front seat (with anti-microbial agent)	☐0 White	
K-4654-A	Lustra™ open front seat with support arms and cover (with anti-microbial agent)	☐0 White	

PRODUCT SPECIFICATION:

The elongated bowl shall be 10" or 12" rough-in with 1-1/2" top spud. Bowl shall be made of vitreous china. Bowl shall be 1.6 gpf. Bowl shall have 11-3/8" x 10-3/8" water area. Bowl shall have 2-1/4" passageway. Bowl shall be ADA compliant with 17-1/2" high bowl. Bowl shall have bedpan lugs (-L). Toilet shall be Kohler Model K-4368-__0__-_____.

We reserve the right to make revisions without notice in the design of fixtures or in packaging unless this right has specifically been waived at the time the order is accepted.

WC-3

SLOAN®
OPTIMA SYSTEMS

Royal® Model

OPTIMA™ SMO
Battery Powered Flushometers

110-SMO
111-SMO

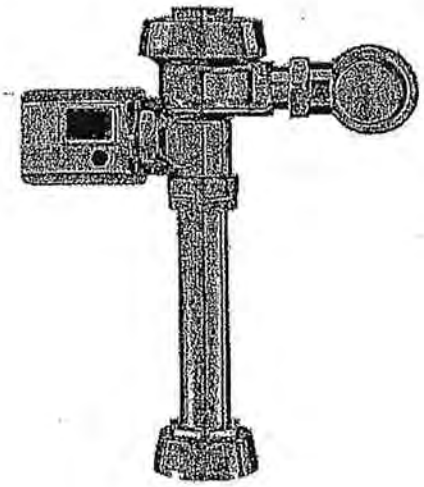

▶ **Description**
Exposed, Battery Powered, Side Mount Sensor Operated Water Closet Flushometer for floor mounted or wall hung top spud bowls.

▶ **Flush Cycle**
☐ 110-SMO Water Saver (3.5 gpf/13.2 Lpf)
■ 111-SMO Low Consumption (1.6 gpf/6.0 Lpf)

▶ **Specifications**
Quiet, Exposed, Diaphragm Type, Chrome Plated Closet Flushometer for either left or right hand supply with the following features:

- PERMEX™ Synthetic Rubber Diaphragm with Dual Filter Bypass
- ADA Compliant OPTIMA® Battery Powered Infrared Sensor for automatic "No Hands" operation
- Chrome Plated Infrared Sensor Housing
- Manual Override Flush Button
- Four (4) Size C Batteries Included
- "Low Battery" Flashing LED with Optional Audio Tone
- "User in View" Flashing LED
- Infrared Sensor Range Adjustment Screw and Reset Button
- 1" I.P.S. Screwdriver Bak-Chek™ Angle Stop
- Free Spinning, Vandal Resistant Stop Cap
- Adjustable Tailpiece
- High Back Pressure Vacuum Breaker Flush Connection with One-piece Bottom Hex Coupling Nut
- Spud Coupling and Flange for 1½" Top Spud
- Sweat Solder Adapter with Cover Tube and Cast Set Screw Wall Flange
- High Copper, Low Zinc Brass Castings for Dezincification Resistance
- No External Volume Adjustment to Ensure Water Conservation
- Flush Accuracy Controlled-by-CID™ Technology
- Diaphragm, Stop Seat and Vacuum Breaker to be molded from PERMEX™ Rubber Compound for Chloramine resistance

Valve Body, Tailpiece and Control Stop shall be in conformance with ASTM Alloy Classification for Semi-Red Brass. Valve shall be in compliance with the applicable sections of ASSE 1037, ANSI/ASME A112.19.6 and Military Specification V-29193. Installation conforms to ADA requirements.

▶ **Variations**
☐ **TP** Trap Primer

See Accessories Section and OPTIMA Accessories Section of the Sloan catalog for details on these and other OPTIMA® Flushometer variations.

▶ **ADA Compliant**

▶ **Automatic**
Sloan OPTIMA SMO equipped Flushometers provide the ultimate in sanitary protection and automatic operation. There is no need for AC hookups or wall alterations. The Flushometer operates by means of a battery powered infrared sensor. Once the user enters the sensor's effective range and then steps away, the Side Mount Unit initiates the flushing cycle to flush the fixture.

▶ **Hygienic**
User makes no physical contact with the Flushometer surface except to initiate the Override Button when required. Helps control the spread of infectious diseases. 24 Hour Sentinel Flush keeps fixture fresh during periods of nonuse.

▶ **Economical**
Automatic operation provides water usage savings over other flushing devices. Reduces maintenance and operation costs. Installation and battery replacement does not require turning off water to the valve.

▶ **Warranty**
3 year (limited)

This space for Architect/Engineer approval

Job Name _____ Date _____
Model Specified _____ Quantity _____
Variations Specified _____
Customer/Wholesaler _____
Contractor _____
Architect _____

The information contained in this document is subject to change without notice.

WC-4

KOHLER

CAMERTON™

SERVICE SINK

→ **K-12867**

FEATURES

- *21-1/2" x 25"*
- *Vitreous china*
- *1-1/2" top spud*
- *Blow-out action flushing rim*

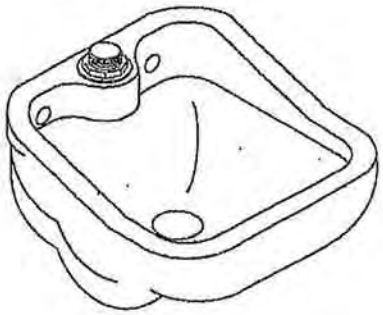

CODES/STANDARDS APPLICABLE

Specified model meets or exceeds the following:

- *ASME/ANSI A112.19.2M*
- *IAPMO/UPC*
- *Canadian Standards Association (CSA)*
- *State of Massachusetts*

COLORS/FINISHES

- 0 White

Accessories:

- CP Polished Chrome
- NA None Applicable

SPECIFIED MODEL:

Model	Description	Colors/Finishes
→ K-12867	Service sink	■0 White
Optional Accessories		
K-13864	Loose sink strainer	□CP
→ K-8935	Stainless steel rim guard	■NA

PRODUCT SPECIFICATION:

The service sink shall be 21-1/2" in length, and 25" in width with a 1-1/2 top spud. Sink shall be made of vitreous china. Sink shall have blow-out action flushing rim. Sink shall be Kohler Model K-12867-_0____.

We reserve the right to make revisions without notice in the design of fixtures or in packaging unless this right has specifically been waived at the time the order is accepted.

Slimline® Bedpan Washer Model Flushometer

BPW-1100
BPW-1100-1.6

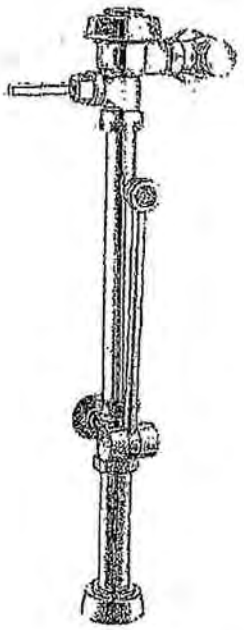

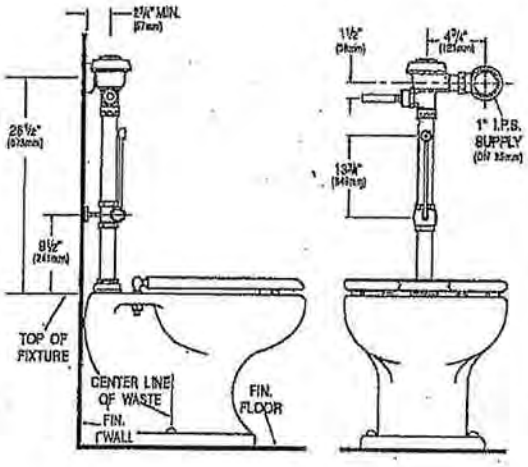

Description

Slimline® Bedpan Washer Water Closet Flushometer, for floor mounted or wall hung top spud bowls. Installation meets ADA height requirements.

Flush Cycle

☐ Model BPW-1100 Water Saver (3.5 gpf/13.2 Lpf)
■ Model BPW-1100-1.6 Low Consumption (1.6 gpf/6.0 Lpf)

Specifications

Quiet, Exposed, Diaphragm Type, Chrome Plated Closet Flushometer with the following features:

- Dual Filtered By-Pass
- Diaphragm, Handle Packing, Stop Seat and Vacuum Breaker to be molded from PERMEX™ rubber compound for Chloramine resistance
- ADA Compliant Metal Oscillating Non-Hold-Open Handle with a Triple Seal Handle Packing
- 1" I.P.S. Screwdriver Bak-Chek™ Angle Stop
- Free Spinning Vandal Resistant Stop Cap
- Adjustable Tailpiece
- High Back Pressure Vacuum Breaker Flush Connection with One-piece Bottom Hex Coupling Nut
- Spud Coupling and Flange for 1½" Top Spud
- Sweat Solder Adapter with Cover Tube and Cast Set Screw Wall Flange

Bedpan Washer Diverter Assembly with the following features:

- Solid One-piece Body Construction
- Solid Brass Spray Arm
- Counter Balanced Pivot Assembly
- Diverter Valve Wall Support

Valve Body, Cover, Tailpiece and Control Stop shall be in conformance with ASTM Alloy Classification for Semi-Red Brass. Valve shall be in compliance to the applicable sections of ASSE 1037, ANSI/ASME 112.18.6, and Military Specification V-29193.

Variations

☐ BG Bio-Gard™ Handle and Spray Arm
☐ YI Two Wall Bumpers (for open front seat without cover)

See Accessories Section of the Sloan catalog for details on these and other Flushometer variations.

UPC® Listed by I.A.P.M.D.

This space for Architect/Engineer approval

The information contained in this document is subject to change without notice.

SLOAN.

Made in the U.S.A.

SLOAN VALVE COMPANY • 10500 SEYMOUR AVE. • FRANKLIN PARK, IL 60131
PHONE: 1-800 982-5839 • FAX: 1-800 447-8329 • http://www.sloanvalve.com

© Copyright 1997 SLOAN VALVE COMPANY Printed in U.S.A.

Z5730

Siphon Jet Urinal

TAG UR-1

Z5730 Series

Z5730
- 1.0 gpf (gallons per flush)
- Vitreous china
- Siphon jet flushing action
- 3/4" top spud
- 2" I.P.S. outlet flange and rubber gasket with integral trap
- Shipping Weight: 34 lbs.

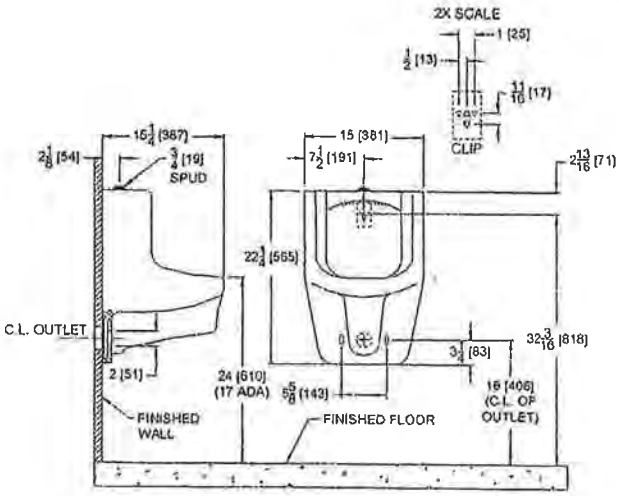

Engineering Specification:

☑ **Z5730 with Top Spud**
Vitreous china, wall hung siphon jet urinal with 3/4" top spud and wall hangers.

These dimensions and specifications are subject to change without notice.

Fixture dimensions meet ANSI/ASME standard A112.19.2M and CAN/CSA B45 requirements.

Meets the American Disabilities Guidelines and ANSI A117.1 requirements when urinal is installed 432mm (17") from finished floor.

This space is for Architectural/engineering Approval

See Zurn One Systems for suggested packages.

Zurn Plumbing Products Group Commercial Brass and Fixtures Operation
2640 South Work Street · Falconer, NY 14733 · Phone: 716-665-1132 · Fax: 716-665-1135 · www.zurn.com

ZURN®

AquaVantage®AV Model

TAG UR-1

Exposed Z6003AV Model

For 3/4" Urinals

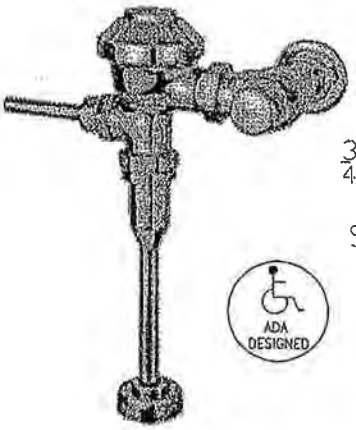

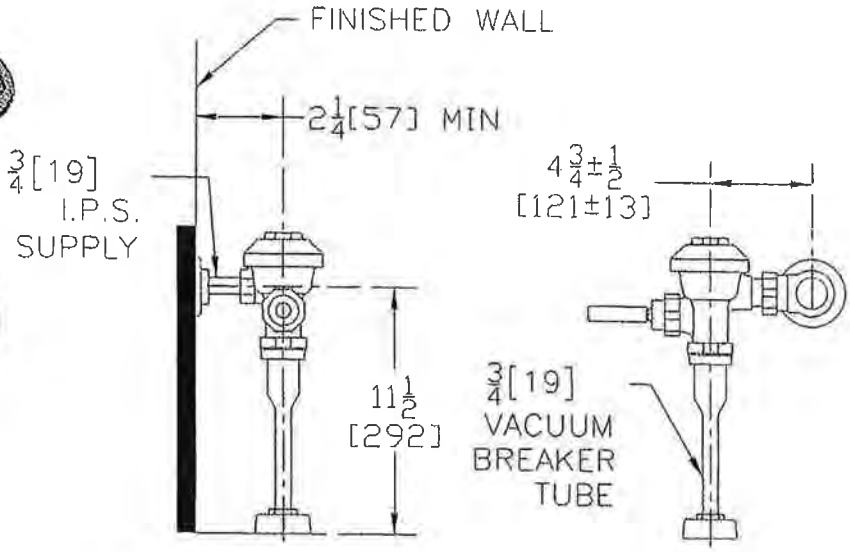

Flow Options

☐	-EWS	0.5 Gallons Per Flush
☑	-WS1	1.0 Gal. Low Consumption
☐	**Standard Flush**	1.5 Gallons Per Flush

Suffix Options (Check/Specify Appropriate Options)

____	-BG	BioCare Handle
____	-H	Handle on Front of Flush Valve
____	-L	1" [25] Metal Push Button
____	-L3	3" [76] Metal Push Button
____	-YJ	Split Ring Pipe Support
____	-YK	Solid Ring Pipe Support
____		Other

ENGINEERING SPECIFICATION: ZURN Z6003AV AquaVantage® 'AV' Exposed Urinal Flush Valve- Exposed, quiet diaphragm-type, chrome plated flushometer valve with a polished exterior. Complete with Zurn's AquaVantage® TPE, chloramine resistant, dual seal diaphragm with a clog resistant, triple filtered by-pass. The valve is ADA compliant with a non-hold open and no leak handle feature, high back pressure vacuum breaker, one piece hex coupling nut, adjustable tailpiece, spud coupling and flange for top spud connection. Control stop has internal siphon-guard protection, vandal resistant stop cap, sweat solder kit, and a cast wall flange with set screw. Internal seals are made of chloramine resistant materials.

This space is for Architectural/engineering Approval

ZURN INDUSTRIES, INC. ♦ COMMERCIAL BRASS OPERATION ♦ 5900 ELWIN BUCHANAN DRIVE ♦ SANFORD NC 27330
Phone: 1-800-997-3876 ♦ Fax: 919-775-3541 ♦ World Wide Web: www.zurn.com
In Canada: ZURN INDUSTRIES LIMITED ♦ 3544 Nashua Drive ♦ Mississauga, Ontario L4V1L2 ♦ Phone: 905-405-8272 Fax: 905-405-1292

AquaVantage® is a registered trademark of Zurn Industries, Inc.

Rev. E
Dwg. No. 65353
Date: 4/28/03
Product No. Z6003AV

GIF Project M&V Plan and Report: The Oregon Clinic

July 30, 2009

REVISED FINAL

Prepared by:

The Cadmus Group, Inc.
720 SW Washington Street
Suite 400
Portland, OR 97205
(503) 228.2992

With Team Members:

Allen Lee
Aquila Velonis
The Cadmus Group

with

Marc Leisenring
Geosyntec

Prepared for:

Portland Office of
Sustainable Development

Table of Contents

Executive Summary iii

1. Project Description 1
- General Project Characteristics 1
- Proposed Green Features 2
- M&V Scope and Schedule 3

2. Verified Green Features 5

3. Energy M&V 7

4. Water M&V 9
- Project and Counterfactual Characteristics 9
- Analysis Methodology 9
- Inputs and Analyses 9

5. Stormwater M&V 15
- Introduction and Purpose 15
- Stormwater Features and M&V Components 15
- Portland Area Rainfall Characteristics 16
- Site Inspection and Stormwater System Photos 16
- Rainwater Harvesting System Assessment 19
- Estimated Reduction in Average Annual Runoff 21
- Water Quality Modeling of Parking Lot Runoff 21
- Summary of Stormwater System Maintenance Costs 22
- Conclusions 23
- References 24

6. Construction and Demolition Waste 25

Appendix A: Stormwater Modeling 27
- Modeling Introduction 27
- Cistern Modeling 27
- Water Quality Modeling Approach 32

Executive Summary

The Oregon Clinic (TOC) is a four-story medical office building being built as part of the Gateway Transit Center Redevelopment project, a multi-phase, multi-use redevelopment of the approximately 5-acre park-and-ride lot adjacent to the Gateway Transit Center. The redevelopment of the site will require a partnership of private and public partners, most prominently Tri-Met and the Portland Development Commission. In the first phase, three floors of the 108,000 sq. ft. medical office building were planned for completion. This phase was submitted for consideration in the Office of Sustainable Development's (OSD) Green Investment Fund (GIF) program and was completed in November 2006.

This monitoring and verification report (M&V) focuses on municipal water and rainwater capture and use. Quantec and Geosyntec performed the M&V.

TOC was committed to integrating sustainable development into the design of the project. A goal of LEED™ Silver certification was established and early energy modeling indicated the building would achieve more than 30% energy savings. Commissioning was intended to ensure performance met projections. Other proposed green features included:

- aggressive waste management targets
- use of low-VOC and recycled-content materials and finishes
- transit-oriented attributes and a green housekeeping program

A rainwater recovery/harvesting system was integrated into the project along with water-efficient fixtures. The rainwater system was designed to serve 100% of irrigation needs, provide 62% of water required for sewage conveyance, and reduce the overall water needs for the building and its site by 44%. The rainwater system collects runoff from the rooftop and carries it through a filtration system and into a 20,000 gallon underground cistern. From the cistern, pumps are used to reroute the water to be used for irrigation and toilet flushing.

Table 1 provides the checklist used for the site inspection and summarizes our findings.

The first step in our M&V analysis was to determine the effect of the green features on water usage. Though most of the fixtures just met current standards, the lavatories were rated to use only 20% of the baseline amount. These fixtures were predicted to reduce their potable water usage 68% and total water use 23%. Use of captured rainwater was expected to significantly reduce the use of city water for fixtures that could use non-potable water.

The building facility manager provided metered water consumption data to compare with the estimated data. The metered data included non-potable water consumed by flushing fixtures (both rainwater and city water) and potable water used in sinks, showers, and other end-uses.

Table 1 Checklist for Site Visit

GIF Measure	Installed?	Comments
Rainwater harvesting for greywater reuse	Yes	
Stormwater off roof routed through filters to collection cistern	Yes	
Pumps to re-route the water to be used for irrigation and toilet flushing	Yes	
Infiltration of stormwater on site in the landscaped areas	Yes	
Stormwater falling on ground impervious surfaces is filtered and collected into two, permeable detention pipes	Yes	StormFilter® system was installed but permeable detention pipes were not. Given site runoff volume reduction, this is not considered to be an issue. Also, there was no initial provision for maintenance of this system and regular maintenance is required for proper functioning.
Low - flow fixtures (toilets)	Yes	1.0 g/flush Zurn urinal, 1.6 g/flush Zurn toilet. These just meet code.
Low - flow fixtures (showerheads)	Yes	2.5 g/flush. These just meet code.
Low - flow fixtures (aerators)	Yes	0.5 gal/m Zurn. These exceed the code water efficiency requirements.
Other Green Building Improvements	-	-
Low VOC and allergen-free materials/finishes used throughout interior	Yes	Documentation provided on several materials; also FSC certified wood products used
Waste managements targets	Yes	75% diversion; claimed for LEED
Recycled-content materials	Yes	10% post consumer content; claimed for LEED
Metering/Measurements	-	-
Annual municipal water use v. counterfactual	-	Will estimate
Cistern/harvested rainwater used for domestic and irrigation.	-	Will obtain measurements
Cost/frequency of stormwater treatment component replacement	-	Will document
Rainfall, runoff, runoff reduction, water quality	-	Will estimate
Quantec: OSD GIF Verification	-	Submitted 3/27/2007
Other: LEED TM (Silver rating)	-	In progress as of 3/27/2007

Using the metered data for the first 17 months of occupancy, we were able to compare predicted consumption and savings to the observed values. The estimated and metered water usage data are shown in Figure 1. The chart displays some significant differences between the pre-construction estimates and the metered data.

The use of non-potable water was considerably less than the prediction. Flushing fixtures used just over half the amount originally estimated, or 485,000 gal/year. Though the rainwater captured was only about half the original estimate, it was sufficient to provide 50% of the non-potable water used.

Figure 1. Comparison of Estimated and Metered Water Usages

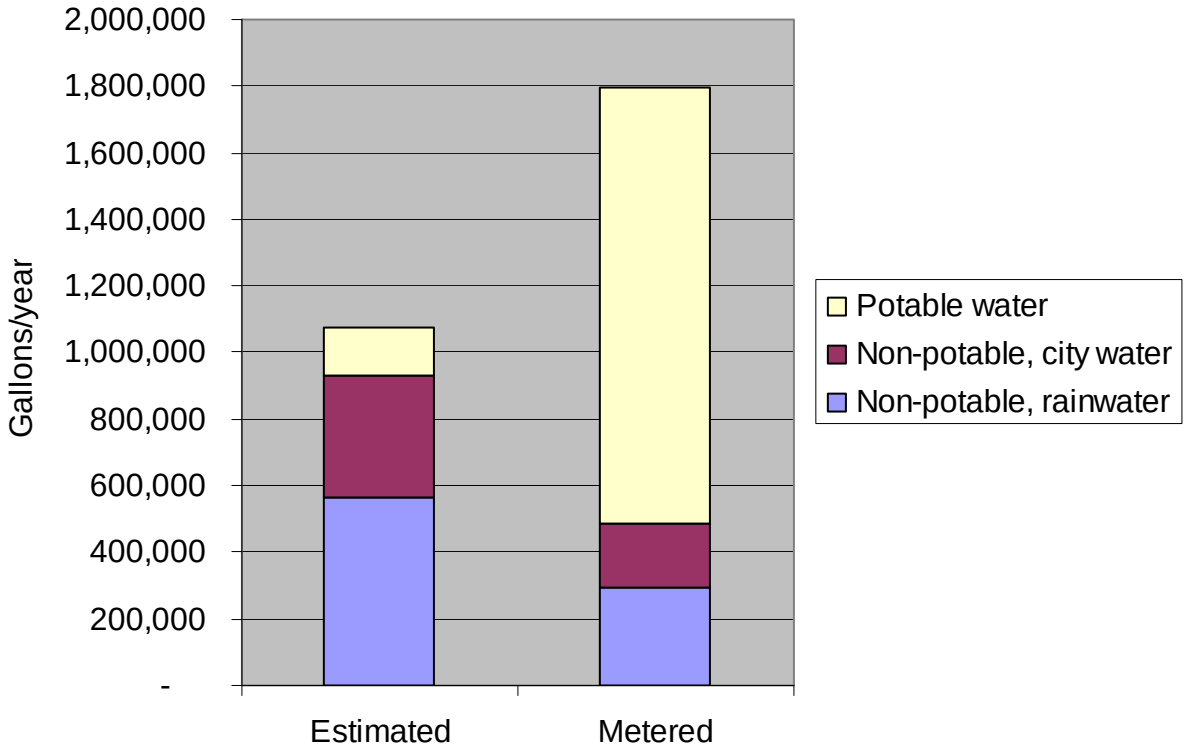

The biggest discrepancy between the predicted and actual water use was the amount of potable water consumed—nearly nine times the estimated amount of potable water was actually used. We discussed these results with the facility manager and he noted that the building used medical equipment, as well as the conventional flush and flow fixtures. The savings estimates (for the LEED™ submission) included only the conventional flush and flow fixtures. The manager estimated that one type of medical equipment used about 780,000 gal/year and there was additional equipment that also used considerable quantities of water. It is likely that these two types of equipment accounted for the observed difference. However, correspondence with the manager in the summer of 2009 indicates that a new type of medical equipment is now being used that uses much less water. The manager estimates that approximately 40% less potable city water is being used as compared to the original assessment.

The second major component of our M&V efforts was an assessment of 1) the rain harvesting system with a 20,000-gallon underground fiberglass tank collecting rainwater from the 33,000 square foot; 2) rainwater reclamation system with a 5 micron bag filter and UV filter to treat water stored in the underground tank; and 3) a 48" Storm Manhole with three perlite StormFilter® cartridges treating runoff from the parking lot. Specific M&V tasks included assessing rainwater harvesting system performance, stormwater runoff, water quality improvement for parking lot runoff, and cost and frequency of stormwater component replacement and other maintenance.

Figure 2 shows cumulative non-potable water usage since the building was occupied. The figure shows that harvested water has supplied more non-potable water than the municipal system since early 2007. Considering the improvements made to the system in 2007, continued efforts by the building manager to optimize the system, and current performance, it is expected that the system will meet or exceed the goal of 62% of the water needed for sewage conveyance.

Figure 2. Non-Potable Water Usage (updated July 2009)

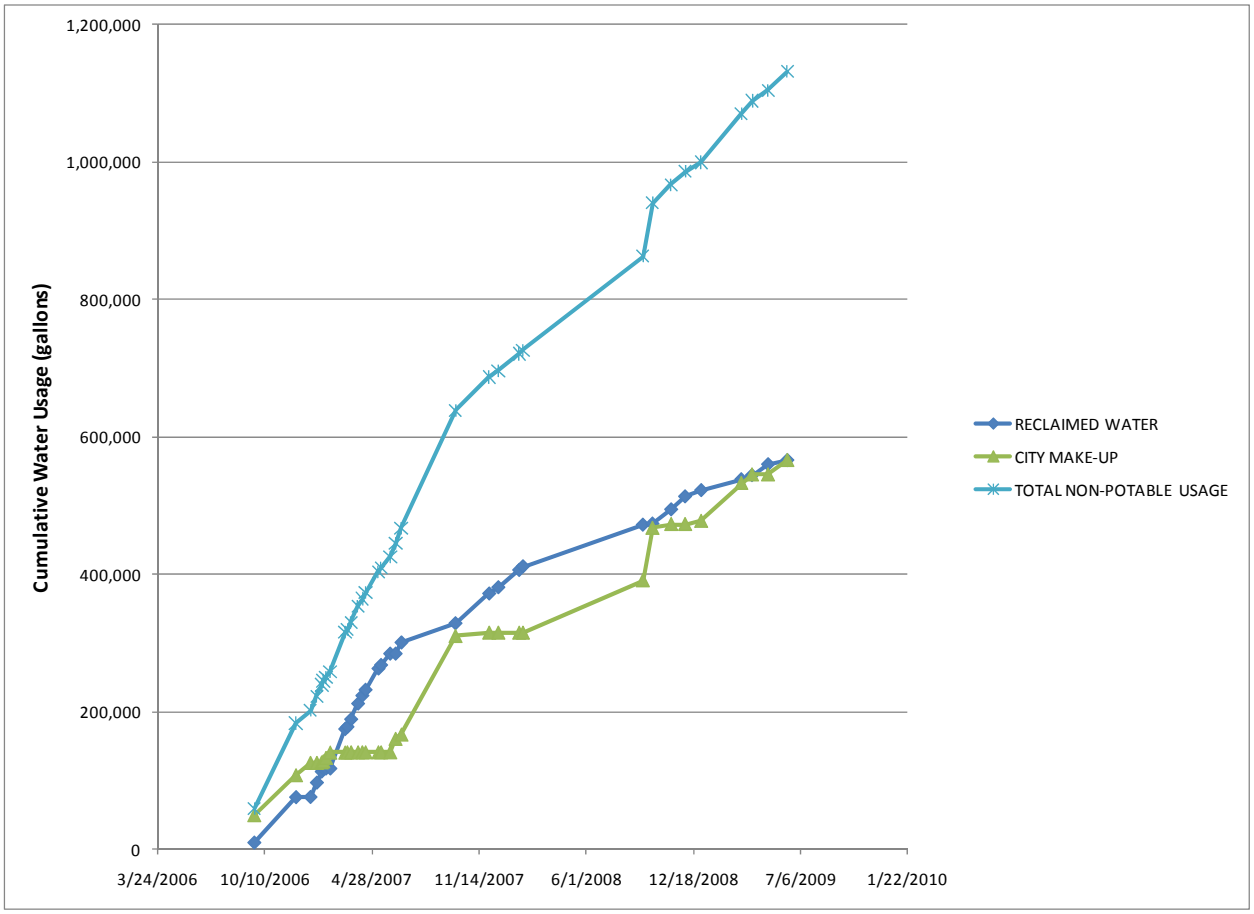

While one of the goals of this project was to meet 100% of the irrigation water needs with reclaimed water, toilet demands tend to dominate so there is not much stored water remaining to use for irrigation. Nonetheless, the system does capture and use a significant volume of rain (30% to 45%) that falls on the roof and treats nearly all rain that falls on TOC's portion of the parking lot.

The parking lot StormFilter® manhole appears to provide a high level of treatment of total suspended solids and a moderate level of treatment for total phosphorus and total copper. In addition, due to the near complete capture and use of rainwater on the rooftop, total runoff volume and pollutants are much less than if conventional drainage practices were employed. For example the stormwater system at the site is estimated to reduce the total annual runoff volume by nearly 30,000 cubic feet, or approximately a 23% reduction from the average annual runoff volume that would occur without the rainwater harvesting system.

Based on for the system, average annual maintenance cost for stormwater management is approximately $1,740. This estimate does not include the cost of collection, management, or analysis of water use data or unanticipated component maintenance or replacement costs. Given current City of Portland water rates, the system is estimated to save approximately $795 per year on water bills.

1. Project Description

General Project Characteristics

The Oregon Clinic (TOC) is a four-story medical office building being built as part of the Gateway Transit Center Redevelopment project, a multi-phase, multi-use redevelopment of the approximately 5-acre park-and-ride lot adjacent to the Gateway Transit Center. Complete build-out of the site is expected to take between 10 and 20 years to complete, depending on market conditions. The redevelopment of the site will require a partnership of private and public partners, most prominently Tri-Met and the Portland Development Commission.

In the first phase—TOC construction (see Figure 3)—of this multi-phase project, three floors of the 108,000 sq. ft. medical office building, including approximately 1,000 sq. ft. of ground floor retail, were planned for completion. This phase of the project was submitted for consideration in the Office of Sustainable Development's (OSD) Green Investment Fund (GIF) program. The second phase will add one or two floors to the building and subsequent phases will increase the height to either 8 or 10 floors.

Figure 3. The Oregon Clinic

The following firms and team members were involved in this project:

- Owner: The Oregon Clinic, LLC
- Developer: Gerding/Edlen Development Company, LLC
- Architect: GBD Architects Incorporated
- Planning Consultant: Giffin Bolte Jurgens
- Contractor: Hoffman Construction Company
- MEP Designer: Mazzetti & Associates, CBG Consulting Engineers
- Structural Engineer: kpff Consulting Engineers
- Landscape Architect: Langlo Hansen
- Civil Engineer: Harper Houf Peterson Righellis Inc.

This project was originally proposed to be completed in August 2006. It was actually completed in November 2006.

Proposed Green Features

In their GIF application, the developers indicated that TOC was committed to integrating sustainable development into the design of the medical office building. A goal of LEED™ Silver certification was established for the project. Energy modeling conducted at 100% design development indicated the building would achieve more than 30% savings ov

er the ASHRAE standard using the LEED™ energy modeling protocol. Additional commissioning, as well as the required fundamental commissioning, was intended to ensure that system performance met projections. Aggressive waste management targets, the use of low-VOC and recycled-content materials and finishes for resource conservation, improved indoor air quality, and transit-oriented attributes were all emphasized in the project. A green housekeeping program was also proposed for this project.

In addition to these features, a rainwater recovery/harvesting system was integrated into the project along with water-efficient fixtures. These features were the focus of our monitoring and verification (M&V) activities conducted for TOC. The rainwater system was designed to serve 100% of irrigation needs, provide 62% of water required for sewage conveyance, and reduce the overall water needs for the building and its one-acre site by 44%. The rainwater system collects runoff from the entire building rooftop through a network of roof drains and internal downspouts through a filtration system and into a 20,000 gallon underground cistern (includes 5,000 gallons of dead storage). From the cistern, pumps are used to reroute the water to be used for irrigation and toilet flushing.

The green features and practices that were originally proposed for the units in this project under the GIF program award are listed in Table 2. Major green features originally proposed included the stormwater collection and filtration system. Deviations from these proposed features are described in the next section.

Table 2. Green Features and Practices Initially Proposed for GIF Funding

Proposed Measures
Rainwater harvesting for greywater reuse
Stormwater off roof is routed through filters to a collection cistern holding up to 15,000 gallons of water
Pumps are used to reroute the water to be used for irrigation and toilet flushing
Infiltration of stormwater onsite in the landscaped areas
Stormwater falling on ground impervious surfaces is filtered and collected into two, permeable detention pipes
Low - flow fixtures (toilets)
Low - flow fixtures (showerheads)
Low - flow fixtures (lavatory aerators)

M&V Scope and Schedule

In accordance with the priorities identified by the OSD, the M&V focus was on municipal and rainwater capture and use. Quantec and Geosyntec performed the M&V for this project. Quantec focused on the review of the green features installed and had the lead for analysis of municipal water use. Geosyntec had the lead for the analysis of the rainfall, runoff reduction, water quality, and harvested rainwater use. Geosyntec also supported the analysis of the municipal water usage.

Our schedule for M&V activities is shown in Figure 4.

Figure 4. M&V Schedule

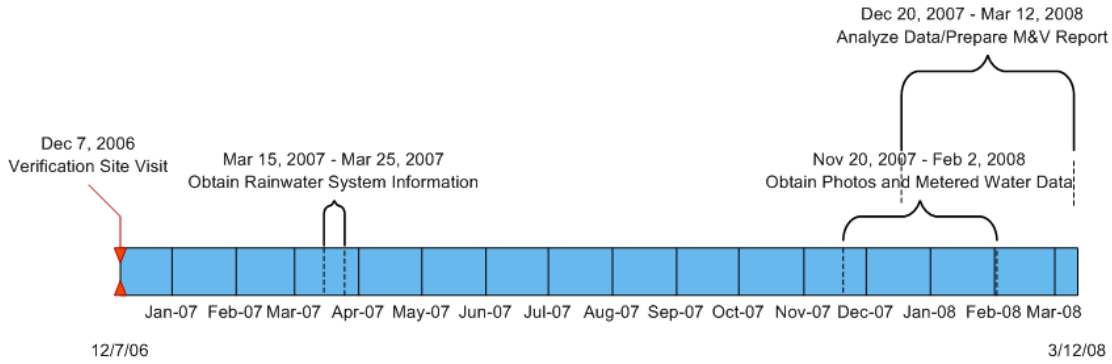

The remainder of this report follows the standard format developed for GIF M&V reports. Only those chapters that are relevant to the M&V requirements of this project contain detailed information.

2. Verified Green Features

Quantec and Geosyntec scheduled and performed a detailed site visit to verify that the green measures were incorporated into the facility. As shown in the checklist in Table 3, we reviewed the measures listed in Table 2 to verify that they were present and properly installed. We also noted additional measures where other green or energy-efficient features were installed, but not included as part of the GIF. The GIF measures are shown in the first section of the table.

For measures that involved the use of recycled material or environmentally-friendly products (e.g., low VOC paint), the measures were visually verified when possible. In other cases, either John Duncan of GBD Architects, John Duffy of Mazzetti & Associates, or Renee Worme or Kellee Jackson of Gerding/Edlen Development, LLC provided documentation or confirmed the use of the material or product. Tim Harman with TOC was very helpful in providing information on the rainwater/stormwater system.

It is important to note that the information presented in Table 3 reflects conditions at the time of our verification site visit. One important note on the project is that it received LEED Gold certification, which was above the Silver level originally planned. Subsequent sections of this report present conditions and our findings one-year after the initial site visit.

Table 3: Checklist for March 27, 2007 Site Visit

GIF Measure	Installed?	Comments
Rainwater harvesting for greywater reuse	Yes	
Stormwater off roof is routed through filters to a collection cistern holding up to 15,000 gallons of water	Yes	
Pumps are used to re-route the water to be used for irrigation and toilet flushing	Yes	
Infiltration of stormwater on site in the landscaped areas	Yes	
Stormwater falling on ground impervious surfaces is filtered and collected into two, permeable detention pipes	Yes	Based on discussions with several people involved in the project, we determined that a StormFilter® system was installed but permeable detention pipes were not. Given site runoff volume reduction, this is not considered to be an issue. Also, there was no initial provision for maintenance of this system and regular maintenance is required for proper functioning.
Low - flow fixtures (toilets)	Yes	1.0 g/flush Zurn urinal, 1.6 g/flush Zurn toilet. These just meet code.
Low - flow fixtures (showerheads)	Yes	2.5 g/flush. These just meet code.
Low - flow fixtures (aerators)	Yes	0.5 gal/m Zurn. These exceed the code water efficiency requirements.
Other Green Building Improvements	-	-
Low VOC and allergen-free materials and finishes used throughout interior	Yes	Documentation provided on several materials; also FSC certified wood products used
Waste managements targets	Yes	75% diversion; claimed for LEED
Recycled-content materials	Yes	10% post consumer content; claimed for LEED
Metering/Measurements	-	-
Annual municipal water use v. counterfactual	-	Will estimate
Cistern/harvested rainwater used for domestic and irrigation.	-	Will obtain measurements
Cost/frequency of stormwater treatment component replacement	-	Will document
Rainfall, runoff, runoff reduction, water quality	-	Will estimate
Quantec: OSD GIF Verification	-	Submitted 3/27/2007
Other: LEED TM (Silver rating)	-	In progress as of 3/27/2007

3. Energy M&V

Energy analysis was not a component of the M&V conducted for this project so no energy analyses or results are presented in the report. As noted before, the project was designed to reduce energy use 30% below the ASHRAE standard level.

4. Water M&V

Project and Counterfactual Characteristics

Most of the fixtures in the building just met the flow rate requirements of current standards. As shown in Table 4, the lavatories were more water efficient than required by the standards (counterfactual case).

Table 4. Water Using Equipment

	Counterfactual	Project
Flush Fixtures	Gal/flush	Gal/flush
Water closet	1.6	1.6
Urinal	1.0	1.0
Flow Fixtures	Gal/minute	Gal/minute
Lavatory 1	2.5	0.5
Lavatory 2	2.5	0.5
Lavatory 3 with sensor	2.5	0.5
Hand wash fountain	0.5	0.5
Shower, men	2.5	2.5
Shower, women	2.5	2.5

The other factor that affected the water savings of the project was the use of captured rainwater. Use of rainwater offset the consumption of municipal water.

Analysis Methodology

Water savings are estimated by starting with assumptions about fixture usage and then comparing the water consumption based on fixtures that just meet current standards (counterfactual case) with fixtures actually installed in the project. The developer provided the calculations sheets used in the LEED™ application to demonstrate water savings and we used these as the starting point for our analysis.

The calculations also included estimates of the amount of captured rainwater that would be used. We took this into account in our initial analysis and then modified it as needed based on metered data.

Inputs and Analyses

Input Data

The data shown in Table 4 were used to derive the counterfactual and installed fixture flows. During our M&V verification site visit, we confirmed that the installed fixture flow rates were as shown in the table.

The information provided by the developer also included the estimated number of persons using fixtures and usages per person. Based on the building owner's estimates, 34 males and 123 females worked in the facility. Employees were assumed to use toilets three times per day. Approximately half (75) were estimated to work directly with patients and use one of the hand wash sinks 8 times per day. A total of 1,942 visitors, split evenly between males and females, were assumed to visit the building each day. Each visitor was assumed to use the restroom once during their visit, with females using the toilet and half the males using the toilet and half using the urinal. The restrooms are split evenly between individual and public rooms; the individual rooms have manually operated faucets and the public ones have sensor-operated faucets.

Based on a review of other references, the values shown in Table 5 appeared to be reasonable. One source used the same durations for flow fixtures and slightly more flushes per fixture.[1] Another provided default assumptions that were similar; estimated average toilet uses were slightly fewer (2.6/day) and shower durations were slightly longer (492 sec.).[2] Consequently, we determined that the assumptions were reasonable and used them in our analysis.

Table 5. Estimated Fixture Usage Inputs

Flush Fixtures	Daily Uses/Person	No. of Flushes	Users
Toilet			
Males	3	1	34
Females	3	1	123
Toilet			
Males	0.5	1	971
Females	1	1	971
Urinal	0.5	1	971
Flow Fixtures	**Daily Uses/Person**	**Duration (sec.)**	**Users**
Lavatory faucet	3	15	157
Hand wash fountain	8	15	75
Lavatory faucet	1	15 (12 with sensor)	971
Shower	0.1	300	157
Shower	1	300	2

The building facility manager provided metered water consumption data to compare with the estimated data. The metered data included non-potable water consumed by flushing fixtures (both rainwater and city water) and potable water used in sinks, showers, and other end-uses.

[1] University of Minnesota. 2004. *The State of Minnesota Sustainable Building Guidelines-Summary Version 1.1Section 3*, Twin Cities Campus, Minnesota.

[2] Groves, D., J. Fischbach, and S. Hickey. 2007. *Evaluating the Benefits and Costs of Increased Water-Use Efficiency in Commercial Buildings,* RAND Corporation, Santa Monica, California.

Analysis

Given that we confirmed the flow ratings of the installed fixtures and the reasonableness of the usage assumptions, these were used in our estimate of the baseline water usage and the estimate of consumption with the efficient fixtures installed. The estimates are shown in Table 6.

Table 6. Estimated Water Usage

Flush Fixtures	Daily Uses/Person	No. of Flushes	No. of Users	Baseline Flow, gal./flush	Efficient Flow, gal./flush
Toilet					
Males	3	1	34	1.6	1.6
Females	3	1	123	1.6	1.6
Toilet					
Males	0.5	1	971	1.6	1.6
Females	1	1	971	1.6	1.6
Urinal	0.5	1	971	1	1
Annual flush fixture flow, gal.				928,070	928,070
Flow Fixtures	Daily Uses/Person	Duration (sec.)	No. of Users	Baseline Flow, gal./min.	Efficient Flow, gal./min.
Lavatory Faucet	3	15	157	2.5	0.5
Hand Wash Fountain	8	15	75	0.5	0.5
Lavatory Faucet	1	15	971	2.5	0.5
Lavatory Faucet	1	15	971	2.5	0.5
Lavatory Faucet	1	12	971	2.5	0.5
Shower	0.1	300	157	2.5	2.5
Shower	1	300	2	2.5	2.5
Annual flow fixture flow, gal.				469,138	149,136
Total annual flow, gal.				1,397,208	1,077,206

Results

Figure 5 shows the estimated annual consumption of potable and non-potable water with the standard baseline fixtures and with the efficient fixtures that were installed. This figure illustrates that all the efficiency savings shown in Table 6 would occur with the potable water fixtures, reducing annual consumption by a little over 320,000 gallons, or 23%.

Figure 5. Comparison of Estimated Fixture Water Consumptions

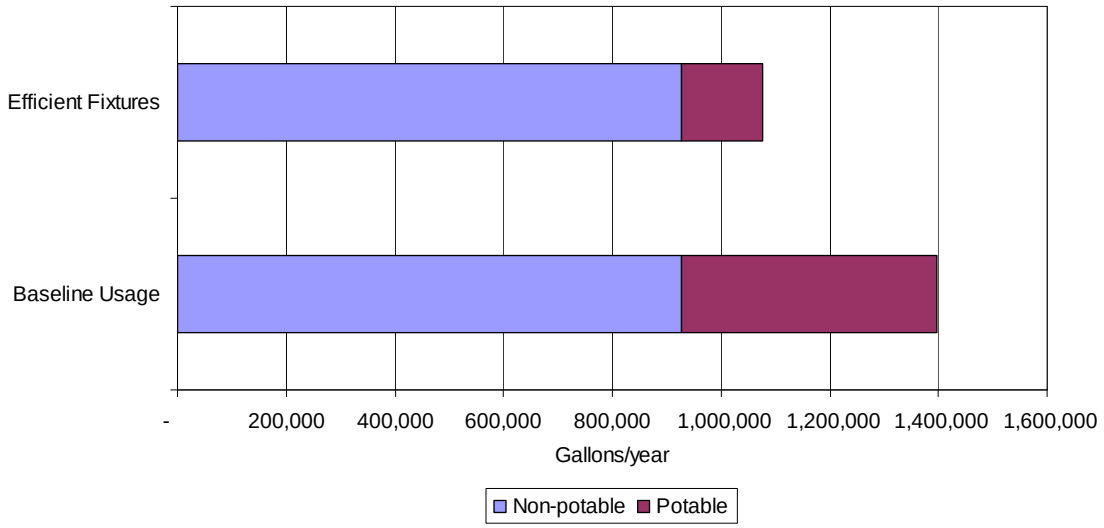

Using the metered data for the first 17 months of occupancy, we were able to compare predicted consumption and savings to the observed values. To derive typical annual values, we used the data for different periods covering one year and averaged them. The estimated and metered water usage data are shown in Figure 6. The chart displays some significant differences between the pre-construction estimates and the metered data.

Figure 6. Comparison of Estimated and Metered Water Usages

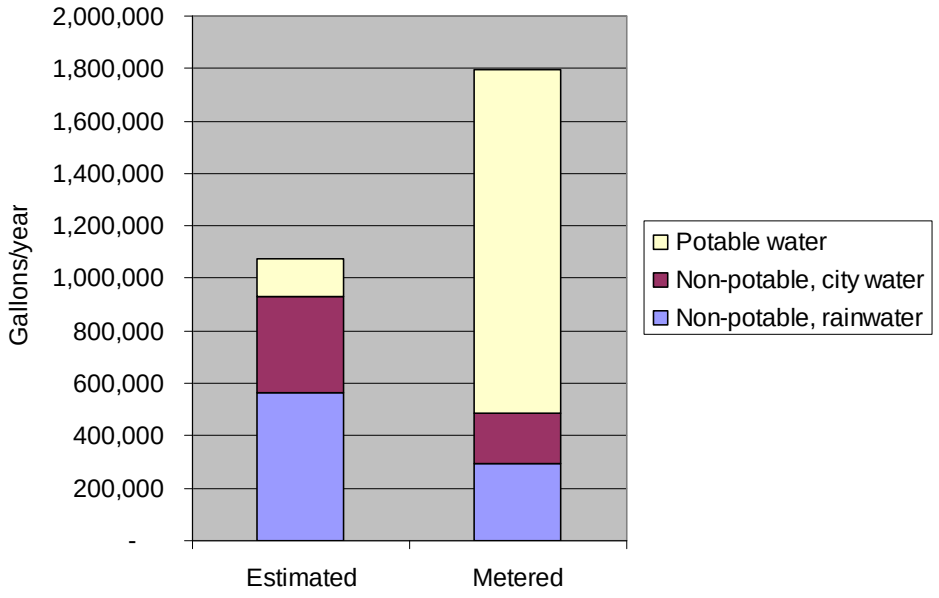

The most outstanding difference is in the total consumption of potable water, which was metered as more than 1.1 million gallons greater than, or nearly nine times, the original estimate. We discussed these results with the facility manager and he noted that the building used medical equipment, as well as the conventional flush and flow fixtures. The savings estimates (for the LEED™ submission) included only the conventional flush and flow fixtures. He estimated that one type of medical equipment used about 780,000 gal/year and there was additional equipment that also used considerable quantities of water. He did not estimate the water usage for this equipment, but it is likely that these two types of equipment accounted for the observed difference. However, correspondence with the manager in the summer of 2009 indicates that a new type of medical equipment is now being used that uses much less water. The manager estimates that approximately 40% less potable city water is now being used as compared to the original assessment in 2008.

The use of non-potable water, on the other hand, was considerably less than the original estimate. Flushing fixtures used just over half the amount originally estimated, or 485,000 gal/year. The amount of rainwater captured was also considerably less than the original estimate; captured rainwater was 52% of the original estimate. The net effect was that captured rainwater provided the predicted 60% of the non-potable water used, even though the amount captured was considerably less than predicted. The capture efficiency of the rainwater harvesting system is discussed in detail in the next section.

5. Stormwater M&V

Introduction and Purpose

As noted earlier, TOC includes several stormwater treatment and control features intended to reduce, reuse, and treat stormwater runoff from the facility. This chapter summarizes those stormwater features, provides an evaluation of their effectiveness, and summarizes their capital and operations costs. The stormwater features and M&V components included in the project are described in the next section, followed by a brief description of Portland area rainfall. The remaining sections describe the site visit, analysis of the stormwater reuse and treatment, summarization of costs, and conclusions regarding the stormwater system performance.

Stormwater Features and M&V Components

The Oregon Clinic includes the following stormwater features:

- A rain harvesting system consisting of a 20,000-gallon underground fiberglass tank collecting rainwater from approximately 33,000 square feet of roof area
- A rainwater reclamation system consisting of a 5 micron bag filter and a UV filter that treats the water stored in the underground tank prior to use
- A 48” Storm Manhole with three perlite StormFilter® cartridges treating runoff from approximately 0.42 acres of parking lot

TOC has a dual water supply system consisting of non-potable water for toilets and irrigation and potable water for all other uses. The non-potable water supply consists of the reclaimed rainwater as well as supplemental City water to meet unmet demands. A variance to the City of Portland plumbing code was obtained to permit the reclamation system.

Stormwater monitoring and verification components for this project include the following:

- Site inspection
- Rainwater harvesting system assessment
- Reduction in stormwater runoff from the project site
- Water quality improvement estimates for the parking lot runoff
- Cost and frequency of stormwater component replacement and other maintenance

Portland Area Rainfall Characteristics

The selection and design of stormwater features is based in large part upon the precipitation characteristics of the location where they will be used. The analysis of the stormwater system components in the following sections is based upon local rainfall data collected at the Portland International Airport (PDX) from January 1949 through December 2005.

Portland area rainfall is generally of low intensity, but makes up for this with its frequency. Portland averages around 155 days of rain annually with the majority (~75%) of rainfall occurring during the fall and winter months from October through March. Nearly 55,000 hours of hourly rainfall data (measurements > zero) collected at PDX were analyzed to investigate rainfall intensities and the temporal distribution. Ninety percent of area rainfall is less than 0.08 inches per hour and over 99 percent of the analyzed rainfall data are less than 0.20 inches per hour. Average annual rainfall at PDX for the 56 years of data analyzed was 36.6 inches with a standard deviation of 7.3 inches. Figure 7 displays the annual rainfall totals and Figure 8 shows the average monthly Portland rainfall.

Site Inspection and Stormwater System Photos

A site inspection of the project was conducted on the morning of December 7, 2006, to review and collect information on the M&V features at TOC. As mentioned above, the stormwater system consists of rainwater harvesting, storage, and reuse of roof runoff, as well as treatment of parking lot runoff. During the site visit, information was collected on the roof drainage area, operation and maintenance requirements, water use, and overall mechanics of the system.

The rainfall harvesting and reclamation system operates as follows:

1. Rainfall is collected from the roof area and conveyed to a 20,000 gallon storage tank beneath the parking lot. If the roof drains are clogged such that the water on the roof exceeds 4-inches of depth or if the tank is full, then the runoff bypasses the storage tank and is discharged directly to the storm drain system. Four to five thousand gallons of water is maintained in the underground storage tank at all times to ensure the pumps do not operate dry (thus usable capacity is about 15,000 gallons).

2. Stored rainfall is pumped from the tank through a 5 micron bag filter, through a cartridge filter and UV light for disinfection, and into a non-pressurized 400 gallon Nalgene tank where supplemental, non-potable City water is added when needed.

3. From the 400 gallon tank, the water passes through a booster pump and into an expansion tank. This pressurizes the distribution system that supplies water to the building's toilets and outdoor spigots for irrigation.

After the site visit, the building engineer, Tim Harman, provided additional photographs of the rainwater harvesting and reclamation system components (Figure 9). Photo 1 shows the rooftop area and two of the roof drains. One of these drains to the underground storage tank while the other is an emergency overflow designed to discharge directly to the storm drain if rainwater

Figure 7. Portland Yearly Rainfall Totals (PDX Rain Gage)

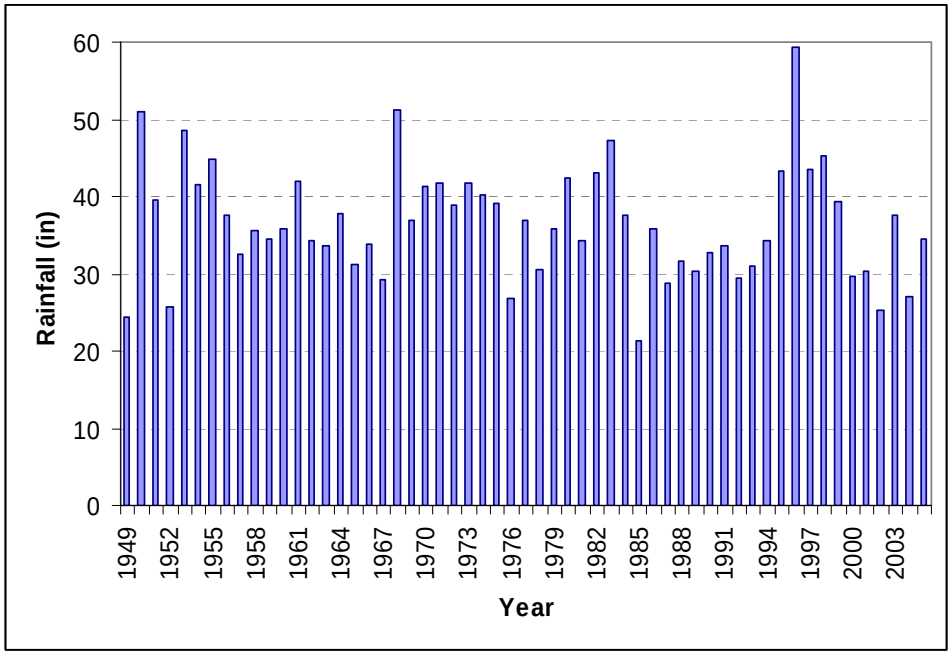

Figure 8. Portland Average Monthly Rainfall

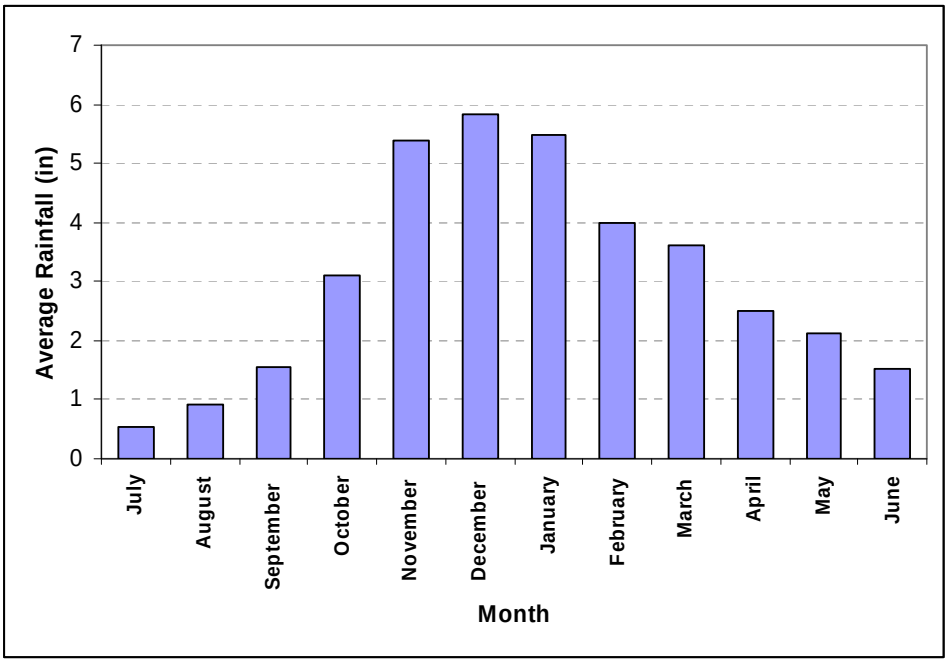

Figure 9. Stormwater M&V Photos

Photo 1: Building Rooftop and Drains

Photo 2: Bag Filter Housing

Photo 3: Filter Cartridge and UV Light

Photo 4: Non-Potable Water Mixing Tank

Photo 5: Booster Pump and Expansion Tank

ponds above the 4-inch lip. Note that the original overflow drain had a 1-inch lip that was retrofitted to a 4-inch lip in the summer of 2007. Photos 2 and 3 show the 5 micron bag filter housing and the UV filter skid, respectively. Photo 4 is the 400 gallon Nalgene tank and Photo 5 is the booster pump and pressurized expansion tank.

Rainwater Harvesting System Assessment

The rainwater harvesting system has been in operation since September 2006. Since that time the cumulative volumes of reclaimed water and supplemental non-potable City water have been recorded on a frequency of approximately 2-3 times per month. Figure 10 is a plot of the cumulative non-potable water usage for the entire period of operation (last updated July 2009). As shown in the figure, the total water use rate was relatively constant at approximately 1,200 gallons per day until October 2007, when the use rate dropped to approximately 650 gallons per day. For the 2008-2009 wet season, the use rate was approximately 550 gallons per day. The reason for this approximately 50% drop in rainwater use rate as compared to the initial rate is currently unknown. However, the building manager has noted problems with the float switches that control the operation of the main pump in the cistern. The clogging of filters may also be causing the system to switch over to the non-potable City water. The building manager believes that if the operation of the system is improved the use rate of harvested rainwater can be increased. Figure 10 clearly illustrates the periods where the reclaimed rainwater was more heavily used than the supplemental City water, and vice versa.

Figure 10. Non-Potable Water Usage (updated July 2009)

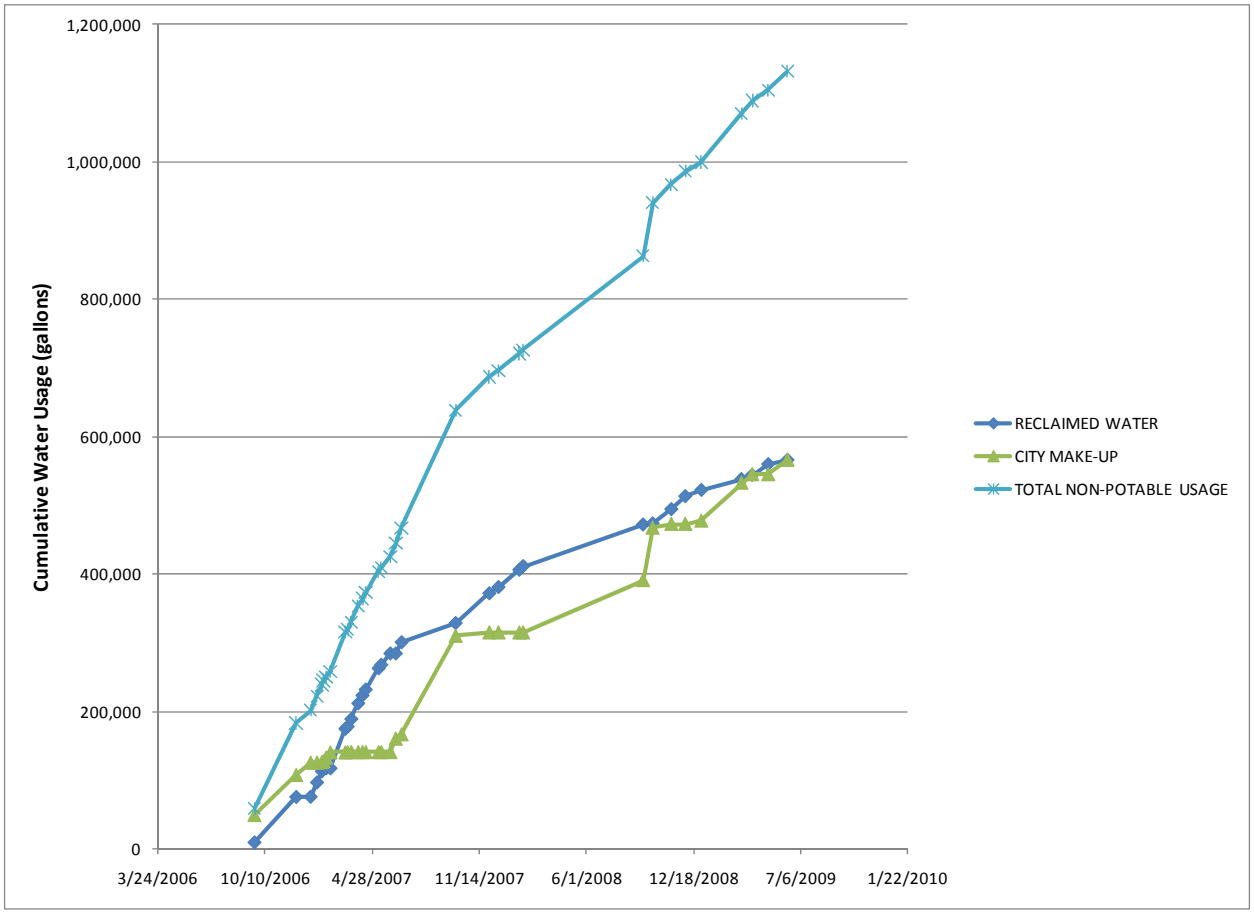

In addition to the plot, the following water use statistics have been noted:

- Total reclaimed water used from start-up (9/20/06 to6/12/09): 565,980 gallons
- Total supplemental City water used from start-up (9/20/06 to6/12/09): 565,700 gallons
- Reclaimed water used in 2006-2007 wet season (Sept. through June): 319,170 gallons
- Reclaimed water used in 2007-2008 wet season (Sept. through June): 144,920 gallons
- Longest consecutive days of continuous reclaimed water use: 123 days
- Daily average non-potable water use rate since system start-up: 1,100 gallons/day

During the 2006-2007 wet season the volume of rain that fell on the roof of the building was approximately 736,000 gallons, which should have been enough to supply 100% of water needed for sewage conveyance during wet periods. However, there were two system modifications that affected the overall capture efficiency during this time frame. From January 24, 2007, until February 9, 2007, the tank was full, but the float switches were not working properly due to a wiring problem that has been subsequently corrected. Therefore, no water was harvested during that time. In the summer of 2007, the 1-inch lips on all overflow drains on the roof were replaced by 4-inch lips. While bypasses at the roof were not likely, this modification should ensure bypasses at the roof would only occur if the primary drains became clogged.

Based on data collected in the 2007-2008 wet season, the system met nearly 95% of the sewage conveyance water demand from October 1, 2007 to February 4, 2008. During the 2008-2009 wet season, however, only about half of the non-potable water demand was met by the stormwater harvesting system. According to the building engineer, this was likely due to a combination of float switch operation difficulties and the timing and intensity of storm events as compared to the previous wet season. However, during the months of November 2008 and May 2009 nearly 100% of the demand was met by the harvesting system.

Estimated Reduction in Average Annual Runoff

The system performance was estimated based on a series of nomographs and data presented in Appendix A. To estimate the reduction in annual average runoff due to the rainwater harvesting system, the volume and emptying time of the underground tank must be accounted for in relation to long-term rainfall characteristics. As indicated above, the tank has a live storage volume of 15,000 gallons and the total non-potable water use rate ranges from 650 gallons per day (2007-2008 use estimates) to 1,200 gallons per day (2006-2007 use estimates). Therefore, the tank when full is emptied in 12.5 to 23.1 days, on average.

Using long-term rainfall-runoff simulation results and the storage-discharge characteristics of the rainwater harvesting system, the capture efficiency of the system was estimated. Before the nomographs can be used, however, the volume of the cistern must be normalized by the roof top drainage area. The 15,000 gallon storage divided by 32,935 square feet of roof drainage area results in an estimated normalized storage volume of 0.73 inches of rainfall. Comparing this normalized storage volume and the estimated drain times of 12.5 to 23.1 days (1.8 - 3.3 weeks) to the nomographs in Figure A-2 of Appendix A, the estimated average annual percent capture is about 30% to 45%. However, since the demand only occurs during working hours (8-6 PM, M-F), the daily average usage rate is greater than this during the week (toilet flushing and irrigation demand) and less than this on the weekend (only irrigation demand). Without data on the actual weekday and weekend daily use rates coupled with an analysis of storm event arrival times it is not possible to determine the overall effect that fluctuations in daily water demand have on average annual percent capture. Based on this assessment, it appears the rainfall harvesting system, on average, can capture from about one-third to almost one-half of the annual rain falling on the roof (~36.6 inches/year), during an average year, except for periods of low demand and high intensity storms. During weekends, the harvesting system may bypass more regularly.

Regarding irrigation needs, the system does not appear to be effective at reducing irrigation demand because when the tank is full irrigation is generally not needed and, by the time irrigation is needed, the water has been used in the building for flushing toilets. During spring and fall, there may be some occurrence of excess volume in the tank that can be used for irrigation, but these are thought to be rare.

Water Quality Modeling of Parking Lot Runoff

As mentioned above, approximately 0.42 acres of the parking lot is being treated by three perlite StormFilter® cartridges located in a manhole. StormFilter® is a proprietary, flow-through media filter that provides treatment of runoff by filtering and adsorbing pollutants. The water quality

design flow rate for these cartridges is 0.07 cfs (HHPR, 2005). The normalized water quality design flow rate per drainage area is approximately 0.165 in/hr. Comparing this to the BMP percent capture nomographs for flow-based BMPs in Appendix A (Figure A-4 and Figure A-), the estimated average annual volumetric percent capture is greater than 95%.

Using this percent capture and the modeling methodology described in Appendix A, annual average pollutant loads and concentrations from the parking lot before and after treatment were estimated (Table 7). The parking lot runoff concentrations were estimated to be equivalent to a commercial land use type and the StormFilter® device was assumed to perform similarly to media filters from the ASCE International BMP database (www.bmpdatabase.org). As shown in the table, the treatment of the parking lot is expected to significantly reduce the loads and concentrations of total suspended solids (TSS), total phosphorus (TP), and total copper (TCu). Nitrate, dissolved copper, and oil and grease are not expected to be significantly reduced by the media filter device, but the runoff concentrations are estimated to be low. The estimated reductions are comparable to the performance results supplied by the StormFilter® manufacturer (HHPR, 2005).

Table 7: Parking Lot Water Quality Modeling Results.

Loads (lbs/yr)	TSS	TP	NO3-N	DCu	TCu	O&G
Before Treatment	185.1	0.75	0.69	0.020	0.049	7.52
After Treatment	31.2	0.39	0.69	0.019	0.026	7.52
% Decrease	83%	47%	0%	7%	47%	0%
Concentrations (mg/L)	**TSS**	**TP**	**NO3-N**	**DCu**	**TCu**	**O&G**
Before Treatment	64.0	0.26	0.24	0.0070	0.0170	2.60
After Treatment	10.8	0.14	0.24	0.0065	0.0089	2.60
% Decrease	83%	47%	0%	7%	47%	0%

TSS = total suspended solids, TP = total phosphorus, NO3-N = nitrate as nitrogen, DCu = dissolved copper, TCu = total copper, O&G = oil and grease

Summary of Stormwater System Maintenance Costs

The rainwater harvesting system and the StormFilter® vault have several components that must be regularly maintained or replaced. Table 8 summarizes the frequency and costs associated with the operations and maintenance of these components.

Based on the maintenance cost estimates shown in Table 8, average annual maintenance cost for stormwater management at TOC is approximately $1,740. This cost estimate does not include the cost of collection, management, or analysis of water use data or unanticipated component maintenance or replacement costs.

The City of Portland 2008 water rates are $1.86 per hundred cubic feet and based on the 2006-2007 water use data, the annual reclaimed water use is approximately 42,700 cubic feet. Therefore, the system is estimated to save approximately $795 per year on water bills.

Table 8: Summary of Maintenance Costs and Frequency.

Component/Activity	Frequency	Unit Cost
Roof cleaning w/ pressure washer	Annual	$200*
Storage tank cleaning w/ vactor truck	Every 2 years	$350**
UV Light replacement	Every 2 years	$516
String Cartridge	Approx. 8 times per year or every 50,000 gallons	$27
5 micro bag replacement (2)	Approx. 8 times per year or every 50,000 gallons	$18
StormFilter® Cartridge Replacement	Annual	$750

* Estimated based on the Oregon Bureau of Labor and Industries January 1, 2008 Prevailing Wages for Public Contract in Oregon. Assumes 8 hours for a Group 2 laborer.
** Vactor truck cost estimates based on RSMeans CostWorks 2008.

Conclusions

While one of the goals of this project was to have 100% of the irrigation water needs met with the reclaimed water, the toilet water demands tend to dominate the water usage such that there is not much stored water remaining in the tank by the time it is needed for irrigation. Nonetheless, the system does capture and use a significant proportion (30% to 45%) of the rain that falls on the roof and treats nearly all rain that falls on the portion of the parking lot that is owned and maintained by TOC.

Since the system start-up, the rainwater harvesting system has met approximately 50% of the water demand needed for sewage conveyance. However, during the 2007-2008 wet season (October 1st), the system met nearly 95% of that demand. While there will be more reliance on supplemental City water during the dry season, considering the improvements made to the system in 2007, the continued efforts to optimize the filter replacement schedule, and the current level performance observed it is expected that the system will meet or exceed the project goal of 62% of the water demand needed for sewage conveyance for an average year.

The parking lot StormFilter® manhole appears to provide a high level of treatment of total suspended solids and a moderate level of treatment for total phosphorus and total copper. While treatment of the other modeled constituents (nitrate, dissolved copper, and oil and grease), were not estimated to be treated significantly, these constituents are not expected to be generated from the parking lot at concentrations of significant concern. In addition, due to the high capture and use of rainwater falling on the building rooftop, the total runoff volume and associated pollutants are much less than if conventional drainage practices were employed. For example if all rainfall-runoff was discharged from the site rather than reused, then the total annual average runoff volume would be approximately 125,000 cubic feet rather than approximately 96,000 cubic feet estimated for the site (42,000 cubic feet from the parking lot and 54,000 cubic feet from the building). This represents over a 23% reduction in annual average runoff volume.

References

Harper Houf Peterson Righellis (HHPR), 2005. Drainage Report for: The Oregon Clinic. Prepared for GBD Architects.

6. Construction and Demolition Waste

There was no GIF construction and demolition (C&D) waste recycling requirement for this project. The construction contractor, however, developed a plan and submitted documentation for two LEED™ Material and Resources Credits and one Innovative and Design Process Credit, diverting 95% of C&D waste from landfill disposal.

Because C&D waste analysis was not an M&V requirement for this project, we did not review all the final documents. Sample tracking forms were provided that showed the goals were being met. The information and proposed actions in the planning documents are summarized below:

- Total C&D waste was estimated to be 5,000 tons
- The construction contractor entered into an agreement with AGG Enterprises to provide recycling services for the duration of the project
- Drop boxes for both mixed debris and individual materials (e.g., gypsum and metals) were to be set up on the site
- Contractors and subcontractors were informed about the recycling procedures and responsible individuals were identified
- All drop mixes were to be taken to East County Recycling , where mixed materials would be separated and recycled to the maximum extent possible

Appendix A: Stormwater Modeling

Modeling Introduction

The Storm Water Management Model (SWMM) is a public domain watershed model that is widely used for modeling hydrologic and hydraulic processes affecting runoff from urban and natural drainages. The model can simulate all aspects of the urban hydrologic cycle, including rainfall, infiltration, evapotranspiration, surface and subsurface flow, hydraulic routing through the drainage network, and detention storage. The model is particularly appropriate for analyzing hydrologic effects of development because the model takes into account the effects of precipitation, topography, land use (accounting for any change in impervious cover), soils, and storage and treatment by Best Management Practices (BMPs) on surface runoff, infiltration, and evapotranspiration.

SWMM was designed for continuous rainfall and runoff simulation such that long-term, hydrologic and hydraulic analyses could be performed. The continuous simulations allow for a direct frequency and duration analysis of flows in individual sub-watersheds and main-stem hydraulics. Hourly precipitation data collected at the Portland International Airport from January 1949 through 2005 were used as the precipitation input for the cistern modeling.

SWMM was used to model the effectiveness of a wide range of cisterns for harvesting rainwater. The range of cisterns modeled was extensive so that all cisterns associated with the Portland Office of Sustainability GIF M&V project would be represented by the model results, which could be used to evaluate cistern performance as additional projects are completed.

Cistern Modeling

Cistern Model Parameters and Assumption

SWMM requires input of many model parameters, however three parameters are central to this analysis: rainfall, cistern storage volume, and the cistern emptying rate. The primary model assumptions are:

- Rainfall: historic rainfall data collected at the Portland International Airport is a reasonable representation of the rainfall amount and variability at the project sites. Long-term continuous simulation modeling is believed to provide more accurate estimates of average annual performance than using average annual rainfall depths or a design storm event with a 1-year recurrence interval.

- Storage volume: The cistern storage volume was normalized to a depth over the cistern drainage area so that model results could be applied to a wide range of cistern sizes and drainage areas. A wide range of storage sizes was simulated.

- Emptying rate: Water is not withdrawn from a cistern at a constant rate; however it would be difficult to predict variability in water withdrawals even if the SWMM model could simulate variable outflows, which it cannot. Therefore, the cistern emptying rate was simplified to an average monthly outflow for modeling purposes. A wide range of outflows was simulated.

The model parameters described in Table A-1 represent the area draining to the cisterns. Model controls such as output and print controls[3] or time steps are not listed in the table; only those model parameters that represent physical characteristics are included.

Table A-2 contains the raw pan[4] evaporation data which is referenced in row 2 of Table A-1 and the adjusted values used in the cistern modeling. The pan evaporation data are used as the basis for estimating evaporation for the cistern modeling. A pan coefficient of 0.8 was selected based on information in the Handbook of Hydrology (Maidment, 1993). The pan evaporation data in Table A-2 are also the basis for the evapotranspiration for the ecoroof modeling described in the following section. Evapotranspiration is water loss through evaporation directly from the soil or surface storage and transpiration losses from plants.

[3] Model output controls are used to select how often model results are output (i.e. how many model time steps between output), while the print controls are used to select which information is printed and for which model nodes.

[4] An evaporation pan is a large, screened metal dish containing water used to measure actual water loss. This data is converted to an estimate of water loss (evaporation of evapotranspiration) through the use of a pan coefficient.

Table A-1: Drainage Area Parameters (simulated with the SWMM Runoff Block)

Drainage Area Parameters	Parameter Description	Value	Source / Rationale
Infiltration	The infiltration rate is used to define the saturated hydraulic conductivity of the soil (permeable surface).	Not applicable	The drainage area was assumed to be 100% impervious to simulate a rooftop.
Evaporation	The monthly evaporation rate of rainfall from depression storage.	80% of pan data	Pan evaporation coefficient of 0.80 used for pan evaporation data[5] shown in Table A-2.
Area (ac)	The area of the rooftop.	0.23	Modeled a 10,000 ft^2 square drainage area
Width (ft)	The width of the rooftop.	100	
Length (ft)	The length of the rooftop and the maximum overland flow length of runoff. A longer length results in a longer travel time for runoff and slightly higher evaporation loss.	100	
Imperviousness (%)	The percent of the drainage area that is covered by impervious surface; in this case 100% to simulate a rooftop.	100	
Slope	The slope of the rooftop.	0.02	Based on professional judgment and values recommended in the SWMM Manuals (James and James, 2000).
Manning's Impervious	The Manning's coefficient used to calculate the velocity of overland flow on impervious surfaces.	0.02	
Manning's Pervious	The Manning's coefficient used to calculate the velocity of overland flow on pervious surfaces.	Not applicable	
Depression Storage Impervious Surface	The average depth of depression (i.e. puddles) storage over the impervious surface.	0.01	
Depression Storage Pervious Surface	The average depth of depression (i.e. puddles) storage over the pervious surface.	N/A	

Table A-2: Evaporation Data

	Jan	Feb	Mar	Apr	May	June	July	Aug	Sept	Oct	Nov	Dec	Total
Pan data	1.1	1.5	2.2	3.1	4.7	5.8	7.5	6.1	3.9	2.1	1.3	1	40.3
80% of pan data	0.88	1.2	1.76	2.48	3.76	4.64	6	4.88	3.12	1.68	1.04	0.8	32.24

[5] Portland pan evaporation data obtained online from http://www.wrcc.dri.edu/htmlfiles/westevap.final.html

Table A-3 lists the parameters used to simulate the storage and release of harvested rainwater by the cisterns. Cistern modeling was conducted to represent all 156 possible combinations of cistern parameters from the twelve storage depths and thirteen emptying rates that were simulated. Model results are shown as a series of performance curves, one for each emptying rate, in Figure A-1.

Table A-3: Cistern Parameters (simulated with the SWMM Storage Treatment Block)

Cistern Parameters	Parameter Description	Value(s)	Source / Rationale
Evaporation	Evaporation from the cistern system.	Not simulated	Closed system with little vapor loss
Maximum inflow (cfs)	The maximum inflow rate to the cistern.	100	Inflow value was set very high so bypass would only occur when cistern was full.
Storage Volume - Depth (in)	The cistern storage volume divided by the roof area draining to the cistern. This is the normalized storage volume expressed as a depth of storage over the drainage area.	0.1, 0.25, 0.5, 0.75, 1, 1.5, 2, 3, 4, 5, 6, 8	Wide range of values to encompass any reasonable cistern sizes
Emptying Rate (weeks)	The emptying rate of the cistern expressed in weeks.	0.25, 0.5, 0.75, 1, 1.5, 2, 3, 4, 5, 6, 8, 12, 16	Wide range of values to encompass all anticipated water use rates

Sensitivity analysis was conducted to determine whether the drainage area model parameters have a significant effect on the cistern capture results. Sensitivity analysis was not conducted for the cistern parameters as the few parameters representing the cisterns were already varied for the modeling or the variables were not appropriate for simulation (e.g., evaporation). The parameters varied for the sensitivity analysis were: evaporation rate[6] (ET) time step, slope of the drainage area, runoff path length[7] and impervious surface depression storage. These five model parameters were varied by ± 50% and the model result compared to the result obtained for the reference value. Results of the sensitivity analysis are shown in Figure A-1. For example, decreasing the evaporation rate by 50% resulted in an increase in modeled stormwater capture of 0.4% (a change in capture result to 100.4% of the base level shown in Figure A-1). Model results varied by less than 1.5% for all variations in the sensitivity analysis, indicating that the effect of varying these parameters was insignificant compared to the effect of the rainfall input and cistern sizing.

[6] Evaporation or evapotranspiration which includes transpiration from plants in addition to evaporation losses.

[7] This is the actual length the runoff travels before entering a simulated pipe to the cistern; longer flow lengths result in slightly higher time for evaporation to occur.

Figure A-1: Sensitivity Analysis Results

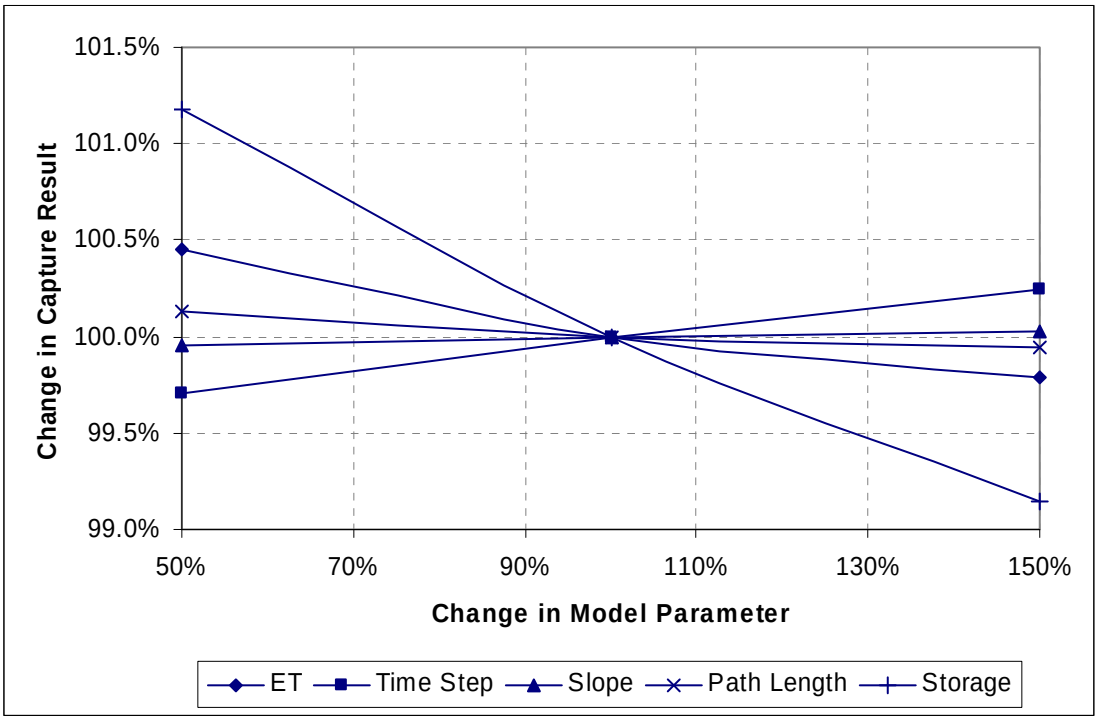

Cistern Model Results

Results for the cistern model runs are shown in Figure A-2 with the emptying rate in weeks shown in the key. These results will be used to estimate the average annual fraction (i.e., percent capture) of runoff volume captured by the cisterns incorporated into the various GIF projects. In instances where the best estimate of cistern size and/ or emptying rate of a cistern used for a GIF project does not agree with the values modeled, interpolation of model result will be used to provide an average annual capture efficiency of the cistern.

Figure A-2. Percent Volume Captured vs. Storage Depth for Various Weekly Emptying Rates

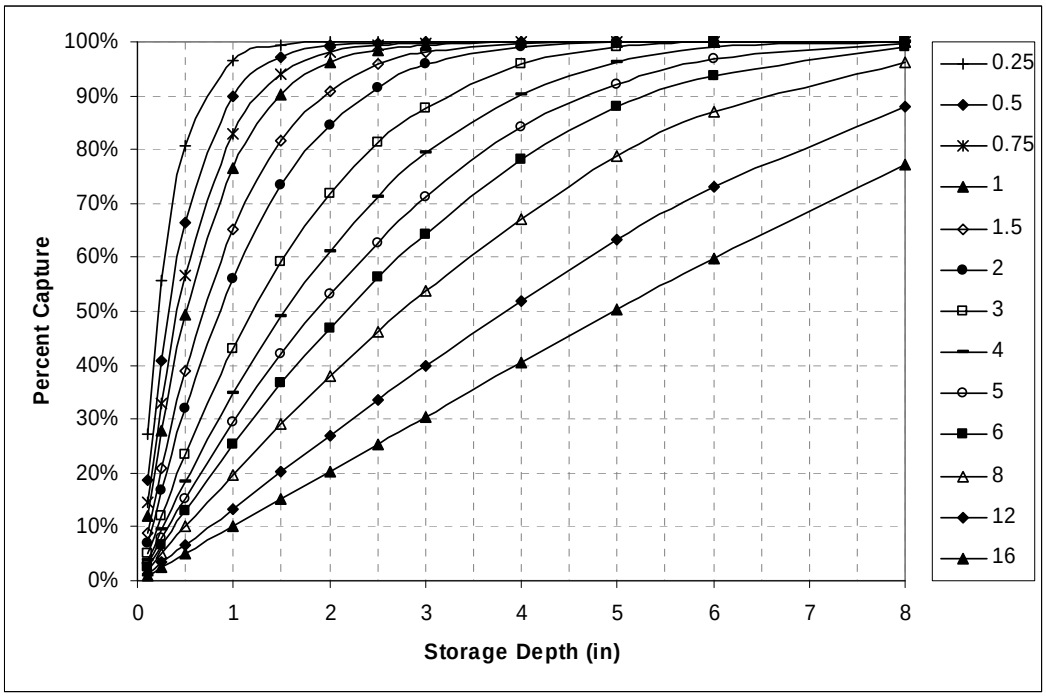

Water Quality Modeling Approach

Methodology Description

An empirical spreadsheet model was developed to estimate annual average stormwater pollutant loads and load reductions from the project site. Empirical models of this type are commonly used to estimate pollutant loads and/or concentrations in stormwater runoff. The model was developed to provide a simple yet effective method for estimating stormwater volume, pollutant loads, and pollutant concentrations from project land uses, as well as volume and load reductions associated with stormwater best management practices (BMPs). The model does not simulate detailed hydraulics or hydrology, which requires more sophisticated modeling and additional data. The model is capable of estimating reductions in pollutant loads from structural BMPs; however, it is not capable of quantifying the effects of source control BMPs (e.g. public education, storm drain stencils) due of the lack of quantitative measurements on the effectiveness of such controls. The model provides estimates of average annual pollutant loads and average runoff concentrations; it does not forecast the variation in runoff concentrations or pollutant loads over storms or between storms.

The model methodology is adapted from an empirical method that has been referred to as the Simple Method (Schueler, 1987). There are two major adaptations of the Simple Method used in this work: 1) runoff concentrations are estimated from local and regional land-use based stormwater monitoring data; and 2) storms with less than 0.1 inches of cumulative rainfall are not modeled because they do not typically contribute to stormwater runoff.

Modeling Steps

The stormwater pollutant loadings modeling methodology consists of the following steps:

1) Estimate the mean annual depth of rainfall from storms greater than 0.1 inches total depth.
2) Delineate the catchments that are to be modeled. For each modeled catchment determine the area, land-use type and acreage, and the proportion impervious surface. The types of land-use categories included in the model are limited to categories for which there is available water quality monitoring information, so the most equivalent land use type is selected.
3) Estimate the average annual stormwater runoff volume in each catchment using empirical relationships between percent impervious cover and runoff volume (Rational formula).
4) Estimate runoff water quality for each catchment from observed stormwater monitoring data from similar land use types.
5) Calculate the annual pollutant loads for each catchment.
6) Sum the flows and loads from individual tributary areas upstream of the BMPs and calculate average catchment areas concentrations.
7) Estimate the treatment performance of the BMPs taking into account the amount of stormwater processed by the facility (percent capture), the amount of volume reduction in the facility, and the estimated pollutant reduction.
8) Calculate the resulting post-treatment pollutant loads and concentrations.

The following sections describe the application of these modeling steps.

Rainfall Data

Nearly 55,000 hours of hourly rainfall data (measurements ≥ zero) collected at Portland International Airport (PDX) from January 1949 through December 2005 were analyzed to determine the average rainfall characteristics for the Portland area. As shown in Figure A-3, ninety percent of area rainfall is less than 0.08 inches per hour and over 99 percent of the analyzed rainfall data are less than 0.20 inches per hour[8]. Average annual rainfall at PDX for the 56 years of data analyzed was 36.6 inches with a standard deviation of 7.3 inches.

[8] Note that inter-hour intensities are likely greater than these average hourly intensities.

Figure A-3: Cumulative Distribution of Rainfall Intensities from the Portland Area.

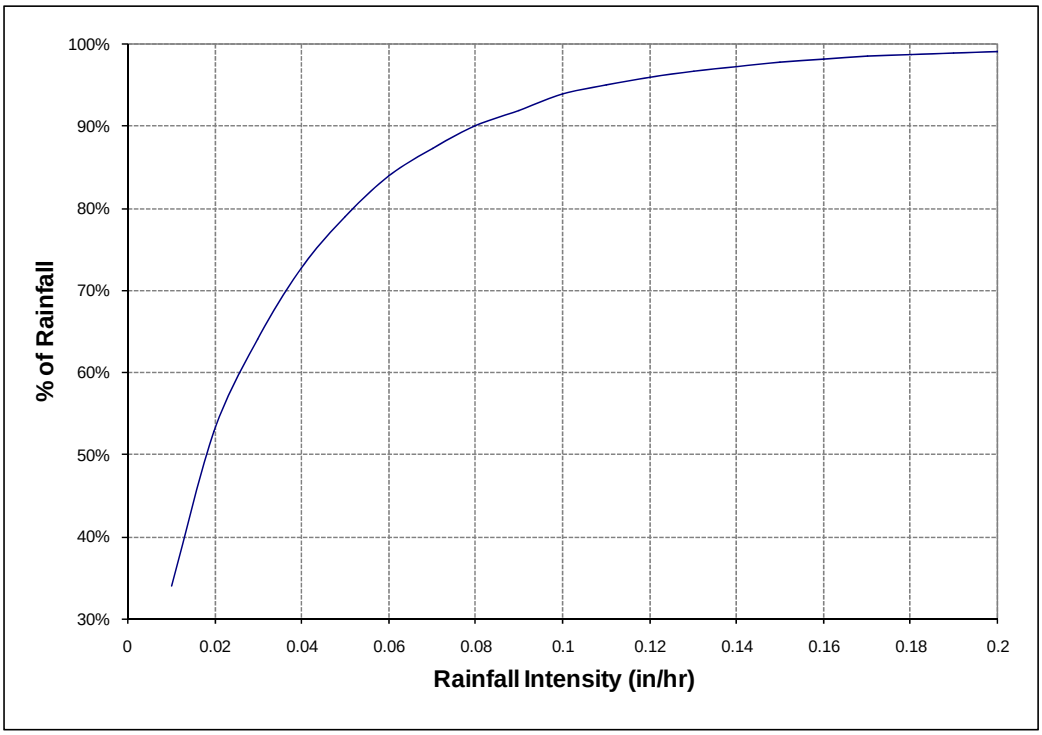

Runoff Volume Calculation Approach

Runoff volumes and flow rates are calculated using the Rational Equation (Novotny and Olem, 1994):

$$Q = R_v \times I \times A \qquad \text{(eq 1)}$$

where:

Q	=	runoff (volume or flow rate)
I	=	rainfall (depth or intensity) (inches or inches/hr)
A	=	drainage area (acres)
R_v	=	mean annual runoff coefficient (dimensionless)

The runoff coefficient is a unit-less value that represents the expected fraction of rainfall that results in runoff. It is primarily a function of the amount of impervious cover in the urban watershed. The runoff coefficient was calculated using the Simple Method (Schueler, 1987), a linear runoff coefficient equation based on a wide range of stormwater-monitoring data which is suitable for this level of analysis.

$$R_v = 0.90 \times (\textit{impervious fraction}) + 0.05 \qquad \text{(eq 2)}$$

The total annual runoff from a catchment is the sum of the runoff volumes from each land-use type in the catchment, as well as any volume reduction occurring within treatment BMPs.

Stormwater Quality Estimation

Pollutant concentrations and loads in stormwater runoff are difficult to quantify. Many factors can affect stormwater quality including source concentration and distribution, topography, soil type, and rainfall characteristics. Moreover, these factors can be highly variable, both spatially and temporally.

A primary factor of stormwater quality is the type of land use within a watershed, which has been shown to significantly affect the types and concentrations of pollutants found in the runoff. Pollutant concentrations in stormwater runoff are estimated in the pollutant loadings model on the basis of land use in the tributary catchment area.

The pollutants included in the model consist of selected representative pollutants for each of the following primary urban pollutant categories: sediment (total suspended solids), nutrients (total phosphorus, nitrate), metals (total and dissolved copper), and hydrocarbons (oil and grease).

Characteristic Land Use Concentrations

The most comprehensive database of local land-use based stormwater quality data was compiled in 1996 by the Oregon Association of Clean Water Agencies (ACWA, 1996). This database includes data collected by a number of major municipalities in Oregon. For this reason, the ACWA database is the principal source of stormwater monitoring data used in the pollutant loadings model.

The ACWA database is comprised of stormwater quality monitoring data from watersheds that are dominated by six specific types of land use: commercial, industrial, mixed use, open space, residential, and transportation. However, the only land uses considered for M&V projects, though not all may be used, are commercial, mixed use, open space, and residential. Industrial and transportation land use types are not included in any of the M&V projects. The following describes the stormwater monitoring data for the four land use categories included in the ACWA database that will be used in the pollutant loading model.

> ***Residential Areas.*** The ACWA database includes stormwater quality data from 10 residential monitoring stations collected in six different municipalities. The residential monitoring stations are not distinguished by the type or density of residential housing and likely include different residential types (single family, multi family) and housing density. The database includes residential monitoring data from a total of 79 storms. However, data analyses conducted by Woodward Clyde Consultants (ACWA, 1996) showed that there is statistically significant difference in the data collected at station R-1, possibly due to the size of the watershed area and/or because it was the only in-stream monitoring station among all residential stations. Based on recommendations in the ACWA report (1996), residential runoff data collected at station R-1 is excluded from the pooled database.

Commercial Areas. The ACWA database includes stormwater quality data for a total of 85 storms collected from nine commercial monitoring stations in six different municipalities. However, based on data analyses conducted by Woodward Clyde Consultants (ACWA, 1996), the monitoring data collected at the three United Sewerage Agency Stations are excluded from the pooled database.

Mixed Use. The ACWA database includes stormwater quality data from 10 mixed-use monitoring stations collected in five different municipalities. The database includes mixed-use monitoring data from a total of 100 storms. However, based on analyses conducted by Woodward Clyde Consultants (ACWA, 1996) mixed-use runoff data collected at station M-1 is excluded from the pooled database.

Open Space & Vacant Areas. The ACWA database includes stormwater monitoring data from only a single open space station located on Balch Creek.

The pooled water quality monitoring data described above were used to estimate a mean and median Event Mean Concentration (EMC) for each pollutant of concern within each land-use category (Table A-4). The mean values were determined with a maximum likelihood estimator method that was used to assign values to the censored data. The medians are used in the pollutant loading model since these are not influenced by outliers in the data sets.

Table A-4: Summary Results from the ACWA (1996) Stormwater Quality Database.

Parameter	Commercial				Mixed Use				Open Space				Residential			
	ns	nd	x_m	μ	ns	nd	x_m	μ	ns	nd	x_m	μ	ns	nd	x_m	μ
TSS (mg/L)	72	72	64	83	39	38	50	78	10	9	16	34	60	59	38	61
Total Phosphorus (mg/L)	80	79	0.26	0.40	40	39	0.23	0.24	9	8	0.17	0.17	61	59	0.21	0.34
Nitrate-N (mg/L)	47	47	0.24	0.38	26	25	0.58	0.65	9	9	2.0	1.9	36	34	0.75	1.0
Dissolved Copper (ug/L)	57	55	7.0	9.0	19	19	4.1	5.8	9	8	4.0	3.8	28	27	4.0	5.8
Total Copper (ug/L)	78	78	17	26	37	31	12	14	10	10	4.0	4.2	53	46	9.0	13
Oil & Grease (mg/L)	50	44	2.6	4.0	25	25	3.3	5.6	6	3	0.50	0.66	44	40	1.6	3.9

ns = number of samples; nd = number of results above the laboratory detection limit; x_m= median; μ = mean

Calculation of Pollutant Loads and Concentration

The pollutant load model estimates the average annual pollutant loads in runoff from each modeled catchment. The pollutant load is the total mass (e.g. pounds) of pollutant in runoff during a given period of time. The pollutant load is calculated by multiplying the estimated mean annual runoff volume and the estimated pollutant concentration (EMC) using the following equation:

$$\text{Flow} \times \text{EMC} \times \text{Conversion Factor} = \text{Load}$$

$$\left(\frac{ft^3}{year}\right) \times \left(\frac{mg}{L}\right) \times \left(6.2428 \times 10^{-5} \frac{lbs / ft^3}{mg / L}\right) = \left(\frac{lbs}{year}\right) \qquad \text{(eq 3)}$$

This equation is used to calculate the annual load from each land use type and the sum of the loads from all land uses provides an estimate of the total load from the entire catchment. However, for most M&V project there will only be one land use per catchment.

An estimate of the average pollutant concentration in stormwater discharges from the modeled sub-catchments is calculated by dividing the total load by the total runoff volume, using the expression below:

$$\text{Concentration} = \text{Total Load} \div \text{Total Runoff} \times \text{Conversion Factor}$$

$$\frac{mg}{L} = \left[\Sigma \frac{lbs}{year} \div \Sigma \frac{ft^3}{year}\right] \times \frac{6.2428 \times 10^{-5}\, lbs/ft^3}{mg/L} \qquad \text{(eq 4)}$$

Stormwater Treatment Estimation

Treatment BMPs are designed to reduce pollutant concentrations and pollutant loads in stormwater runoff to receiving waters. The types of treatment BMPs that can be included in the pollutant loadings model are:

- Extended Dry Detention Ponds
- Retention Ponds (wet ponds)
- Biofiltration systems (e.g. vegetated swales, filter strips)
- Hydrodynamic devices
- Media Filters (e.g. StormFilters, catch basin filters)
- Dry wells

There are three factors that affect model estimates of water quality treatment in the treatment BMPs:

1. The amount (fraction) of stormwater that is processed by the treatment BMP, referred to as the percent capture
2. The amount of volume reduction that occurs within the treatment BMP due to infiltration evaporation and transpiration
3. The reduction in pollutant concentration that occur as a result of processing by the treatment BMP

The following describes the approach used to estimate each of these factors.

Percent Capture

Because large infrequent storms can produce enormous volumes of runoff, it is not practical to size treatment facilities to capture and treat all runoff from such storms. Therefore, treatment BMPs are typically designed to only treat a fraction of the total runoff, corresponding to small to medium sized storms. The BMPs are designed to bypass runoff from large storms in excess of the treatment capacity, which is discharged to receiving waters without treatment. The percent capture is a measure of the average fraction of total runoff that receives treatment.

Stormwater BMPs can be generally classified as either volume-based or flow-based. Volume-based BMPs are facilities or structures designed to treat by detaining and slowly releasing runoff. The storage capacity and drain time are the primary design variables affecting the percent capture of these BMPs. Flow-based BMPs are facilities or structures designed to treat runoff continuously as it passes through them. The design flow rate is the primary design variable affecting the percent capture of these types of BMPs. Example volume-based BMPs are detention basins and retention ponds and example flow-based BMPs are vegetated swales, filter strips, media filters and dry wells.

Using the 56 years of hourly rainfall data from PDX, U.S. EPA SWMM was used to develop percent capture nomographs that could be used to estimate the annual volume of runoff that is captured by modeled BMPs for different design volumes or flow rates and catchment imperviousness values. Volume based BMPs were assumed to completely drain in 72 hours. Figure A-4 provides the percent capture estimates for volume based BMPs and Figure A- provides the percent capture estimates for flow-based BMPs. These plots have been normalized so they are applicable to any catchment and BMP type that may be modeled. The x-axis in Figure A-4 is the unit storage volume expressed in inches of rainfall over the catchment area and the x-axis in Figure A- is the unit flow rate expressed in inches per hour over the catchment area.

Figure A-4: BMP Percent Capture Nomographs for Volume-Based BMPs.

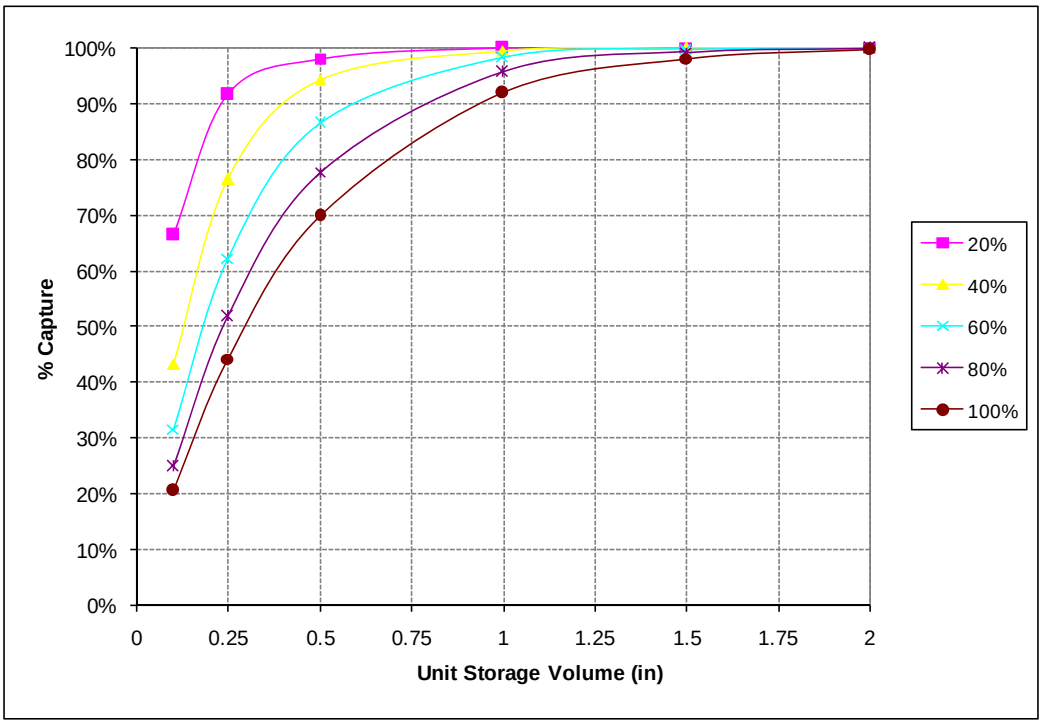

Figure A-5: BMP Percent Capture Nomographs for Flow-Based BMPs.

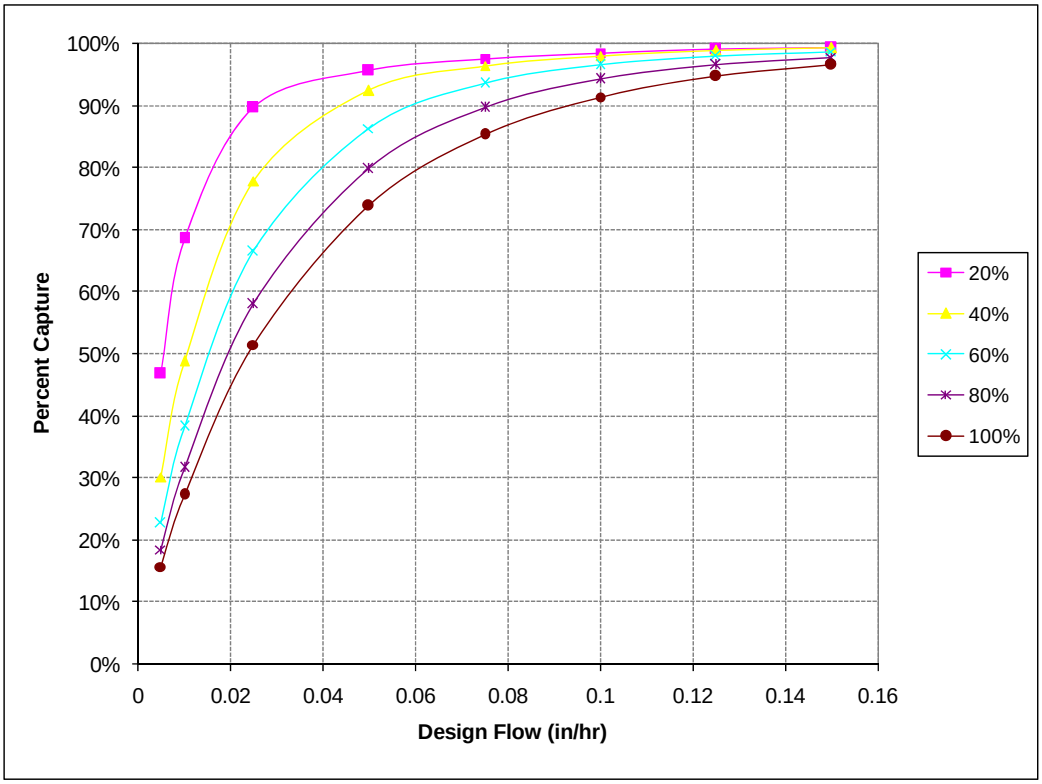

Volume Reduction

A portion of the stormwater that is treated in detention basins and biofiltration system (swales and filter strips) will infiltrate and/or evaporate. This reduces the volume of runoff and pollutant loads that are discharged to receiving waters. Analysis of influent and effluent flow data in the ASCE BMP database by Strecker et al. (2004) indicates that the magnitude of volume reduction can be significant, on the order of 30 percent for water quality basins and 38 percent for vegetated swales (Table A-5). Data for other treatment BMPs types showed no volume loss or small reductions that were not statistically significant.

Table A-5 shows the ratio of mean outflow to mean inflow from flow data in the ASCE BMP database, and shows recommended values for percent volume reduction to use in the water quality model. To be conservative, slightly smaller values are recommended in the water quality model.

Stormwater that is routed to underground injection controls (dry wells) is assumed to be fully captured, with no discharge to receiving waters.

Table A-5: Volume Reduction in Treatment BMPs

BMP Type	**Mean monitored outflow/mean monitored inflow for events greater than or equal to 0.2 watershed inches[a]**	**Percent reduction used in the WQ model**
Detention Ponds	0.70	20
Biofilters	0.62	25
Media Filters	1.0	0
Hydrodynamic Devices	1.0	0
Retention Ponds (wet)	0.93[b]	0
Dry Wells	-	100

[a]/ Strecker et al. (2004); [b]/ Not statistically significantly different than 1.0

Pollutant Reduction

A comprehensive source of BMP performance information is the American Society of Civil Engineers (ASCE) International Stormwater BMP Database (www.bmpdatabase.org). The ASCE BMP database is comprised of carefully examined data from a peer-reviewed collection of studies that have monitored the effectiveness of a variety of BMPs in treating water quality pollutants. All water quality, precipitation, and flow data were collected using standard

monitoring protocols. Typical information included in each study is a description of the BMP, the drainage area with dominant land uses, influent concentrations, effluent concentrations, and removal efficiencies.

The available BMP effluent data in the ASCE BMP database were used to estimate BMP performance. Median values of the effluent EMCs were used as reported in WERF (2005). The median of the EMCs was used rather than the mean because median values are a measure of central tendency that is not biased by outlier values. Mean values can be significantly influenced by outlier values, especially for small datasets. The available storm event monitoring data were used rather than a single result for each BMP study as this provides a larger data set with which to estimate BMP performance.

Table A-6 below shows median effluent concentrations used to estimate performance in the treatment BMPs. The pollutant loading model assumes that all runoff captured by a BMP will reduce the concentration to the value shown in the table. If the runoff concentration is less than the value in the table, then no treatment is assumed and the influent equals the effluent.

Table A-6: Median Effluent Quality from Treatment BMPs in the USEPA/EPA BMP Database

Parameter	Detention Pond	Retention Pond (Wet Pond)	Biofilter (swales & filter strips)	Hydrodynamic separators	Media filtration
TSS (mg/L)	22	11	16	77	8
Total phosphorus (mg/L)	0.28	0.12	0.24	0.16	0.13
Nitrate-N (mg/L)	0.66	0.25	0.26	0.55[b]	0.6
Dissolved Copper (ug/L)	12	5.0	5.2	6.9	6.5
Total Copper (ug/L)	18	5.0	6.0	12	8.5
Oil & Grease (mg/L)[b]	3.0	0.8	2.4	5.0	5.0

References

ACWA, 1996. NPDES Stormwater Monitoring Data Analysis. Prepared for the Association of Clean Water Agencies, prepared by Woodward-Clyde Consultants.

Novotny, V. and H. Olem, 1994. Water Quality Prevention, Identification, and Management of Diffuse Pollution, Van Nostrand Reinhold, New York.

Schueler, T. 1987. Controlling Urban Runoff, A Practical Manual for Planning and Designing Urban BMPs, Metropolitan Washington Council of Governments.

Strecker, E., M.M. Quigley, B.R. Urbonas, J.E. Jones, J.K. Clary, 2001. Determining urban stormwater BMP effectiveness, Journal of Water Resources Planning and Management, May/June.

WERF, 2005. Critical Assessment of Stormwater Treatment and Control Selection Issues, Accepted for publication by the Water Environment Research Federation, prepared jointly by Geosyntec Consultants, Oregon State University, University of Colorado Louisiana State University and Aquatus Environmental.