Rancho Lando

As ranch living makes a notable comeback, owners of these vintage homes are still faced with underinsulated walls, inefficient mechanical systems and outdated finish materials. In a remodel of a 1961 ranch home, owner Pat Lando focused his limited budget on increasing passive solar access, upgrading windows, adding insulation and installing efficient appliances and fixtures. In addition, "Rancho Lando" features Portland's first ecoroof retrofit on an existing home, a rainwater harvesting system and Portland's first living wall, an innovative thin vertical layer of soil and plants that naturally processes stormwater. Recycled content countertops, salvaged trim and cabinetry and rapidly renewable floor coverings round out this green renovation of a timeless classic.

Project Highlights

- **Hydronic heating**
- **Rainwater harvesting and reuse**
- **Gray water reuse**
- **Ecoroof**
- **Vegetated wall**
- **FSC certified and rapidly renewable woods**

Portfolio Contents

- **Final Report**
- **Living Wall Detail Drawings**
- **DJC Article**

City of Portland Green Investment Fund

Grantee Final Report

PROJECT INFORMATION

Name of Primary Contact:	Patrick Lando				
Company or Organization:					
Address:	6607 SE Scott Drive				
City, State & Zip:	Portland, OR 97215				
Phone:	503 679-4066	Fax:	503 233-6601	E-mail:	pat@lando-landscapearchitecture.com

PROJECT DETAILS

Project Name:	Rancho Lando
Project Owner:	Pat and Jody lando
Project Address:	6607 SE Scott Drive
City, State, ZIP:	Portland, OR 97215
Date Project Started:	January 2007
Date of Completion:	December 30, 2009
Building Certifications:	

Design and Construction Team

Architect or Designer:	Patrick Lando
General Contractor:	Orange Design
Landscape Architect:	Patrick Lando
Structural Engineer:	Miller Engineering
Civil Engineer:	
Mechanical Engineer:	
Electrical Engineer:	
Interior Designer:	
Green Building Consultant:	Patrick Lando
Energy Modeler:	EcoHeat

LEED Consultant:	
Additional:	

Building Details

If building has mixed use, please include the sq. ft of each type of use

Gross Floor Area: 3800

Building Type

☐Single-family Residential
☐Multi-family Residential
☐Commercial
☐Industrial
☐Institutional
☐Mixed-Use
☐Other (describe):

Site Conditions (check all that apply)

☐Previously Undeveloped Land
☐Previously Developed Land
☐Brownfield Site
☐Preexisting Structure(s)

Project Type

☐Renovation
☐New Construction
☐Addition

Project Costs

Land Acquisition:	$500,000
Site Clearing/Deconstruction:	$4750 Sewer Repairs $3250 Deconstruction $1100 Asbestos clean-up $1250 Dump & Recycling $5225 Site Clearing / Excavation (Pete Wilson) $4470 Arborist
Site Development:	$5500 Concrete Work (Stairs, walls) $2500 Excavation, Grading (+ owner) $1800 Irrigation (+ owner)
Public Improvements:	NA
Design Fees:	$ 600 Mayes Testing $3500 Structural Engineering $4500 Architectural Drafting Design $1200 Mechanical Engineering $0 Architectural Design by Owner
Permits:	$1,785 Building, Trades(2), Appeal (2)
System Development Charges:	$0.00 NA
Construction:	$123,600 Orange design Build, llc $32000 Siding

	$7700 Painting $8780 Insulation $13050 Roofing (with green roof) $1500 Living Wall (w/o irrigation) $21000 Windows (DJ) $3500 Large Operable Window (w/o glazing, engineering, +owner labor) $15500 Doors & Skylights $1200 Gutters $6600 Wood Stove $45000 Finishes & Fixtures (+ owner, +future work) $3100 Masonry $1400 Additional Plumbing Labor (graywater, rainwater) $5400 Flooring (Cork)
Green Technologies:	$
Other Costs:	$
Total:	$330,740.00

Project Measure Matrix

In the following Matrix, as requested, please provide detailed information about all green products and materials identified in the Grant Agreement, Green Building Practices and Features.

Green Building Project Measure Matrix

Product/ brand or Measure by Category	Model #	Vendor	Cost				Efficiency/ Equipment Ratings or Capacity	Certifications	Incentives, Credits, rebates, grants, etc…
			Design	Material	Equipment	Labor			
Energy									
Hydronic Heating	C85	Rinnai					0.6 - 8.5 gpm		
Hot Water (on-demand)	R85	Rinnai					0.6 - 8.5 gpm		
Dishwasher	SHX33A05UC /43	Bosch						NSF	
Cloths washer	W6441	ASKO							Owner provided
Cloths Dryer	T731	ASKO							Owner provided
Refrigerator	Superba	Kitchenaid							Owner provided
Range / Oven	RSD30S	Dacor							Owner provided
Fixtures	Low flow	Misc.							
Water Efficiency									
Rainwater Harvesting	custom	Concentric Innovations	Owner	$1,500.00	$7,800.00	$1,500.00		NSF	
Gray-water Re-use	250 liter (66 gal)	Brac System	Owner	$300.00	$2,500.00	$		IAMPO	
Dual Flush Toilets (2)	Aquia	Toto		$330.00					
Irrigation: Controller	Pro-C w/ solar sync.	Hunter	Owner		$350.00	$200.00			
Storm-water Management									
Vegetated Roof	NA	NA	Owner	$					Labor and materials
Vegetated Wall	NA	NA	Owner	$					Labor and materials
Materials and Resources									
Insulation	**Agribalance Foam**	Spray-On Foam		$8,800.00					Labor and materials
Flooring: Cork	Solid tile	EcoHaus /				$5,375.00			Labor and materials

		Chuck Blaylock							
Flooring: Polished Concrete		JAF/CO Concrete Specialties				$4,700.00			
Counters	Eco-Cem	NuArt (salvage)		$5,300.00					Labor and materials
Counters	Paperston e	NuArt (salvage)		(included above)					Labor and materials
Counters	Butcherbl ock	Endura		$1,200.00					Labor and materials
Walnut Stair	Urban tree salvage	Harrity Tree Service, Creative Woodworki ng		$1,300.00		$1,560.00			
Trim lumber (salvage)	Mahogany variety	Habitat ReStore		$1,275.00					
FSC Wood Framing									Within contractor's budget
Rainscreen	rainscreen	Paneltech		$32,000.00					Labor and materials
Construction and Demolition Waste Recycling									
Minority Abatement		Asbesto		$1,100.00					
Deconstruction Services		General		$3,250.00					

PROJECT HIGHLIGHTS

Financial Savings & Benefits

Can any soft or hard cost savings be identified from installation of green measures? Please provide actual cost savings.	Not at the moment
Can any operational cost savings from green measures be identified? Please provide actual or projected operational cost savings.	Not at the moment

Environmental Benefits

Please be as specific as possible. Compare against code or a similar conventional building as relevant.

Modeled Energy Savings: *(Annual kWh or therms per sq foot)*	unknown
Estimated Annual Water Savings: *(Annual savings in gallons per person)*	The target for the house is a 60% reduction or 36 gallons per person per day. The assumption is a 55 gallons per person per day baseline
Construction and Demolition Waste Recycling: *(% recycled by weight or volume of total waste)*	95.00%. The project created 30yds of mixed debris(predominately the existing roofing material) and used or reused everything else on-site or on other sites (existing hardwood flooring,...).
Estimated Annual Reduced Storm-water Runoff: *(% total permeable surface area of total site area)*	100% The site previously discharged 100% into the combined system. The project has employed strategies to reach the 100% reduction by depaving the majority of the site, installing a green roof and living wall and for reusing the water in rainwater harvesting system.
Enhanced Habitat: *(% area of restored or new habitat of total site area)*	3600 sf of habitat as green roof, 240 sf of living wall and 1200 sf of native (xeri-scape) landscaping.
Other:	

Community Benefits

Can any specific community benefits be identified? Examples include educational opportunities, public access or community benefit programs.	Community benefits are for the most part our ability to get approved a working gray water re-use system and our other "lesson learned". The ability to transfer our knowledge of the gray-water system is not limited to just the current toilet connection, but to the future exterior use as well. The major lessons learned on the project would be the ability to transfer an ill-insulated and heated home into a model of efficiencies. Also the living wall and green-roof have provided a great lesson as to site conditions and structural requirements needed in a renovation project of our scale.

LESSONS LEARNED

Describe key outcomes from this project. How has the project changed from its original scope and why? Would you recommend the green technology or	Key project elements of our residential remodel specifically funded by the GIF grant include the following: 1. Gray-water system 2. Living wall 3. Eco-roof

practice to other projects? Were there any policy, zoning or building code related issues that affected the project?	4. Rainwater harvesting 5. Premium insulation 6. Hydronic heating system The project remained as originally scoped except for the exterior use of gray-water which has not yet been approved by the State building codes. We have been happy with each component of the remodel; however some certainly involved trial and error. **Gray-water System** – The installation of the manufactured gray-water system was relatively straight forward. The original plan was a site-built system, however with the adoption of the nation plumbing code in late 2009, we purchase a pre-approved gray-water system as allowed by the new code. (The current code does not allow for site-built systems). The permit appeal process is still on-going since the original site built system was not approved, but the rainwater system was approved. The new pre-approved system is allowed outright, and superceeds the appeal process currently in our file. House keeping is in order here to straighten all of this out. The most difficult part was plumbing the drain lines into the tank. This had to be re-worked to include an automatic by-pass when the system is being maintained or when there is a backup in the system's sediment filter. The sediment filter has required maintenance following 2-3 cycles of laundry due to the accumulation of lint in the filter. We are planning to detach the laundry from the gray-water system to reduce this burden. The detaching of the laundry may also reduce the amount of foam which is always present in the toilets. Other modifications to this system have required us to 'future' plumb the gray-water system for irrigation use. The state has assembled task force of experts to research, analyze and structure approvable gray-water re-use systems for the landscape. The task force is targeting the 2011 legislation for final ratification. Recommendations to others: Yes, with caution and education **The Living Wall -** The living wall was constructed with a new design that Pat (homeowner and designer) developed to be easy to install, cost effective and employed recycled material. We used the same soil composition for the living wall as the eco-roof and much of the same plant material. While those features were great, we located the wall on a heavily shaded side of our house which means root development and associated soil stability were slow to develop. As a result, some areas have eroded and required maintenance and re-planting. We also found that we needed to net the wall to keep the sedum cuttings from rolling out of the wall. Recommendations to others: Yes **Eco-roof –** This went very smoothly, including the customized gutter system that allows planting to occur over the gutter. The soil was blown on to ensure good coverage and reduce labor requirements. On top of the waterproof membrane we installed a geotextile netting to reduce soil movement. Plant growth has been great, particularly given how shady our site is and the absence of fertilizer. Typically, we would have added a fertilizer to the green roof for plant establishment, however due to the rainwater harvesting, we opted out of this step. Our dominant plant cover is a sedum mix with wildflowers and healthy clusters of prickly pear cactus. And after a particularity harsh winter in 2008, they are all seem thriving!

	Thankfully we haven't had trouble with clogged gutters – a big plus for the design as that was a concern early on given the amount of debris that falls from the dense tree cover above. We try to avoid walking on the roof as much as possible to prevent damaging the plants and roof, however we did experienced some leaking when the waterproof membrane detached from a metal flashing on the parapet section of the roof. The contractor used an adhesive product in this location (above the soil), however the installer quickly fixed the problem by removing the tape section and heat welding the flashing to the water proofing. Recommendations to others: Yes **Rainwater Harvesting** – during the overall house remodel, we discovered an underground clean-out vault that was likely used for storm water runoff at some point in the past. Because it was no longer needed and our space for a tank above ground was limited, we decided to repair the underground tank and link it to the above ground tank. That required pouring a concrete top to the tank, complete with manhole, and then lining it with a NSF-approved polypropylene liner. The capacity of the underground tank is 600 gallons. The capacity of the above ground tank (under a porch) is 1500 gallons. Currently, the eco-roof acts as our large particulate and first-flush filters. We have allowed for future filters to be incorporated into the system, however it is not apparent that they are needed. We have chosen to delay the collection of rainwater until the green-roof was establish to prevent necessary debris from collecting into the system and creating an unnecessary maintenance issue. Mechanically, the rain water harvesting system is fairly straight forward, feeding most of the fixtures of the home with filtered and (UV) treated water. Irrigation water and backup gray-water supply is untreated rainwater. Recommendations to others: Yes **Premium Insulation –** We decided to use Agribalance 5000, an open-cell, semi-rigid polyurethane spray foam for residential buildings that contains more than 20% renewable agriculture-based products (refined vegetable oils). The product creates a healthier, quieter and more energy-efficient environmental by providing a high R-value. We noticed a dramatic difference in the house pre and post installation. It was installed by Spray-On Foam and Coatings which went very well. However we did have difficulty with overspray on the wood framing which have hindered sheetrock installation. However that problem was promptly corrected by Spray-On Foam and Coatings. Recommendations to others: Yes **Hydronic Heating System** – The hydronic heating system was designed and installed by EcoHeat of Portland. An energy model was performed and their recommendation based on he energy model and our allowable budget was to heat the home with an on-demand water boiler. In general the system heats the home well, however in one zone, there is both gypsum and concrete areas, which heat at different rates. If they can be de-coupled in the future this would certainly be ideal. Other concerns are the heating costs which are still high, however it has only been since the fall of 2009 that our large window has been adequately weatherproofed and new windows were foamed and sealed to the sheathing (a error on the siding contractor). Additional heat loads are the unfinished (and unsealed) basement and crawl space which is next on the "to-do" list and the window system used in the remodel. We chose a commercial storefront windows system with high

	performing glazing due to its aesthetics and the performance provided by the contractor. We are thrilled by the look and operation of the windows, however their thermal performance has been lack luster and will take some additional seal / insulating on the operable components. Our sliding doors are equally rated. The manufacturer has looked at these and agrees that the sealing is less than ideal, however within 'standards' and doesn't recommend replacing them or modifying them. In general we are happy with the system but make a few broad comments being that a boiler system may be better for the home in that on rare sunny days, the front of the house may be collecting thermal heat in the floor slab while the back of the house is heating. Also, our lack of moving air systems does not have the filtering that we are accustom to resulting in a dusty interior. A future ERV /HRV will most likely be looked into. Recommendations to others: Yes with energy modeling and education

IMAGES AND GRAPHICS

Please attach drawings and photos that describe the project and the green technology or practice.

Questions? Please contact Kyle Diesner, 503-823-4166 at OSD. Thank you for taking the time to share what you've learned!

NOTE:
1. ALL METAL STRUCTURE TO BE ALUMINUM

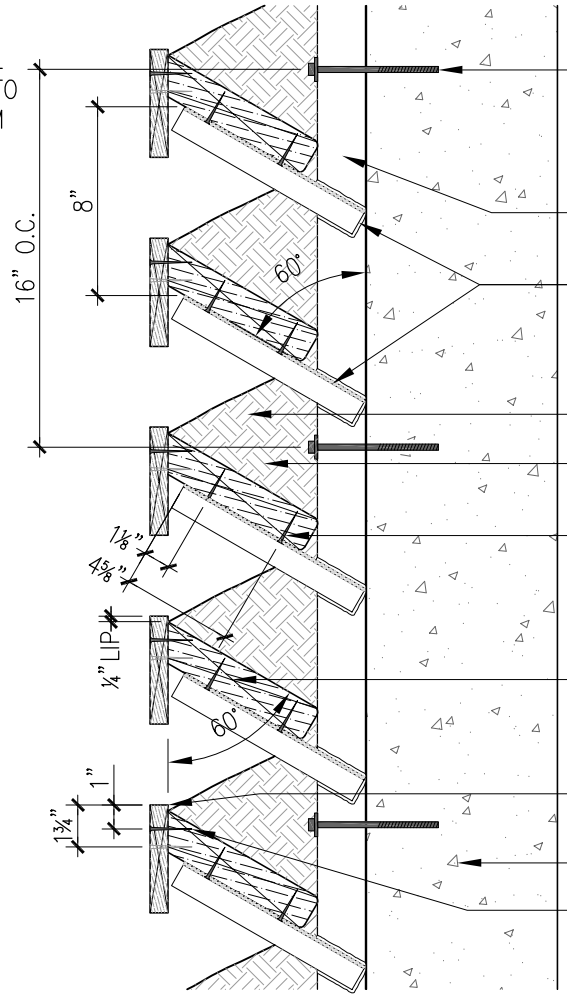

1/2" X 5" ANCHOR BOLTS, EXPOXY INTO EXISTING HOLES

2" SQUARE TUBE UPRIGHTS

1"X 1" METAL ANGLE SUPPORTS WELDED TO SQ. TUBE AT 60° ANGLE. SPACED EVERY 8" VERT.

FINISHED GRADE

CUSTOM SOIL MIX 'LANDO 3-1' (BEYOND)

1 1/2" EXTERIOR SCREWS THROUGH PRE-DRILLED HOLES IN METAL ANGLE SUPPORTS

2X8 PLASTIC LUMBER (RIPPED AT 60° ANGLE TO CREATE PLUMB LINE)

DTL / SHT — CEDAR 1X6- SEE DETAIL FOR VERTICAL LAYOUT

VERTICAL STRUCTURE

1 1/2" EXTERIOR SCREW EVERY 12" (ALTERNATING FOR STABILITY)

#-12	DETAIL: LIVING WALL STRUCTURE	
	CAD FILE: LWALL-STRUCT.DWG	SCALE: 1 1/2" = 1'-0" (0, 3", 6", 9")

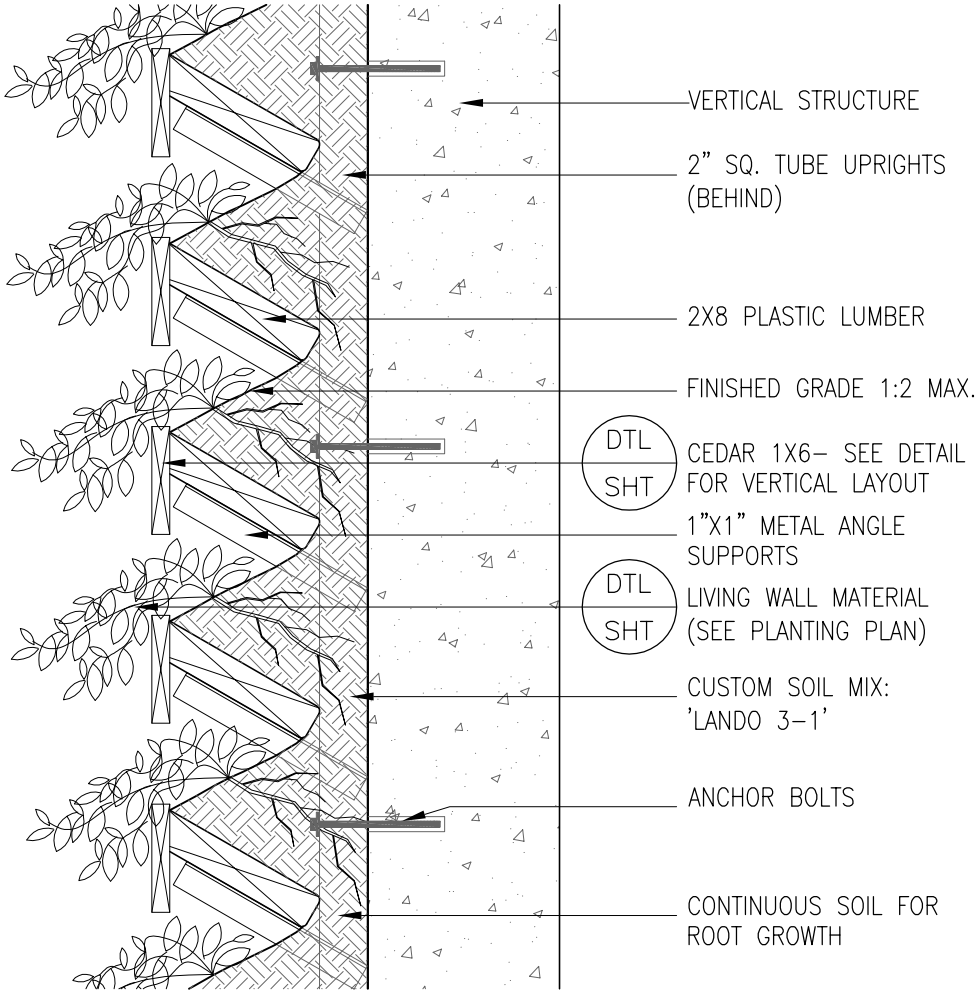

#–12	DETAIL: LIVING WALL PLANTING
	CAD FILE: LWALL–PLANT.DWG
	SCALE: 1 1/2" = 1'–0" (0, 3", 6", 9")

Rancho Lando is ready to grow

POSTED: Friday, June 20, 2008 at 01:00 AM PT
BY: Sam Bennett

At a home in Southeast Portland, crews laid 35 cubic yards of soil on Wednesday for the city's first living wall and retrofit green roof.

The project will demonstrate storm water management and energy efficient technologies with applications for residential and commercial projects. It is funded partly by a grant from the city of Portland's Green Investment Fund, a competitive grant program that supports innovative green building projects.

The home's shake roof was removed, and protective boards and weatherproof membrane were installed shortly thereafter. The roof will be planted with sedums, a wildflower mix, prickly pear cactus and other "hearty plants," according to homeowner Pat Lando.

The living wall will be planted with ferns and sedums. It will have slats going up the wall, like a Venetian blind, to hold the plants.

"Beyond creating a beautiful project and demonstrating the integration of green building practices in a residential setting, our project can make serious strides in water resource management," said Lando, a Portland landscape architect.

He lives in the Mount Tabor home at 6607 S.E. Scott Drive with his wife, Jody, a fisheries consultant and environmental scientist, and two young children.

Pat Lando owns the Portland firm Lando & Associates Landscape Architecture and a manufacturing company for rainwater harvesting equipment called Concentric Innovations.

The Landos call the 1961 Mount Tabor ranch style home Rancho Lando. The home will also have a rainwater harvesting mechanical system. He said the living wall system has financial, aesthetic and ecological potential for commercial projects.

"As we build denser, taller urban cores, additional demands on existing infrastructure are increased and natural aesthetics are decreased," he said. "The living wall system is highly transferable to dense urban projects. The benefits of the wall system are akin to an extensive green roof system by providing reduction in energy loads to buildings, storm water management and introducing ecology into our urban fabric."

Once Lando has the living wall and ecoroof installed, he will begin work on the rainwater harvesting system. Two other completed projects are the installation of both a hydronic heating system, which involved removing the old flooring, and premium insulation.

Installation of a gray-water system, which reuses water from sinks and showers, is projected for 2009. Lando plans to lobby the 2009 state Legislature to change the state plumbing code to allow the reuse of gray water in Oregon. The city would also need to approve gray water reuse.

In addition, the home will have cork flooring and the concrete driveway will be reused for a retaining wall.

Additional energy conservation and production include an expansive passive solar system for the southwest corner of the structure, with the replacement of all windows to meet or exceed today's energy code standards. Lando said he will continue to purchase green power from wind and hydroelectric sources.

"The project will focus on the issues best suited for the site, which are integrating water resources throughout the project, creating a passive solar component to the architecture and decreasing the total energy demand from the home," he said.

Located in a neighborhood with many large trees, the house is not a candidate for solar panels. After buying the house late last year, however, Lando said he realized its potential for a green roof and living wall - both of which are highly effective methods of reducing storm water runoff, he said.

More »