Bid Documents

City of Portland Bureau of Transportation

Plans for Proposed Project

Grading, Drainage, Paving, Striping, Signing, Signals & Roadside Development

NE/SE 50's Bikeway: NE Thompson to SE Woodstock

Multnomah County

June 2013

Project Location

End Signing and Striping

Project Location

S.E. 53rd Ave. at
E. Burnside St.

Project Location

S.E. 53rd Ave. at
S.E. Stark St. St.

Project Location

S.E. 52nd Ave. at
S.E. Lincoln St.

Project Location

S.E. 52nd Ave. at
S.E. Division St.

Project Location

S.E. 52nd Ave. at
S.E. Woodward St.

Project Location

Begin Signing and Striping

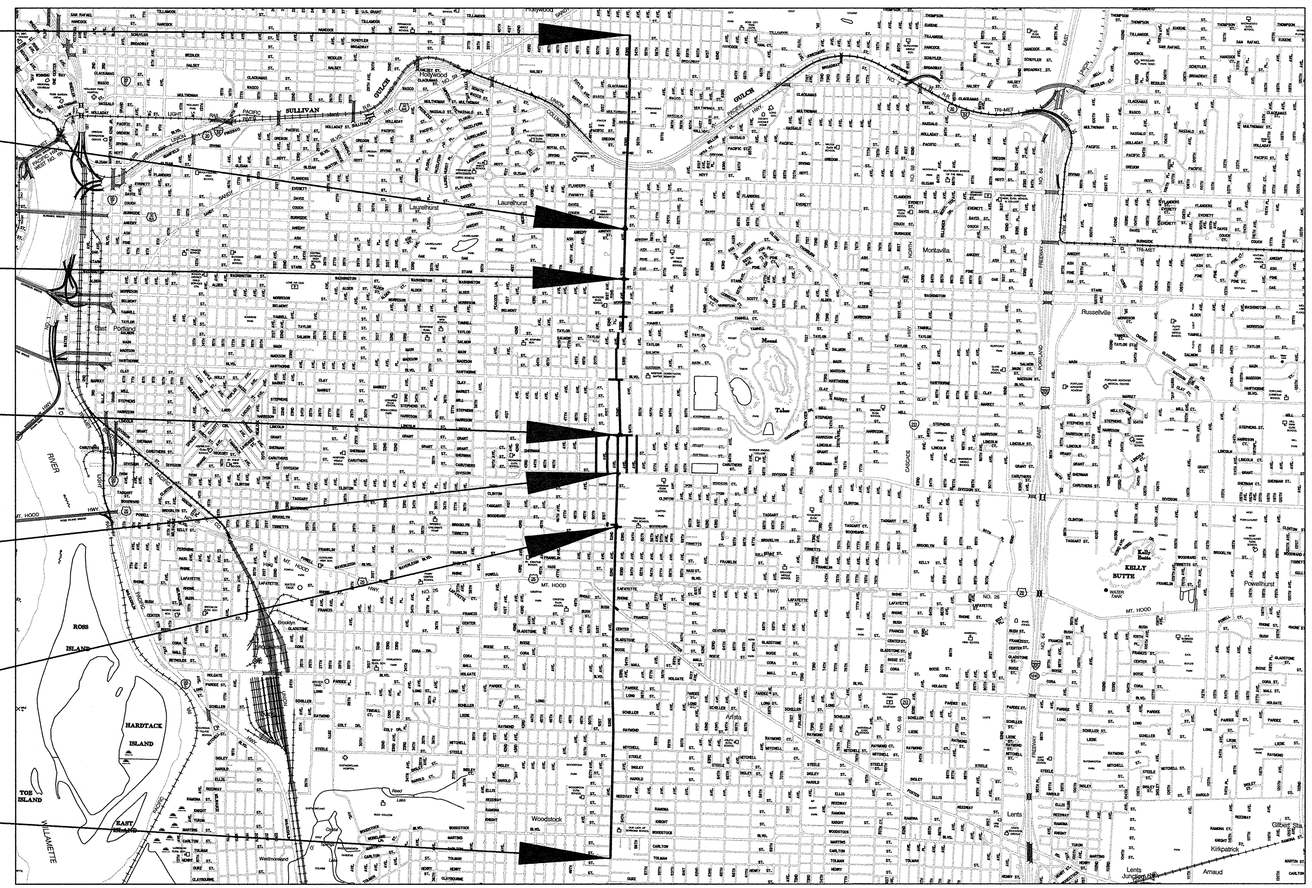

LOCATION MAP

0 2000 4000 6000 8000

FEET

Overall Length of Project – 4.17 Miles

T. 1 N., R. 1 E., W.M.

NOTICE TO EXCAVATORS:
ATTENTION: OREGON LAW REQUIRES YOU TO FOLLOW RULES ADOPTED BY THE OREGON UTILITY NOTIFICATION CENTER. THOSE RULES ARE SET FORTH IN OAR 952-001-0010 THROUGH OAR 952-001-0090. YOU MAY OBTAIN COPIES OF THE RULES BY CALLING THE CENTER.
RULES ARE ALSO LOCATED AT WWW.DIGSAFELYOREGON.COM
NOTE: THE TELEPHONE NUMBER FOR THE OREGON UTILITY NOTIFICATION CENTER IS (503)-232-1987.

POTENTIAL UNDERGROUND FACILITY OWNERS

Dig Safely.

Website: http://www.callbeforeyoudig.org/
Call the Oregon One-Call Center
DIAL 811 or 1-800-332-2344

EMERGENCY TELEPHONE NUMBERS

NW NATURAL GAS	
M-F 7am-6pm	503-226-4211 Ext.4313
AFTER HOURS	503-226-4211
PGE	503-464-7777
CENTURYLINK	1-800-573-1311
BUREAU OF TRANS./MAINT. OPERATIONS	503-823-1700
CITY WATER	503-823-4874
VERIZON	1-800-483-1000

NO.	DATE	DESCRIPTION	APPD.
		REVISION	

DESIGNED BY R. Webb	DATE APPROVED Apr. 2013	
CAD BY D. Ramer C. Shearer	DIV. ENGINEER S. Townsen	PROJECT NO. T00121
CHECKED BY E. Huntsinger		1/4 SECTION
PROJECT NUMBER STP-5900(246)		

REGISTERED PROFESSIONAL ENGINEER 84470PE OREGON SEPTEMBER 14, 2010 EVA B. HUNTSINGER
Expires 6/30/13

APPROVALS:

SUPERVISING ENGINEER — 6/4/13 — REG. PROF. ENGR. NO. 14956PE

CITY ENGINEER — 6/4/13 — REG. PROF. ENGR. NO. 51538PE

CITY OF PORTLAND BUREAU OF TRANSPORTATION

CHARLIE HALES, MAYOR
STEVE TOWNSEN, P.E., CITY ENGINEER

CITY OF PORTLAND OREGON 1851

NE/SE 50s Bikeway: NE Thompson to SE Woodstock

MULTNOMAH COUNTY

Cover Sheet

SHEET NO. 1

Plot Date: 6/4/2013 6:07:11 AM Filename: S:_IL\Design\T00121- 50's Bikeway Woodstock Blvd-Thompson St, SE-NE\CAD\PLAN_SHEETS\SHT_01\COVER\PLOT_SHT_01.dgn

Bid Documents

INDEX OF SHEETS

SHEET NO.	DESCRIPTION
1	Cover Sheet
1A	Index Of Sheets
1B	Symbols And Abbreviations
1C	Sheet Layout Plan
2B	Construction Details
2E-1	Horizontal Alignment Plan S.E. 52nd Ave. at S.E. Woodward St.
2E-2	Horizontal Alignment Plan S.E. 52nd Ave. at S.E. Division St.
2E-3	Horizontal Alignment S.E. 52nd Ave. at S.E. Lincoln St.
2E-4	Horizontal Alignment Plan S.E. 53rd Ave. at S.E. Stark St. St.
2E-5	Horizontal Alignment Plan S.E. 53rd Ave. at E. Burnside St.
2F-1 thru 2F-4	Elevation Detail Plans
3	Street Plan S.E. 52nd Ave. at S.E. Woodward St.
3A	Street Profiles S.E. 52nd Ave. at S.E. Woodward St.
4	Street Plan S.E. 52nd Ave. at S.E. Division St.
4A	Street Profiles S.E. 52nd Ave. at S.E. Division St.
5	Street Plan S.E. 52nd Ave. at S.E. Lincoln St.
5A	Street Profiles S.E. 52nd Ave. at S.E. Lincoln St.
6	Street Plan S.E. 53rd Ave. at S.E. Stark St.
6A	Street Profiles S.E. 53rd Ave. at S.E. Stark St.
7	Street Plan S.E. 53rd Ave. at E. Burnside St.
7A	Street Profiles S.E. 53rd Ave. at E. Burnside St.
	B.E.S. - STORMWATER PLANS
D-1	Stormwater Plan S.E. 52nd Ave. at S.E. Woodward St.
D-2	Stormwater Plan S.E. 52nd Ave. at S.E. Division St.
D-3	Stormwater Plan S.E. 52nd Ave. at S.E. Lincoln St.
D-4	Stormwater Plan S.E. 53rd Ave. at S.E. Stark St. St.
D-5	Stormwater Plan S.E. 53rd Ave. at E. Burnside St.
D-6	Stormwater Profiles
D-7	Pipe Data Sheet
	PERMANENT SIGNING AND STRIPING PLANS
S-1	Permanent Signing & Striping Plan Sta."52" 56+23.00 to Sta."52" 62+52.17
S-2	Permanent Signing & Striping Plan Sta."52" 62+52.17 to Sta."52" 68+81.80
S-3	Permanent Signing & Striping Plan Sta."52" 68+81.80 to Sta."52" 75+12.17
S-4	Permanent Signing & Striping Plan Sta."52" 75+12.17 to Sta."52" 81+42.17
S-5	Permanent Signing & Striping Plan Sta."52" 81+42.17 to Sta."52" 87+72.17
S-6	Permanent Signing & Striping Plan Sta."52" 81+42.17 to Sta."52" 94+02.44
S-7	Permanent Signing & Striping Plan Sta."52" 94+02.44 to Sta."52" 100+33.17
S-8	Permanent Signing & Striping Plan Sta."52" 100+33.17 to Sta."52" 106+63.59
S-9	Permanent Signing & Striping Plan Sta."52" 106+63.59 to Sta."52" 112+93.57
S-10	Permanent Signing & Striping Plan Sta."52" 112+93.57 to Sta."52" 119+23.56
S-11	Permanent Signing & Striping Plan Sta."52" 119+23.56 to Sta."52" 125+53.56
S-12	Permanent Signing & Striping Plan Sta."52" 125+53.56 to Sta."52" 131+83.59
S-13	Permanent Signing & Striping Plan Sta."52" 131+83.59 to Sta."52" 138+13.58
S-14	Permanent Signing & Striping Plan Sta."52" 138+13.58 to Sta."52" 144+43.57
S-15	Permanent Signing & Striping Plan Sta."52" 144+43.57 to Sta."52" 150+73.62
S-16	Permanent Signing & Striping Plan Sta."52" 150+73.62 to Sta."52" 157+03.70
S-17	Permanent Signing & Striping Plan Sta."52" 157+03.70 to Sta."52" 163+33.57

INDEX OF SHEETS CONT'D.

SHEET NO.	DESCRIPTION
	PERMANENT SIGNING AND STRIPING PLANS CONT.
S-18	Permanent Signing & Striping Plan Sta."52" 163+33.57 to Sta."52" 169+63.52
S-19	Permanent Signing & Striping Plan Sta."52" 169+63.52 to Sta."52" 175+94.23
S-20	Permanent Signing & Striping Plan Sta."52" 175+94.23 to Sta."52" 182+25.08
S-21	Permanent Signing & Striping Plan Sta."52" 182+25.08 to Sta."52" 188+54.89
S-22	Permanent Signing & Striping Plan Sta."52" 188+54.89 to Sta."52" 194+85.34
S-23	Permanent Signing & Striping Plan Sta."52" 194+85.34 to Sta."53" 268+02.42
S-24	Permanent Signing & Striping Plan Sta."53" 268+02.42 to Sta."53" 274+02.41
S-25	Permanent Signing & Striping Plan Sta."53" 274+02.41 to Sta."53" 280+33.16
S-26	Permanent Signing & Striping Plan Sta."53" 280+33.16 to Sta."53" 286+63.16
S-27	Permanent Signing & Striping Plan Sta."53" 286+63.16 to Sta."53" 292+63.15
S-28	Permanent Signing & Striping Plan Sta."53" 292+63.15 to Sta."53" 298+93.25
S-29	Permanent Signing & Striping Plan Sta."53" 298+93.25 to Sta."53" 305+23.25
S-30	Permanent Signing & Striping Plan Sta."53" 305+23.25 to Sta."53" 311+53.09
S-31	Permanent Signing & Striping Plan Sta."53" 311+53.09 to Sta."53" 317+43.49
S-32	Permanent Signing & Striping Plan Sta."53" 317+43.49 to Sta."53" 323+73.49
S-33	Permanent Signing & Striping Plan Sta."53" 323+73.49 to Sta."53" 330+09.76
S-34	Permanent Signing & Striping Plan Sta."53" 330+09.76 to Sta."53" 336+39.75
S-35	Permanent Signing & Striping Plan Sta."53" 336+39.75 to Sta."53" 342+69.75
S-36	Permanent Signing & Striping Plan Sta."50" 450+00.00 to Sta."50" 450+78.67
S-37	Permanent Signing & Striping Plan W/Speed Bumps Sta."51" 551+00.00 to Sta."51" 556+77.59
S-38	Permanent Signing & Striping Plan W/Speed Bumps Sta."51" 551+00.00 to Sta."51" 560+98.00
S-39	Permanent Signing & Striping Plan W/Speed Bumps Sta."53" 253+00.00 to Sta."53" 258+73.35
S-40	Permanent Signing & Striping Plan W/Speed Bumps Sta."53" 258+73.35 to Sta."53" 262+90.01
S-41	Permanent Signing & Striping Plan W/Speed Bumps Sta."54" 754+00.00 to Sta."54" 759+71.60
S-42	Permanent Signing & Striping Plan W/Speed Bumps Sta."54" 759+71.60 to Sta."54" 763+90.00
S-43	Permanent Signing Legends - Existing Signs
S-44	Permanent Signing Legends - New Signs
S-45	Permanent Signing Legends - Wayfinding Signs
S-46	Sign and Post Data Table
S-47 thru S-51	Sign and Post Data Table Continued
	TRAFFIC SIGNAL PLANS
TS-1	Traffic Signal Plan Legend
TS-2	Signalization Plan E. Burnside St. & 53rd Ave.
TS-3	Traffic Signal Wiring Diagram E. Burnside St. & 53rd Ave.
TS-4	Traffic Signal Signalization Plan S.E. Division St. & 52nd Ave.
TS-5	Traffic Signal Wiring Diagram S.E. Division St. & 52nd Ave.
TS-6	Traffic Signal Signalization (RRFB) Plan S.E. 52nd Ave. @ Woodward
TS-7	Traffic Signal Interconnect Plan E. Burnside St. 53rd to 55th
TS-8	Bicycle Detections SE Powell and 52nd SE Foster and 52nd

Standard Drg. Nos.

- P-400 - Sign Placement
- P-405 - Breakaway Traffic Sign Supports
- P-406 - Breakaway Dome Traffic Sign Supports
- P-410 - Sign Bracket, Cap Details
- P-411 - Sign Bracket, Strong-Back Details
- P-412 - Street Name Sign Hardware Details
- P-420 - Street Name Sign Detail
- P-434 - Pavement Markings Standard Detail Blocks
- P-435 - Pavement Markings Standard Detail Blocks
- P-436 - Pavement Markings Standard Detail Blocks
- P-440 - 14' Asphalt Local Speed Bump
- P-450 - Shared Lane Pavement Markings - Local Service Streets
- P-532 - Curb Tight Sidewalk Partially Lowered Driveway
- P-536 - Driveway Connection Detail
- P-601 - Single Mast Arm Pole & Weld Details
- P-604 - Mast Arm Pole Terminal Cabinet, Flange & Base Plate Details
- P-606 - Signal Pole Footing & Anchor Bolts Type 1
- P-607 - Signal Pole Footing & Anchor Bolts Type 2 & 3
- P-608 - Signal Pole Footing Frangible Base
- P-609 - Signal Pole Footings - Spread & Vaulted Basement
- P-610 - Base-Mounted Signal Post Footing & Type 332 Cabinet Foundation Details
- P-620 - "APS" Pushbutton Assembly
- P-620(A) - APS 2-Wire Pushbutton Schematic Central Control Unit & Fail-Safe Interconnect Board Cabinet
- P-620(B) - APS 4-Wire Push Button Schematic
- P-622 - Pedestrian Signal Mounting on Steel and Wood Poles
- P-623 - Pedestrian Signal, Sensor, And Pushbutton on Frangibles, Ornamentals, and Pipe Posts
- P-624 - Controller Cabinet and Communication Interface Details
- P-625 - Service Installation on Steel and Wood Poles
- P-626 - Service Cabinets for Steel and Wood Poles and on Pedestals
- P-627 - Signal Equipment Pole & Mast Arm Mounted Details
- P-628 - Signal Equipment Span Wire Installation Details
- P-629 - Overhead Street Name and Aluminum Sign Mounting Details
- P-630 - Overhead Cable Pole Connection Details
- P-632 - Pull Box Type A & B Details
- P-633 - Communications Box Type C & D Details
- P-634 - Detector Loop & Loop Pocket Details
- P-635 - Cable Placement and Wood Pole Framing Details (1 of 3)
- P-636 - Cable Placement and Wood Pole Framing Details (2 of 3)
- P-637 - Cable Placement and Wood Pole Framing Details (3 of 3)
- P-638 - Cable Placement and Clearance Details
- P-639 - Rectangular Rapid Flash Beacon (AC Powered) Pole Assembly Detail
- P-640 - Rectangular Rapid Flash Beacon (Solar Powered) Pole Assembly Detail
- RD364 - Concrete Inlets Type G-1, G-2, G-2M, & G-2MA
- RD366 - Concrete Inlets Type CG-1, CG-2 and Curb Inlet Channel
- RD376 - Miscellaneous Drainage Structures Siphon Box, Inlet Cap & Inlet Adjustment
- RD700 - Curbs
- RD705 - Islands
- RD720 - Sidewalks
- RD755 - Sidewalk Ramp Details
- RD759 - Truncated Dome Detectable Warning Surface, Details and Locations
- RD1010 - Inlet Protection
- RD1040 - Sediment Fence, Supported Sediment Fence, Unsupported
- TM500 - Pavement Markings Standard Detail Blocks
- TM501 - Pavement Markings Standard Detail Blocks
- TM503 - Pavement Markings Standard Detail Blocks

Standard Det. Nos.

- DET4560 - Pavement Markings Detail Blocks

NO.	DATE	DESCRIPTION	APPD.
		REVISION	

DESIGNED BY R. Webb	DATE APPROVED Apr. 2013	
CAD BY D. Ramer C. Shearer	DIV. ENGINEER S. Townsen	PROJECT NO. T00121
CHECKED BY E. Huntsinger		1/4 SECTION 2836,2936,3036 3136,3236,3336 3436,3536,3636
PROJECT NUMBER STP-5900(246)		

REGISTERED PROFESSIONAL ENGINEER 84470PE OREGON SEPTEMBER 14, 2012 EVA B. HUNTSINGER
Expires 6/30/13

APPROVALS:
SUPERVISING ENGINEER — REG. PROF. ENGR. NO. 14956PE
CITY ENGINEER — REG. PROF. ENGR. NO. 51538PE

CITY OF PORTLAND BUREAU OF TRANSPORTATION
CHARLIE HALES, MAYOR
STEVE TOWNSEN, P.E., CITY ENGINEER

NE/SE 50s Bikeway: NE Thompson to SE Woodstock
MULTNOMAH COUNTY

Index of Sheets

SHEET NO. 1A

Plot Date: 4/2/2013 11:8:39 AM Filename: S:_IL_Design\T00121 - 50's Bikeway Woodstock Blvd-Thompson St, SE-NE\CAD\PLAN_SHEETS\SHT 01A-01\INDEX OF SHEETS\PLOT_SHT_01A-01.dgn

Bid Documents

LEGEND

Boundary
- Proposed boundary, stormwater facility

Rail
- RLB — Existing rail, buried
- Existing rail, control box
- Proposed rail, control box
- Existing rail, crossing gate
- Proposed rail, crossing gate
- RR — Existing/Proposed rail, signal
- RR — Existing/proposed rail, switch
- RL — Existing rail, track
- RL — Proposed rail, track

Road
- Existing road, bike rack bench
- Proposed road, bike rack bench
- 4+00 — Existing road, control line
- 4+00 — Proposed road, control line
- Existing road, curb back
- Proposed road, curb back
- Existing road, curb extruded
- Proposed road, curb extruded
- Proposed road, directional flow arrow
- EOP — Existing road, edge asphalt
- EOP — Proposed road, edge asphalt
- EOP — Existing road, edge brick
- EOP — Proposed road, edge brick
- EC — Existing road, edge concrete
- EC — Proposed road, edge concrete
- Existing road, driveway-ramp
- Proposed road, driveway-ramp
- EOG — Existing road, edge gravel
- EOG — Proposed road, edge gravel
- GR — Existing road, guardrail
- GR — Proposed road, guardrail
- WH WH — Existing/proposed road gutter, weep hole
- Existing road, gutter
- Proposed road, gutter
- Existing road, gutter lip
- Proposed road, gutter lip
- HR HR — Existing/proposed road, horse ring
- SL SL — Existing/proposed road, light
- M M — Existing/proposed road, mail box
- PK PK — Existing/proposed road, parking meter
- B B — Existing/proposed road, post
- SAW — Existing road, saw cut line
- SAW — Proposed road, saw cut line
- Existing road, sidewalk
- Proposed road, sidewalk
- Proposed road, sidewalk scoring line
- Existing/proposed road, sign
- S.W. — Existing road, street name
- Existing/proposed road, striping. "W" 4"white
- Existing/proposed road, striping. "W-2" 8"white
- Existing/proposed road, striping. "Y" 4"yellow
- Existing/proposed road, striping. "WB" 4"white broken
- Existing/proposed road, striping. "WB-P" 4"white broken
- Existing/proposed road, striping. "YB" 4"yellow broken
- Existing/proposed road, striping. "YB-P" 4"yellow broken
- Existing/proposed road, striping. "NPL" no-pass lt 4"yellow
- Existing/proposed road, striping. "NPL-P" no-pass lt 4"yellow
- Existing/proposed road, striping. "NPR" no-pass rt 4"yellow
- Existing/proposed road, striping. "NPR-P" no-pass rt 4"yellow
- Existing/proposed road, striping. "TWL" two-way left turn 4"yellow
- Existing/proposed road, striping. "TWL-P" two-way left turn 4"yellow
- Existing/proposed road, striping. "WD" 4"white dotted
- Existing/proposed road, striping. "WD-2" 8"white dotted
- Existing/proposed road, striping. "YD" 4"yellow dotted

Road cont'd.
- Existing/proposed road, striping. "LD" & "DLL-2" 8"white lane drop
- Existing/proposed road, striping. "D" double no-pass two 4"yellow
- Existing/proposed road, striping. "ND" narrow dbl no-pass two 4"yellow
- Existing/proposed road, striping. "NDW"narrow dbl no lane change two 4"white
- Existing/proposed road, striping. "S" stop bar 1' white bar (or single "CW")
- Existing/proposed road, striping. "S-2" stop bar 2' white bar (or single "CW")
- Existing/proposed road, striping. "CW-SC" staggered continental crosswalk 2' white bars
- Existing/proposed road, striping. "CW-SC-P" staggered continental crosswalk 2' white bars
- ONLY ONLY — Existing/proposed road, striping symbols. Standard Stencils: "BS" Bike Lane, "BUS"Bus, "ON"Only, "HOV"Diamond, Arrows, Railroad xing/other
- SF — Existing road, sediment fence
- SF — Proposed road, sediment fence
- Existing/Proposed road, truncated dome detectable warning surface
- VG — Existing road, valley gutter
- VG — Proposed road, valley gutter

Sewer
- SWR — Existing sewer combination, main
- SWR — Proposed sewer combination, main
- CO CO — Existing/proposed sewer sanitary, cleanout
- SAN — Existing sewer sanitary, main
- SAN — Proposed sewer sanitary, main
- #4 — Existing sewer sanitary, manhole text
- S S — Existing/proposed sewer sanitary, manhole
- Existing sewer storm, curb back
- Proposed sewer storm, curb back
- Existing sewer storm, grate
- Proposed sewer storm, grate
- Existing sewer storm, gutter
- Proposed sewer storm, gutter
- Existing/proposed sewer storm, inlet field
- Existing/proposed sewer storm, inlet
- IE=607.71 — Existing sewer storm, inlet text
- STM — Existing sewer storm, main
- STM — Proposed sewer storm, main
- ST ST — Existing/proposed sewer storm, manhole
- SE SE — Existing/proposed sewer storm, manhole sed
- #4 — Existing sewer storm, manhole text
- SU SU — Existing/proposed sewer storm, sump manhole
- #4 — Existing sewer storm, sump manhole text
- Existing sewer storm, trash rack
- Proposed sewer storm, trash rack

Structure
- Existing structure, bridge
- Proposed structure, bridge
- Existing structure, building
- Proposed structure, building
- FIRST FLOOR ELEV 0.00 — Existing structure, building elev text
- Existing structure, column
- Proposed structure, column
- Existing structure, doorway
- Proposed structure, doorway
- Existing structure, fence
- Proposed structure, fence

Structure cont'd.
- Existing structure, gate
- Proposed structure, gate
- Existing str, play equipment
- Proposed str, play equipment
- Existing structure, stairs
- Proposed structure, stairs
- EW — Existing structure, wall
- EW — Proposed structure, wall
- YL YL — Existing/proposed structure, yard light

Survey
- 7618 — Existing survey, address numbers
- Existing/proposed survey, benchmark
- BH BH — Existing/proposed survey, bore hole
- CP 101, GPS 82, WP 904, RP 140 — Existing survey, control point
- Existing survey, clearance
- Proposed survey, clearance
- CLEAR ELEV 0.00 — Existing survey, clearance point
- ESMT — Existing survey, easement perm
- ESMT — Proposed survey, easement perm
- TCE — Existing survey, easment temp
- TCE — Proposed survey, easement temp
- Existing survey, lot line
- Proposed survey, lot line
- Existing survey, monitor point
- BS IR IP — Existing survey, monument
- 1/2" IP — Existing survey, monument text
- TOP 0.00 IE 0.00 — Existing survey, pipe (top/inv. el.)
- BLDG DOOR — Existing survey, point codes
- 614.64 — Existing survey, point elevations
- Existing survey, point markers
- 54030 — Existing survey, point names
- WOOD CURB — Existing survey, point notes
- Existing survey, resolved centerline
- Existing survey, resolved R/W
- Existing survey, R/W
- Proposed survey, R/W

Topography
- Existing topo, contour major
- Proposed topo, contour major
- Existing topo, contour minor
- Proposed topo, contour minor
- Existing topo, DTM boundary
- Existing topo, DTM triangles
- DCL — Existing topo, ditch centerline
- DCL — Proposed topo, ditch centerline
- Existing topo, edge rock
- Proposed topo, edge rock
- WL — Existing topo, edge water
- WL — Proposed topo, edge water
- Existing topo, edge wetland
- Proposed topo, edge wetland
- Existing topo, grade break
- Proposed topo, grade break
- TOE — Existing topo, slope toe
- TOE — Proposed topo, slope toe
- TOP — Existing topo, slope top
- TOP — Proposed topo, slope top
- Existing topo, spot elevation

Traffic
- Existing traffic, control box
- Proposed traffic, control box
- J J — Existing/proposed traffic, junction box
- DONT WALK — Existing/proposed traffic, pedestrian pole
- Existing traffic, signal loop wire
- Proposed traffic, signal loop wire
- Existing/proposed traffic, signal pole base
- Existing traffic, impact attenuator
- Proposed traffic, impact attenuator

Utilities
- TV — Existing utility, CATV UG
- TV — Proposed utility, CATV UG
- SP SP — Existing/proposed utility, fiber optic standpipe
- FO — Existing utility, fiber optic UG
- FO — Existing utility, fiber optic UG
- JF — Existing utility, jet fuel UG
- GM GM — Existing/proposed utility, gas meter
- G — Existing utility, gas UG
- G — Proposed utility, gas UG
- Existing utility, gas vault
- Proposed utility, gas vault
- GV GV — Existing/proposed utility, gas valve
- PP PP — Existing/proposed utility, pole
- Existing/proposed utility, power anchor
- Existing utility, power box
- Proposed utility, power box
- P P — Existing/proposed utility, power manhole
- PM PM — Existing/proposed utility, power meter
- E — Existing utility, power UG
- E — Proposed utility, power UG
- Existing utility, power vault
- Proposed utility, power vault
- PP PP — Existing/proposed utility, street light
- T T — Existing/proposed utility, telephone manhole
- T T — Existing/proposed utility, telephone pedestal
- TEL — Existing utility, telephone UG
- TEL — Existing utility, telephone UG
- FF — Existing utility, unknown fuel filler
- MH — Existing utility, unknown manhole
- #4 — Existing utility, unknown manhole text
- UV — Existing utility, unknown valve
- Existing utility, unknown vault
- E/O — Existing utility, wire OH
- E/O — Proposed utility, wire OH

Vegetation
- Existing vegetation, brush
- Proposed vegetation, brush
- Existing vegetation, drip line
- Existing vegetation, edge
- Proposed vegetation, edge
- Existing vegetation, edge planter
- Proposed vegetation, edge planter
- LN — Existing vegetation, lawn
- LN — Proposed vegetation, lawn
- Existing/proposed vegetation, shrub
- 26" Dia 30' Spread — Existing vegetation, text
- Existing/proposed vegetation, tree

Water
- FDC FDC — Existing/proposed water, FDC
- Existing/proposed water, fountain
- Existing/proposed water, hydrant
- Existing/proposed water, irrigation box
- Existing/proposed water, irrigation sprinkler
- IR — Existing water, irrigation
- IR — Proposed water, irrigation
- W — Existing water, main
- W — Proposed water, main
- W W — Existing/proposed water, manhole
- WM WM — Existing/proposed water, meter
- SP SP — Existing/proposed water, standpipe
- Existing/proposed water, valve
- Existing/proposed water, vault

ODOT/PBOT Inlets
- G-1 G-1 — Existing/proposed concrete inlet, type G-1 (RD364)
- G-2 G-2 — Existing/proposed concrete inlet, type G-2 (RD364)
- G-2M G-2M — Existing/proposed concrete inlet, type G-2M (RD364)
- G-2MA G-2MA — Existing/proposed concrete inlet, type G-2MA (RD364)
- CG-1 CG-1 — Existing/proposed concrete inlet, type CG-1 (RD366)
- CG-2 CG-2 — Existing/proposed concrete inlet, type CG-2 (RD366)
- CG-3(1) CG-3(1) — Existing/proposed concrete inlet, type CG-3 (RD372)
- RD374 RD374 — Existing/proposed field inlet (RD374)

BES Inlets
- Existing/proposed concrete inlet (BES type Metal)
- Existing/proposed concrete inlet (BES type Concrete)
- BH BH — Existing/proposed concrete inlet (BES type Beehive)
- Existing/proposed concrete inlet (BES type Metal Modified)
- Existing/proposed channel & grate inlet (BES type channel & grate)

SECTION & DETAIL IDENTIFICATION

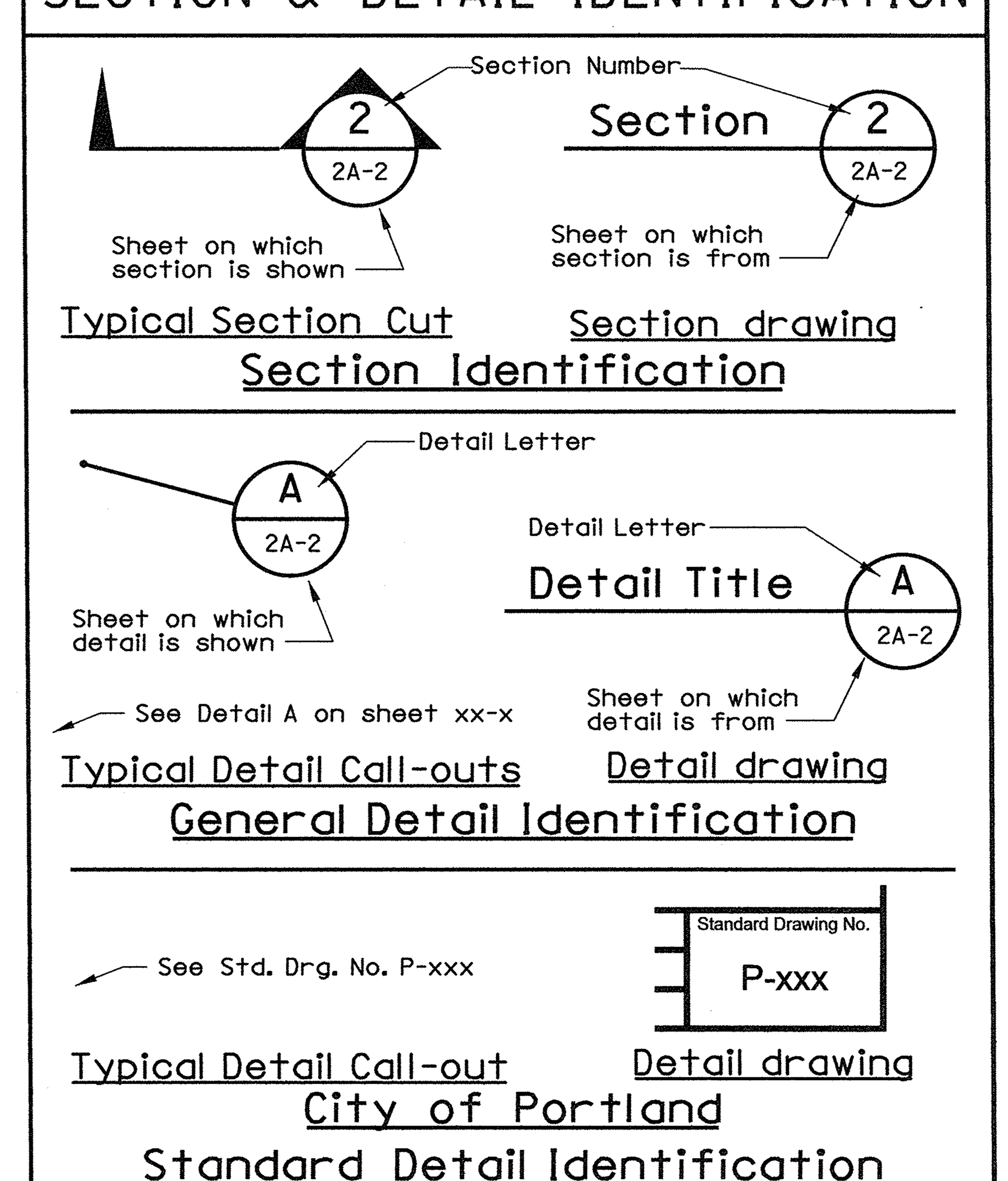

ABBREVIATIONS

AC	Asphaltic Concrete	Nom	Nominal
Ali	Alignment	Norm	Normal
Aggr	Aggregate	N	North
Appr	Approach	NE	Northeast
Approx	Approximate	NW	Northwest
Asph	Asphalt	NWE CO	Northwestern Energy
AP	As Painted	NTS	Not To Scale
ASTM	American Society of Testing Materials	No	Number
Ave	Avenue	OPS	Operations
Bkfl	Backfill	OL	Overhead Lines
BM	Bench Mark	ODOT	Oregon Department of Transportation
Bkwy	Bikeway	OF	Outfall
Bit	Bituminous	PNB	Pacific Northwest Bell Co.
BH	Bore Hole	PM	Parking Meter or Power Meter
Bott	Bottom	Pvmt	Pavement
Bdry	Boundary	Ped	Pedestrian
Br	Bridge	Perf	Perforated
Bldg	Building	Perm	Permanent
BES	Bureau of Environmental Services	Ph	Phase
BWW	Bureau of Water Works	PL	Place
CED	Curb Elevation Detail	Plt	Planter Tub
CL	Centerline or Clearance	P	Power or Signal Pole
CLSM	Concrete Low Strength Mix	PC	Point of Curvature
C-L FC	Chain-Link Fence	PCC	Portland Concrete Cement or Point Of Compound Curvature
CI	Cast Iron	PCR	Point Of Curb Return
CO	Clean Out or County	PGE	Portland General Electric
Comp	Compacted	PI	Point Of Intersection
Conc	Concrete	POVC	Point of Vertical Curve
Conn	Connection	PP	Power Pole
Const	Construct	PRC	Point of Reverse Curvature
Cont'd	Continued	PT	Point of Tangent
Cr	Creek	PT&T	Public Telephone & Telegraph
Xing	Crossing	PVC	Point of Vertical Curve or Polyvinyl Chloride
CP	Control Point	PVI	Point Of Vertical Intersection
CMP	Corrugated Metal Pipe	Lb	Pound
CSP	Corrugated Steel Pipe	PEP	Private Energy Partners
Crse	Course	Prof	Profile
CY	Cubic Yard	QC	Quarter Section Corner
Culv	Culvert	QWEST	Qwest Communications
D	Delta or Diameter	R	Radius
Dia	Diameter	RR	Railroad
Distr	Distribution	Ref	Reference
Dr	Drive or Drainage	Rebar	Reinforcing Bar, Steel
Dwy	Driveway	Reinf	Reinforce
Drg	Drawing	RCP	Reinforced Concrete Pipe
DS	Downspout	Reinst	Reinstall
Dwg	Drawing	Replace	Replacement
Esmt	Easement	Req'd	Required
E	East	Rev	Revise or Reverse
EB	Electric Box	RPT	Reference Point
Elec	Electric or Electrical	R/W	Right of Way
Elev	Elevation	RSR	Riser
Emb	Embankment	Rt	Right
Equa	Equation	Rdwy	Roadway
Exc	Excavation	RD	Roof Drain at Curb
Exist	Existing	Salv	Salvage
Ex	Extra	San	Sanitary
Exp	Exposure	Sec	Section
Ft	Feet, Foot or Font	Sed	Sedimentation
Fin	Finished	SC	Section Corner
FH	Fire Hydrant	Seg	Segment
FL	Flow Line	Swr	Sewer
FP	Flag Pole	Swk	Sidewalk
Fdtn	Foundation	S	Slope, Sewer or South
Frwy	Freeway	Sht	Sheet
FF	Fuel Filler Cap or Finished Floor	Shts	Sheets
Galv	Galvanized	Shldr	Shoulder
GAS	Gas Main	SE	Southeast
GM	Gas Meter	SW	Southwest or Sidewalk
GS	Gas Standpipe	Sq Ft	Square Feet
GV	Gas Valve	Std	Standard
Gen	General	Sta	Station
gb	Grade Break	Steam	Steam Pressurized Utility
GR	Guardrail	Stl	Steel
g	Gutter Elevation	SS	Storm Sewer
GA	Guy Anchor	SL	Street Light or Slope
GP	Guy Pole	St	Street
H	Height	Str	Structure of Strength
HDPE	High-density polyethylene	Surf	Surfacing
HMAC	Hot-Mixed Asphalt Concrete	SU	Sump
Horiz	Horizontal	T	Tangent Length or Telephone
HR	Horse Ring	TB	Telephone Booth, Telephone Box or Traffic Box
Hwy	Highway	Tel	Telephone
Incl	Include	Temp	Temporary
Inst	Install	TBM	Temporary Bench Mark
IE	Invert Elevation	TCI	Telecommunications Inc.
IR	Iron Rod	Ter	Terrace
Irrig	Irrigation	Thkn	Thickness
Jct	Junction	TC	Top of Curb, or Traffic Control
J	Junction Box	TP	Top of Pavement or Telephone Pole
K	Kelvin	TCP	Topographic Control Points or Traffic Control Plan
KM	Kilometer	Topo	Topography
Lt	Left	Tracks	Tracks, Buried Streetcar
Lv	Level	Tr	Trench
LP	Light Pole	TV	Television
Lin	Linear	Typ	Typical
Loc	Location	U	Unknown
L	Loop	UG	Underground
Lum	Luminaire	UV	Unknown Valve
MH	Manhole	UVC	Unknown Vertical Conduit
Matl	Material	Var	Varies of Variable
Med	Median	Vert	Vertical
M	Meter	W	West, Width or Water
Max	Maximum	WATER	Water Main
Mbx	Mailbox	WF	Water Faucet or Hose Bibb
Mhr	Metal Handrail	WM	Water Meter or Water Main
MHMAC	Minor Hot Mixed Asphalt Concrete	WT	Water Tower or Weight
Min	Minimum	WV	Water Valve
Mix	Mixture	Yd	Yard
Mod	Modified		
Multi	Multiple		
MWMAC	Minor Warm-Mixed Asphalt Concrete		

NO.	DATE	DESCRIPTION	APPD.
		REVISION	

DESIGNED BY: R. Webb | DATE APPROVED: Apr. 2013
CAD BY: D. Ramer, C. Shearer | DIV. ENGINEER: S. Townsen | PROJECT NO.: T00121
CHECKED BY: E. Huntsinger | 1/4 SECTION: 2836,2936,3036, 3136,3236,3336, 3436,3536,3636
PROJECT NUMBER: STP-5900(246)

REGISTERED PROFESSIONAL ENGINEER 84470PE OREGON SEPTEMBER 14, 2010 EVA B. HUNTSINGER
Expires 6/30/13

APPROVALS:
SUPERVISING ENGINEER — REG. PROF. ENGR. NO. 14956PE
CITY ENGINEER — REG. PROF. ENGR. NO. 51538PE

CITY OF PORTLAND BUREAU OF TRANSPORTATION
CHARLIE HALES — MAYOR
STEVE TOWNSEN, P.E. — CITY ENGINEER

CITY OF PORTLAND, OREGON 1851

NE/SE 50s Bikeway: NE Thompson to SE Woodstock

MULTNOMAH COUNTY

Symbols and Abbreviations

SHEET NO. 1B

Plot Date: 4/2/2013 8:06:55 AM Filename: S:_II_Design\T00121 - 50's Bikeway Woodstock Blvd-Thompson St, SE-NE\CAD\PLAN_SHEETS\SHT 0IB SYMBOLS AND ABBREVIATIONS\PLOT_SHT_0IB.dgn

Bid Documents

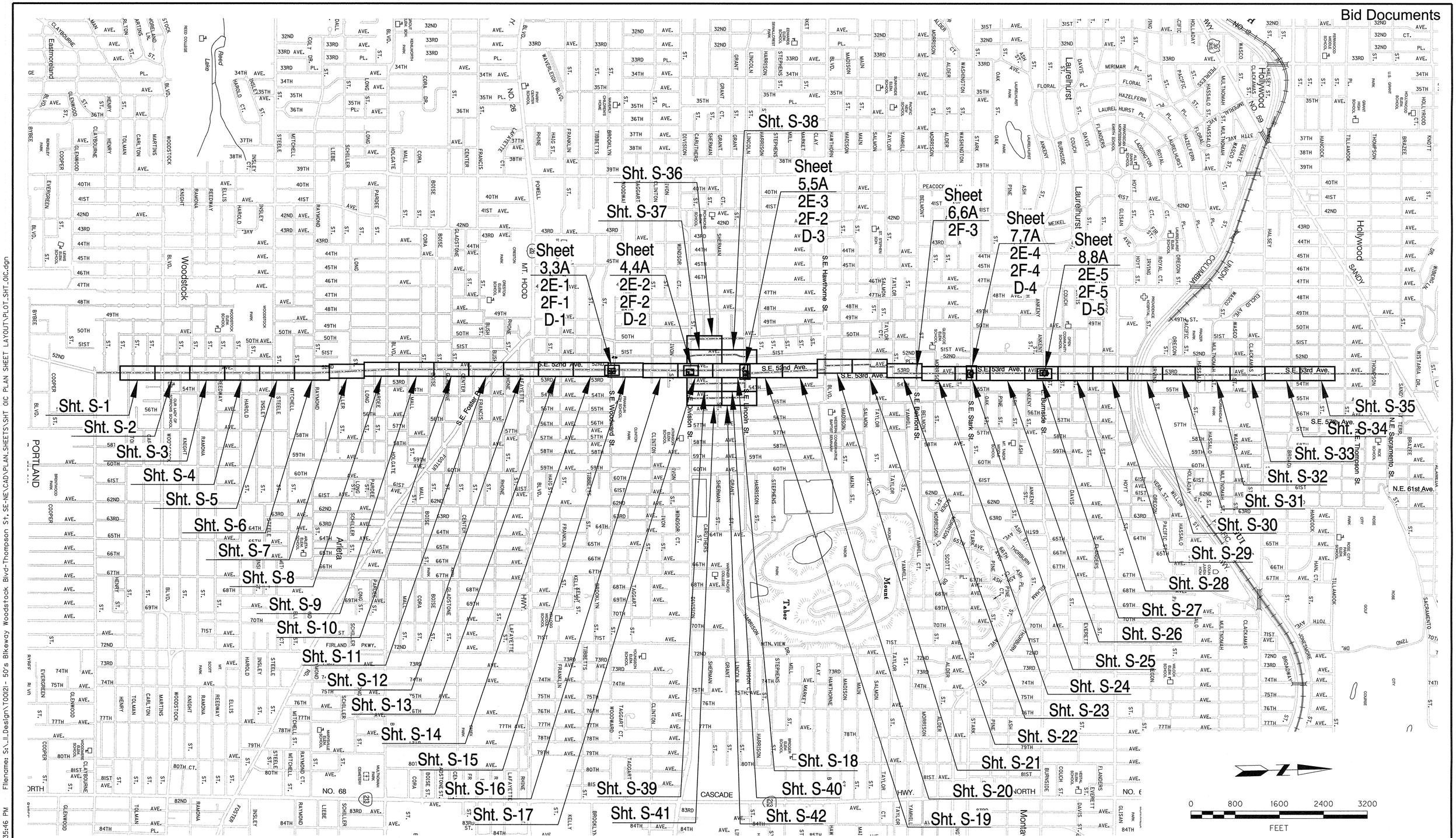

NO.	DATE	DESCRIPTION	APPD.

REVISION

DESIGNED BY R. Webb	DATE APPROVED Apr. 2013	
CAD BY D. Ramer C. Shearer	DIV. ENGINEER S. Townsen	PROJECT NO. T00121
CHECKED BY E. Huntsinger		T.L. SECTION 2836,2936,3036 3136,3236,3336 3436,3536,3636
PROJECT NUMBER STP-5900(246)		

REGISTERED PROFESSIONAL ENGINEER 84476PE OREGON SEPTEMBER 14, 2010 EVA B. HUNTSINGER

Expires 6/30/13

APPROVALS:

SUPERVISING ENGINEER — REG. PROF. ENGR. NO. 14956PE

CITY ENGINEER — REG. PROF. ENGR. NO. 51538PE

CITY OF PORTLAND BUREAU OF TRANSPORTATION

CHARLIE HALES, MAYOR
STEVE TOWNSEN, P.E., CITY ENGINEER

NE/SE 50s Bikeway: NE Thompson to SE Woodstock

MULTNOMAH COUNTY

Sheet Layout Plan

SHEET NO. 1C

Plot Date: 4/1/2013 1:35:46 PM Filename: St_IL_Design\T00121-50's Bikeway Woodstock Blvd-Thompson St, SE-NE\CAD\PLAN_SHEETS\SHT OIC PLAN SHEET LAYOUT\PLOT_SHT_OIC.dgn

Bid Documents

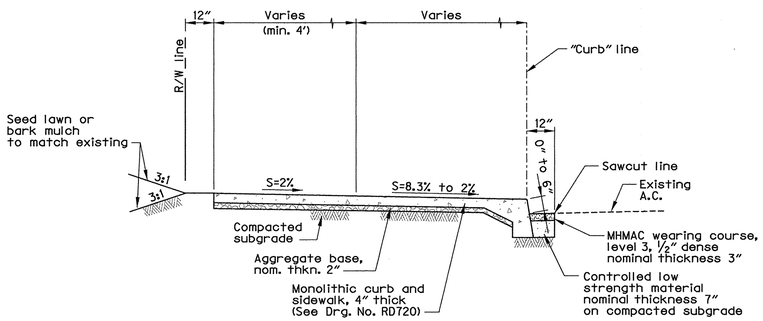

Section

Monolithic Curb and Sidewalk (A / 3,4,5,6,7)

Scale: ⅜″ = 1′-0″

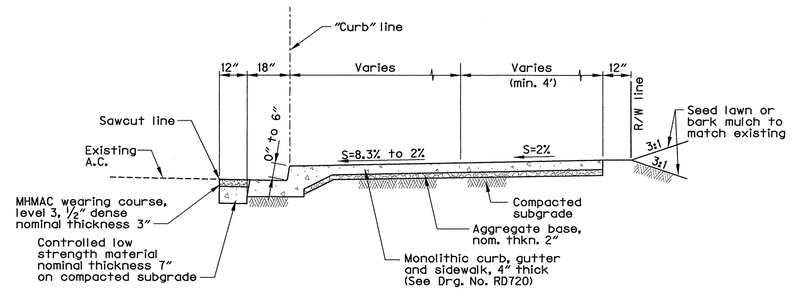

Section

Monolithic Curb Gutter and Sidewalk (Rt.) (B / 3)

Scale: ⅜″ = 1′-0″

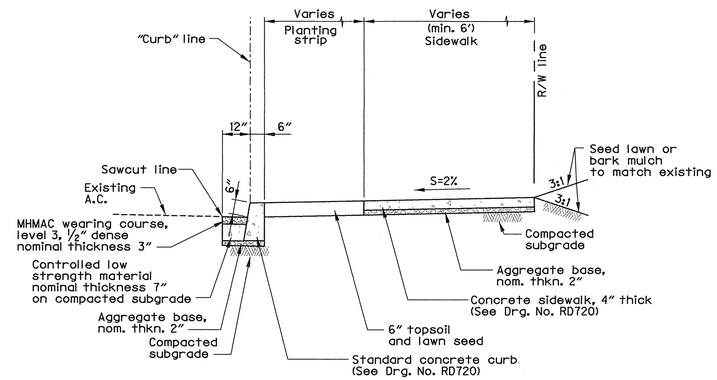

Section

Standard Curb and Separated Sidewalk (C / 3,4,5,6)

Scale: ⅜″ = 1′-0″

WARNING
0 ½ 1
IF THIS BAR DOES NOT MEASURE 1" THEN DRAWING IS NOT TO SCALE.

NO.	DATE	DESCRIPTION	APPD.

REVISION

DESIGNED BY R. Webb	DATE APPROVED Apr. 2013	
CAD BY D. Ramer C. Shearer	DIV. ENGINEER S. Townsen	PROJECT NO. T00121
CHECKED BY E. Huntsinger		T/A SECTION 2836,2936,3036 3136,3236,3336 3436,3536,3636
PROJECT NUMBER STP-5900(246)		

REGISTERED PROFESSIONAL ENGINEER 84470PE OREGON SEPTEMBER 14, 2010 EVA B. HUNTSINGER
Expires 6/30/13

APPROVALS:

SUPERVISING ENGINEER — REG. PROF. ENGR. NO. 14956PE

CITY ENGINEER — REG. PROF. ENGR. NO. 51538PE

CITY OF PORTLAND BUREAU OF TRANSPORTATION

CHARLIE HALES, MAYOR
STEVE TOWNSEN, P.E., CITY ENGINEER

NE/SE 50s Bikeway: NE Thompson to SE Woodstock

MULTNOMAH COUNTY

Construction Details

SHEET NO. 2B

Plot Date: 4/1/2013 1:35:49 PM Filename: S:_IL_Design\T00121 - 50's Bikeway Woodstock Blvd-Thompson St, SE-NE\CAD\PLAN_SHEETS\SHT 02B-01 CONSTRUCTION DETAILS\PLOT_SHT_02B-01.dgn

Bid Documents

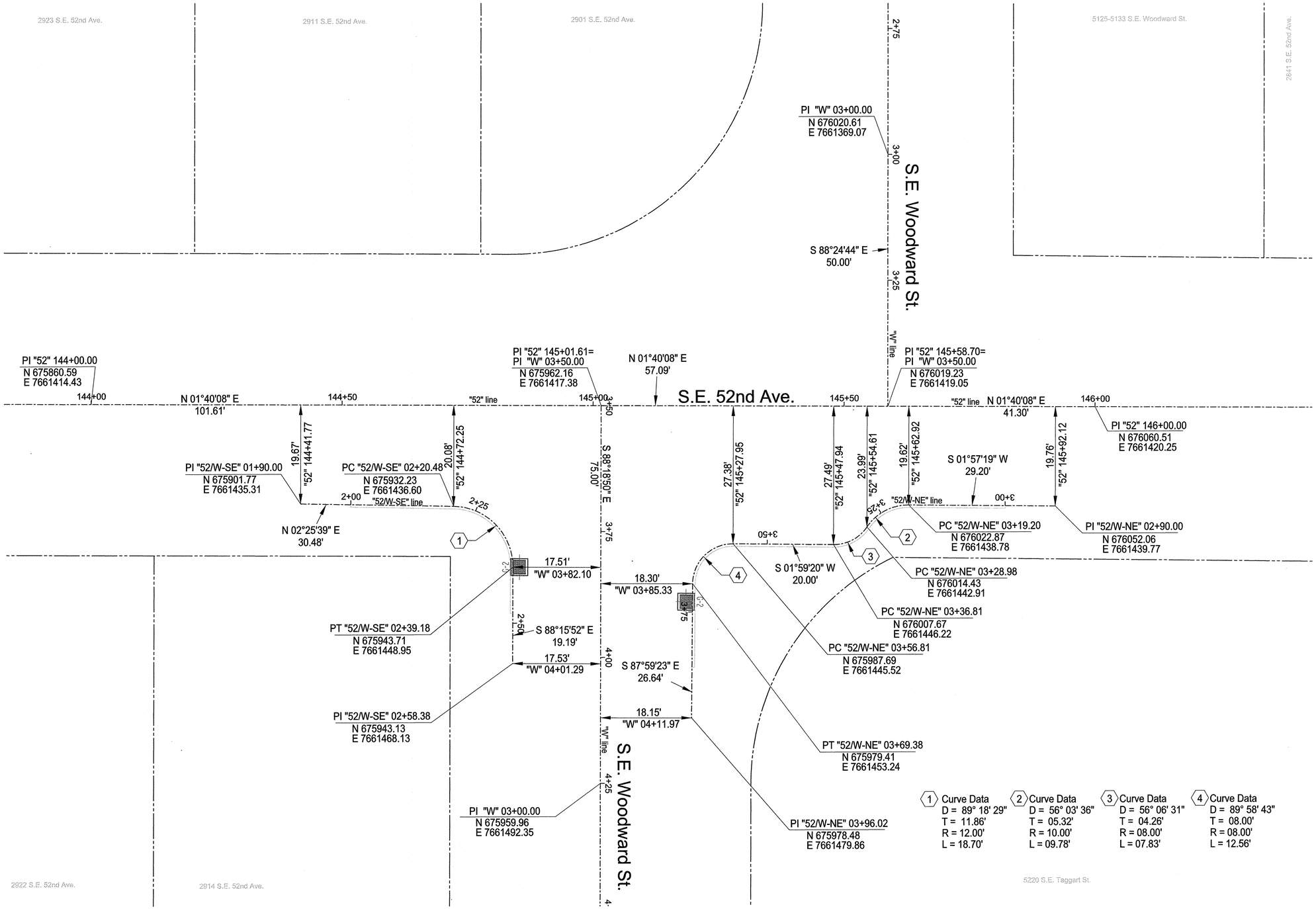

NO.	DATE	DESCRIPTION	APPD.

REVISION

DESIGNED BY R. Webb	DATE APPROVED Apr. 2013	
CAD BY D. Ramer C. Shearer	DIV. ENGINEER S. Townsen	PROJECT NO. T00121
CHECKED BY E. Huntsinger		1/4 SECTION 2836,2936,3036 3136,3236,3336 3436,3536,3636
PROJECT NUMBER STP-5900(246)		

REGISTERED PROFESSIONAL ENGINEER 84470PE OREGON SEPTEMBER 14, 2010 EVA B. HUNTSINGER
Expires 6/30/13

APPROVALS:
SUPERVISING ENGINEER — REG. PROF. ENGR. NO. 14956PE
CITY ENGINEER — REG. PROF. ENGR. NO. 51538PE

CITY OF PORTLAND BUREAU OF TRANSPORTATION
CHARLIE HALES, MAYOR
STEVE TOWNSEN, P.E., CITY ENGINEER

CITY OF PORTLAND OREGON 1851

NE/SE 50s Bikeway: NE Thompson to SE Woodstock
MULTNOMAH COUNTY

Horizontal Alignment Plan
S.E. 52nd Ave. at
S.E. Woodward St.

SHEET NO. 2E-1

Plot Date: 4/1/2013 1:35:53 PM Filename: S:_JL_Design\T00121 - 50's Bikeway Woodstock Blvd-Thompson St, SE-NE\CAD\PLAN_SHEETS\SHT 02E-01HORIZONTAL ALIGNMENT PLAN\PLOT_SHT_02E-01.dgn

Bid Documents

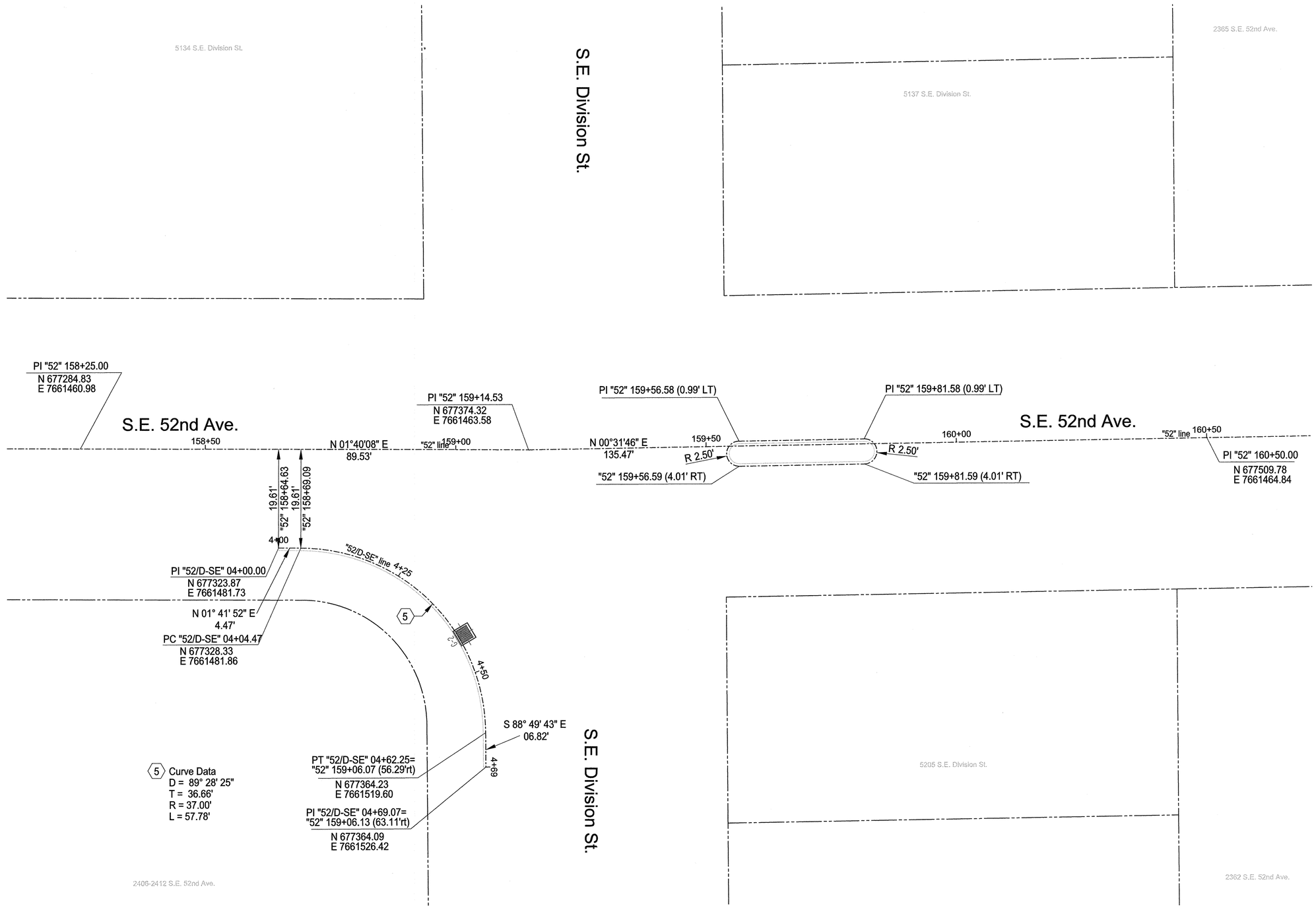

Plot Date: 4/1/2013 1:35:54 PM Filename: S:_IL_Design\T00121 - 50's Bikeway Woodstock Blvd-Thompson St, SE-NE\CAD\PLAN_SHEETS\SHT 02E-02 HORIZONTAL ALIGNMENT PLAN\PLOT_SHT_02E-02.dgn

NO.	DATE	DESCRIPTION	APPD.

REVISION

DESIGNED BY R. Webb	DATE APPROVED Apr. 2013	
CAD BY D. Ramer C. Shearer	DIV. ENGINEER S. Townsen	PROJECT NO. T00121
CHECKED BY E. Huntsinger		T/A SECTION 2836,2936,3036 3136,3236,3336 3436,3536,3636
PROJECT NUMBER STP-5900(246)		

REGISTERED PROFESSIONAL ENGINEER 84470PE OREGON SEPTEMBER 14, 2010 EVA B. HUNTSINGER
Expires 6/30/13

APPROVALS:

SUPERVISING ENGINEER — REG. PROF. ENGR. NO. 14956PE

CITY ENGINEER — REG. PROF. ENGR. NO. 51538PE

CITY OF PORTLAND BUREAU OF TRANSPORTATION

CHARLIE HALES, MAYOR
STEVE TOWNSEN, P.E., CITY ENGINEER

CITY OF PORTLAND OREGON 1851

NE/SE 50s Bikeway: NE Thompson to SE Woodstock

MULTNOMAH COUNTY

Horizontal Alignment Plan
S.E. 52nd Ave. at
S.E. Division St.

SHEET NO. 2E-2

Bid Documents

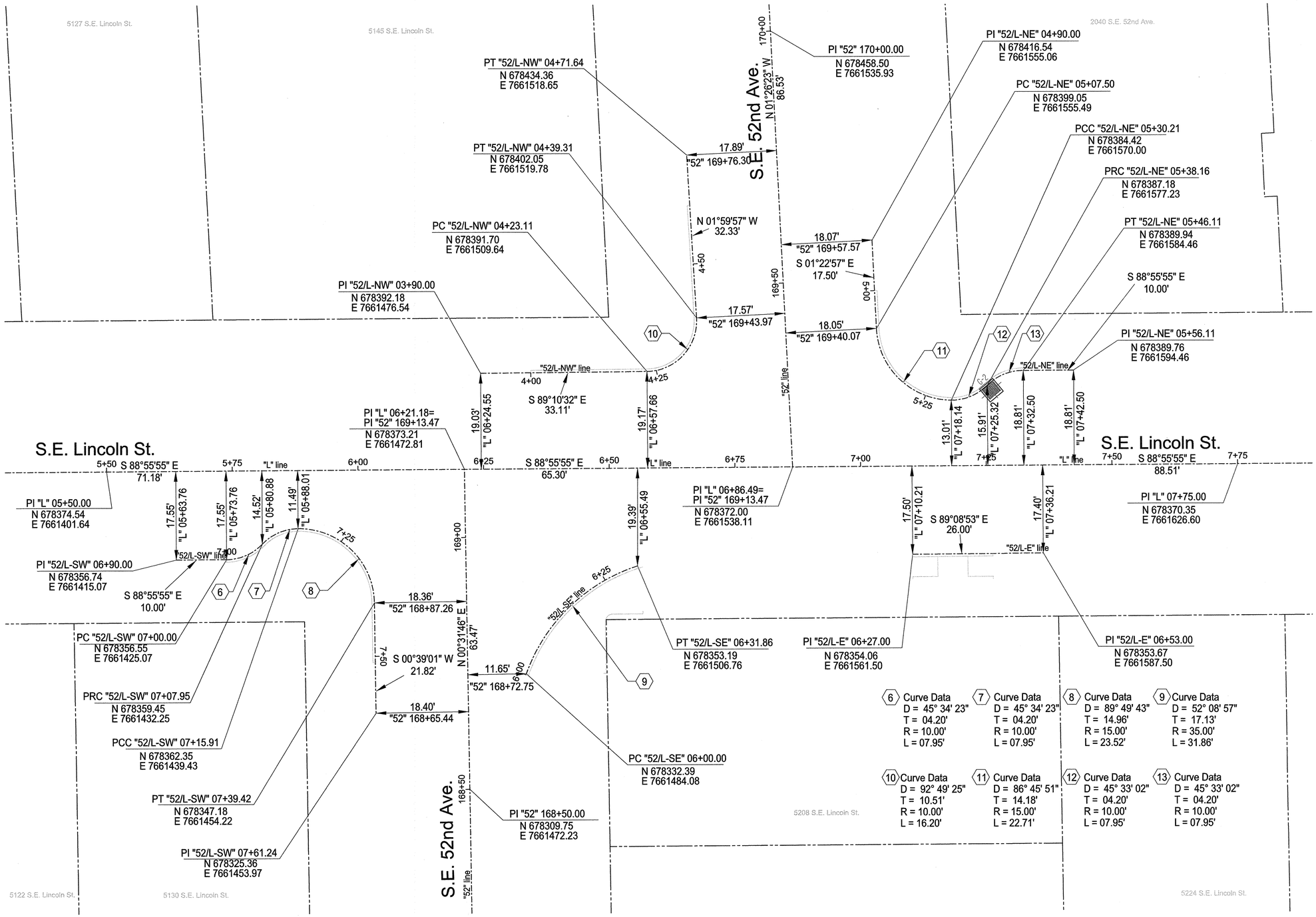

Plot Date: 4/1/2013 1:35:55 PM Filename: S:_ll_Design\T00121 - 50's Bikeway Woodstock Blvd-Thompson St, SE-NE\CAD\PLAN_SHEETS\SHT 02E-03 HORIZONTAL ALIGNMENT PLAN\PLOT_SHT_02E-03.dgn

NO.	DATE	DESCRIPTION	APPD.
		REVISION	

DESIGNED BY R. Webb	DATE APPROVED Apr. 2013
CAD BY D. Ramer C. Shearer	DIV. ENGINEER S. Townsen
PROJECT NO. T00121	
CHECKED BY E. Huntsinger	1/4 SECTION 2836,2936,3036 3136,3236,3336 3436,3536,3636
PROJECT NUMBER STP-5900(246)	

REGISTERED PROFESSIONAL ENGINEER 84470PE OREGON SEPTEMBER 14, 2010 EVA B. HUNTSINGER
Expires 6/30/13

APPROVALS:
SUPERVISING ENGINEER — REG. PROF. ENGR. NO. 14956PE
CITY ENGINEER — REG. PROF. ENGR. NO. 51538PE

CITY OF PORTLAND BUREAU OF TRANSPORTATION
CHARLIE HALES — MAYOR
STEVE TOWNSEN, P.E. — CITY ENGINEER

CITY OF PORTLAND, OREGON 1851

NE/SE 50s Bikeway: NE Thompson to SE Woodstock
MULTNOMAH COUNTY

Horizontal Alignment Plan
S.E. 52nd Ave. at
S.E. Lincoln St.

SHEET NO. 2E-3

Bid Documents

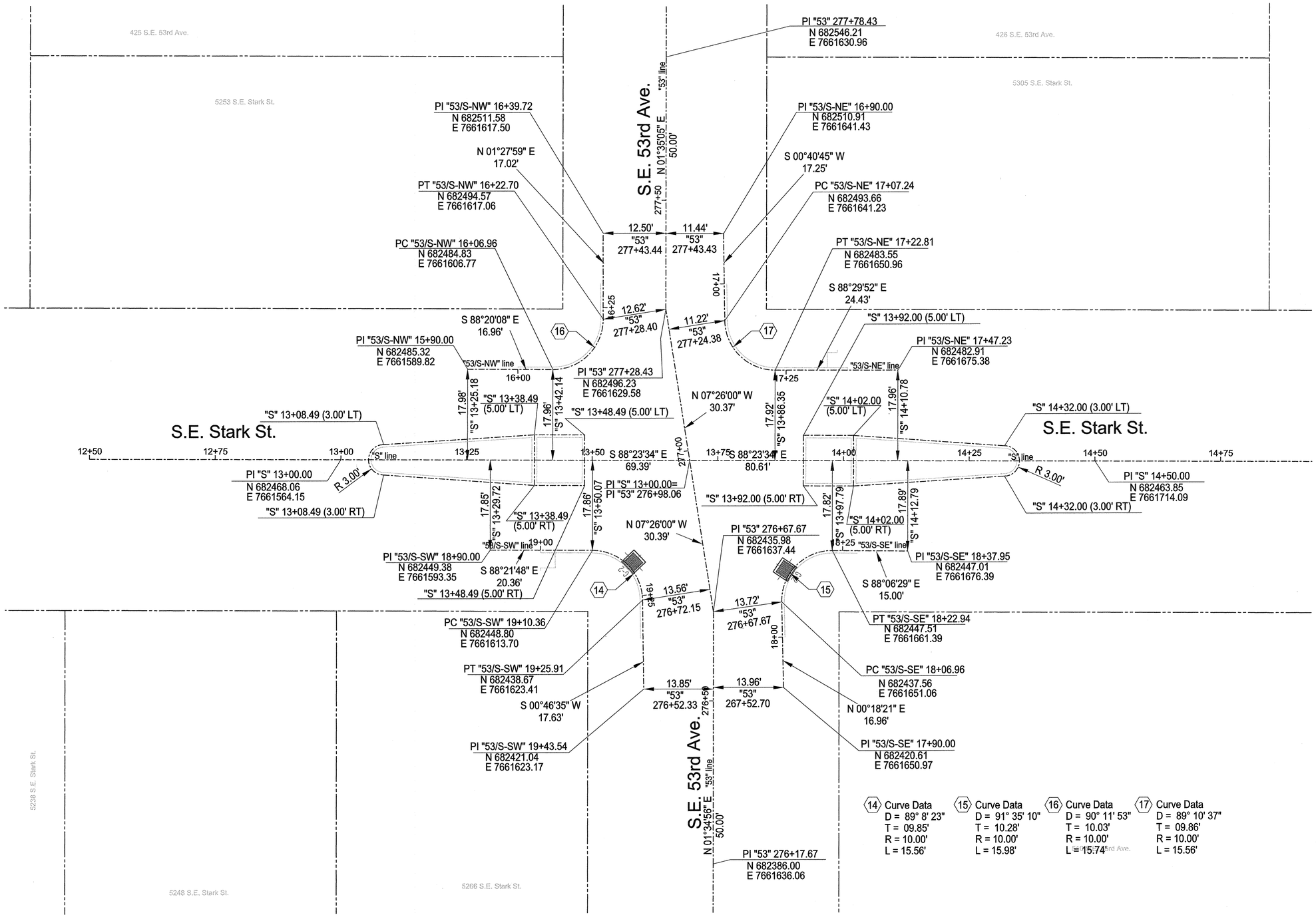

Plot Date: 4/1/2013 1:35:57 PM Filename: S:_JL_Design\T00121- 50's Bikeway Woodstock Blvd-Thompson St, SE-NE\CAD\PLAN_SHEETS\SHT 02E-04 HORIZONTAL ALIGNMENT PLAN\PLOT_SHT_02E-04.dgn

NO.	DATE	DESCRIPTION	APPD.
		REVISION	

DESIGNED BY R. Webb	DATE APPROVED Apr. 2013	
CAD BY D. Ramer C. Shearer	DIV. ENGINEER S. Townsen	PROJECT NO. T00121
CHECKED BY E. Huntsinger		1/4 SECTION 2836,2936,3036 3136,3236,3336 3436,3536,3636
PROJECT NUMBER STP-5900(246)		

REGISTERED PROFESSIONAL ENGINEER 84470PE OREGON SEPTEMBER 14, 2010 EVA B. HUNTSINGER
Expires 6/30/13

APPROVALS:

SUPERVISING ENGINEER — REG. PROF. ENGR. NO. 14956PE

CITY ENGINEER — REG. PROF. ENGR. NO. 51538PE

CITY OF PORTLAND BUREAU OF TRANSPORTATION

CHARLIE HALES — MAYOR
STEVE TOWNSEN, P.E. — CITY ENGINEER

CITY OF PORTLAND OREGON 1851

NE/SE 50s Bikeway: NE Thompson to SE Woodstock

MULTNOMAH COUNTY

Horizontal Alignment Plan
S.E. 53rd Ave. at
S.E. Stark St. St.

SHEET NO. 2E-4

Bid Documents

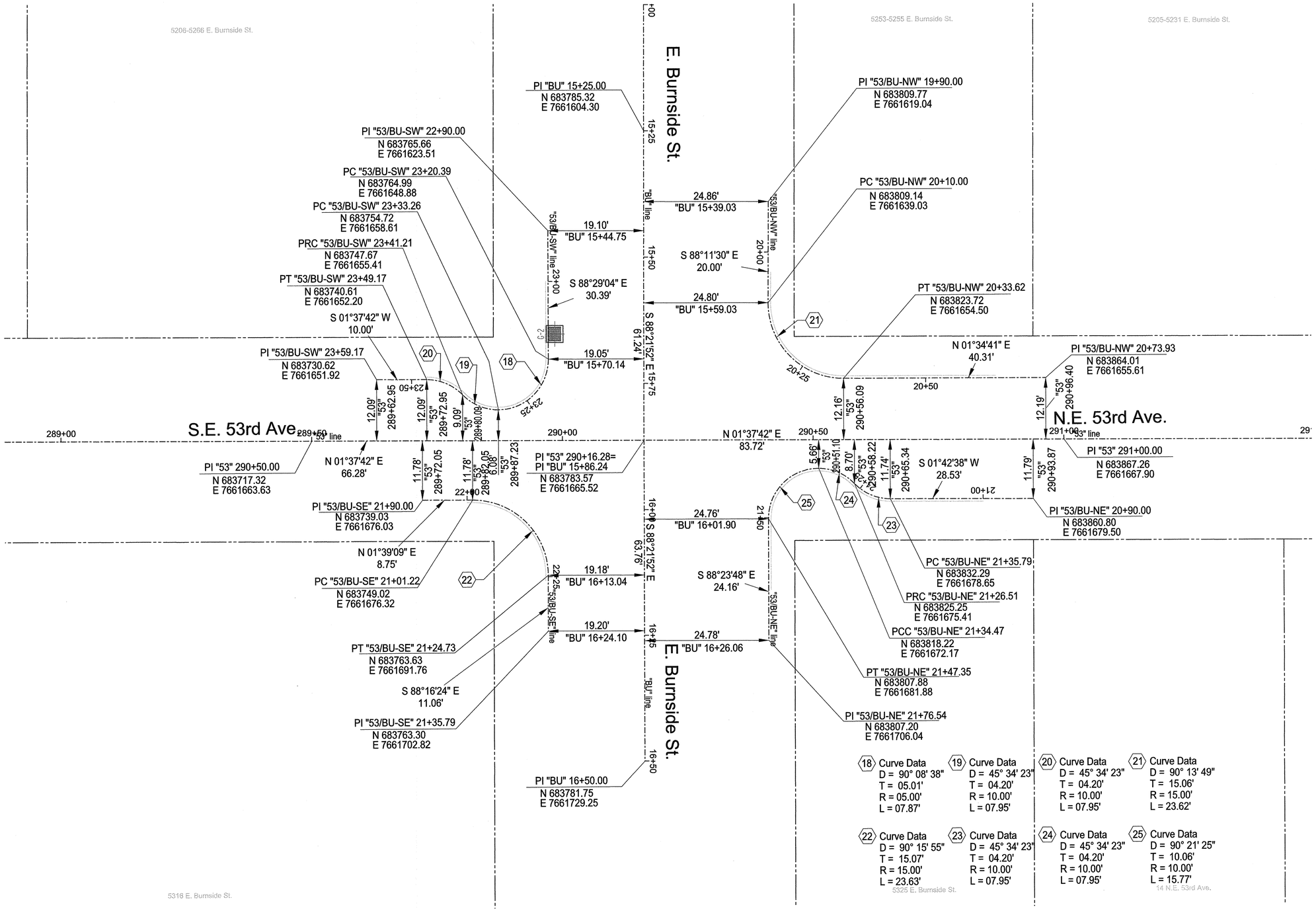

NO.	DATE	DESCRIPTION	APPD.

REVISION

DESIGNED BY R. Webb	DATE APPROVED Apr. 2013	
CAD BY D. Ramer C. Shearer	DIV. ENGINEER S. Townsen	PROJECT NO. T00121
CHECKED BY E. Huntsinger		1/4 SECTION 2836,2936,3036 3136,3236,3336 3436,3536,3636
PROJECT NUMBER STP-5900(246)		

REGISTERED PROFESSIONAL ENGINEER 84070PE OREGON DECEMBER 14, 2005 EVA B. HUNTSINGER
Expires 6/30/13

APPROVALS:
SUPERVISING ENGINEER — REG. PROF. ENGR. NO. 14956PE
CITY ENGINEER — REG. PROF. ENGR. NO. 51538PE

CITY OF PORTLAND BUREAU OF TRANSPORTATION
CHARLIE HALES, MAYOR
STEVE TOWNSEN, P.E., CITY ENGINEER

CITY OF PORTLAND, OREGON 1851

NE/SE 50s Bikeway: NE Thompson to SE Woodstock
MULTNOMAH COUNTY

Horizontal Alignment Plan
S.E. 53rd Ave. at
E. Burnside St.

SHEET NO. 2E-5

Plot Date: 4/1/2013 1:35:58 PM Filename: S:_IL_Design\T00121- 50's Bikeway Woodstock Blvd-Thompson St, SE-NE\CAD\PLAN_SHEETS\SHT 02E-05 HORIZONTAL ALIGNMENT PLAN\PLOT_SHT_02E-05.dgn

Bid Documents

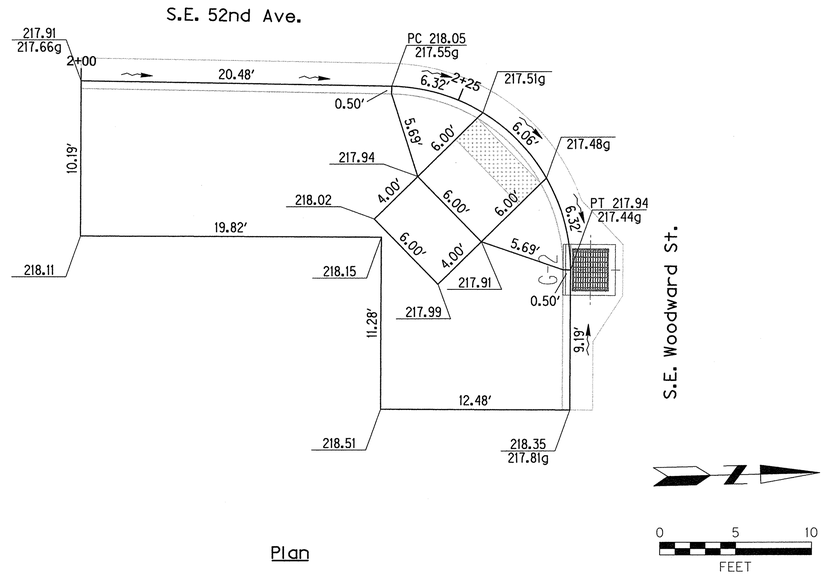

Plan

S.E. 52nd Ave. at S.E. Woodward St.
S.E. Corner

Scale: 1" = 5'

A / 3

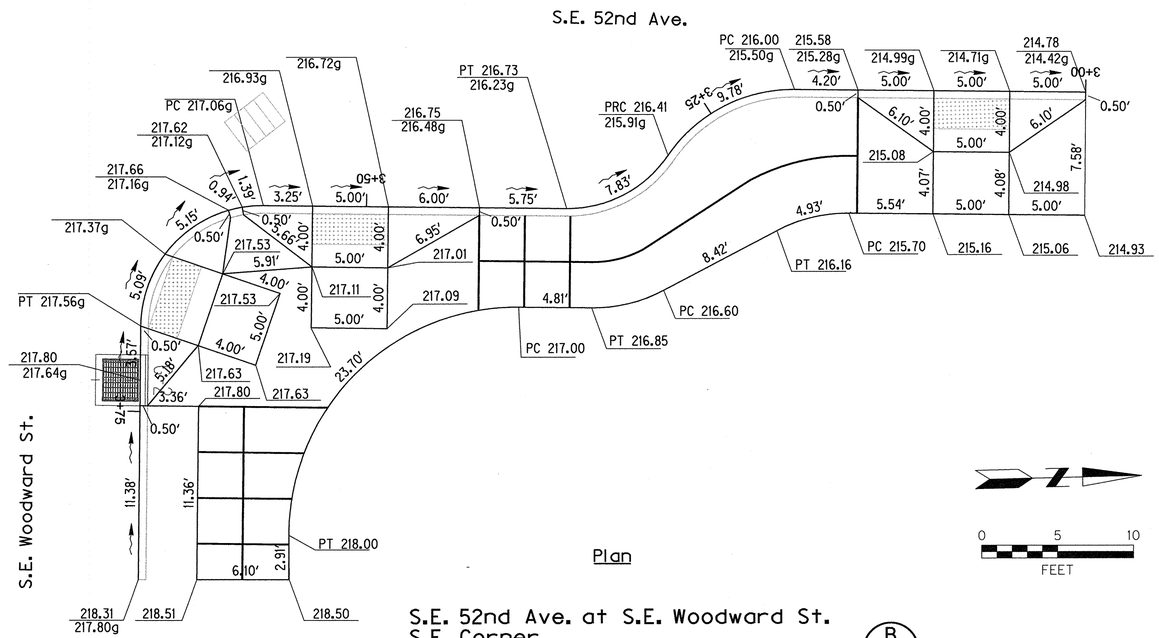

Plan

S.E. 52nd Ave. at S.E. Woodward St.
S.E. Corner

Scale: 1" = 5'

B / 3

NO.	DATE	DESCRIPTION	APPD.
		REVISION	

DESIGNED BY R. Webb	DATE APPROVED Apr. 2013	
CAD BY D. Ramer C. Shearer	DIV. ENGINEER S. Townsen	PROJECT NO. T00121
CHECKED BY E. Huntsinger		1/4 SECTION 2836,2936,3036 3136,3236,3336 3436,3536,3636
PROJECT NUMBER STP-5900(246)		

REGISTERED PROFESSIONAL ENGINEER 84470PE OREGON SEPTEMBER 14, 2001 EVA B. HUNTSINGER
Expires 6/30/13

APPROVALS:

SUPERVISING ENGINEER — REG. PROF. ENGR. NO. 14956PE

CITY ENGINEER — REG. PROF. ENGR. NO. 51538PE

CITY OF PORTLAND BUREAU OF TRANSPORTATION

CHARLIE HALES, MAYOR
STEVE TOWNSEN, P.E., CITY ENGINEER

CITY OF PORTLAND OREGON 1851

NE/SE 50s Bikeway: NE Thompson to SE Woodstock

MULTNOMAH COUNTY

Elevation Detail Plans

SHEET NO. 2F-1

Plot Date: 4/1/2013 1:35:59 PM Filename: S:_IL Design\T00121- 50's Bikeway Woodstock Blvd-Thompson St. SE-NE\CAD\PLAN_SHEETS\SHT 02F-01ELEVATION DETAIL PLAN\PLOT_SHT_2F-01.dgn

Bid Documents

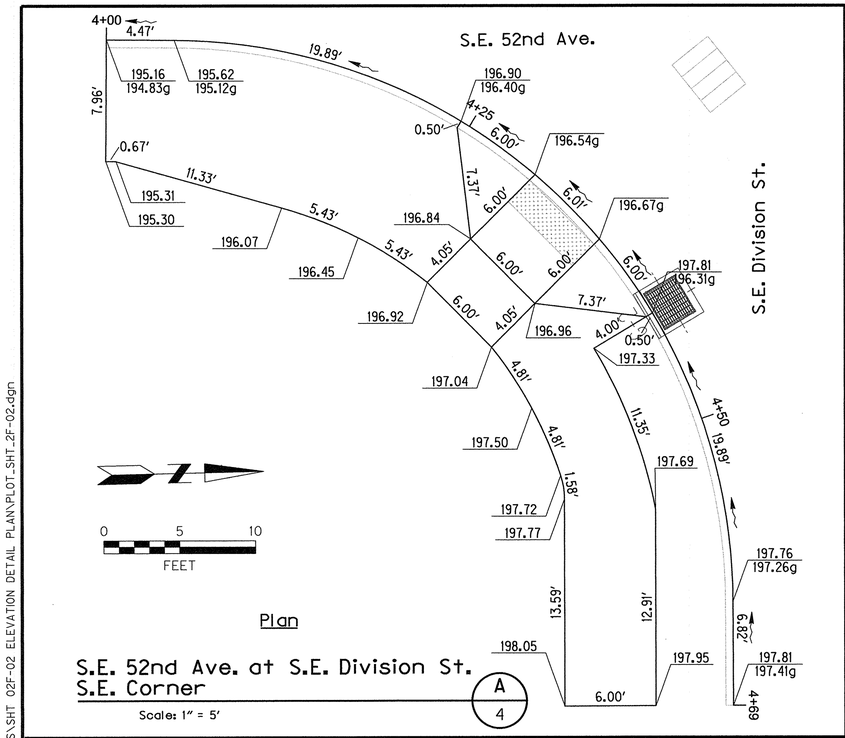

S.E. 52nd Ave. at S.E. Division St.
S.E. Corner

Scale: 1" = 5'

A / 4

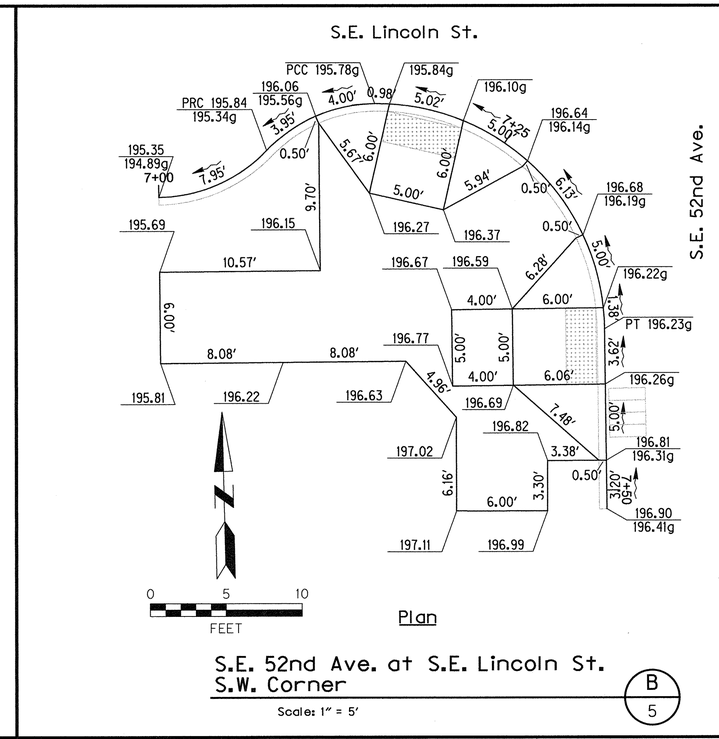

S.E. 52nd Ave. at S.E. Lincoln St.
S.W. Corner

Scale: 1" = 5'

B / 5

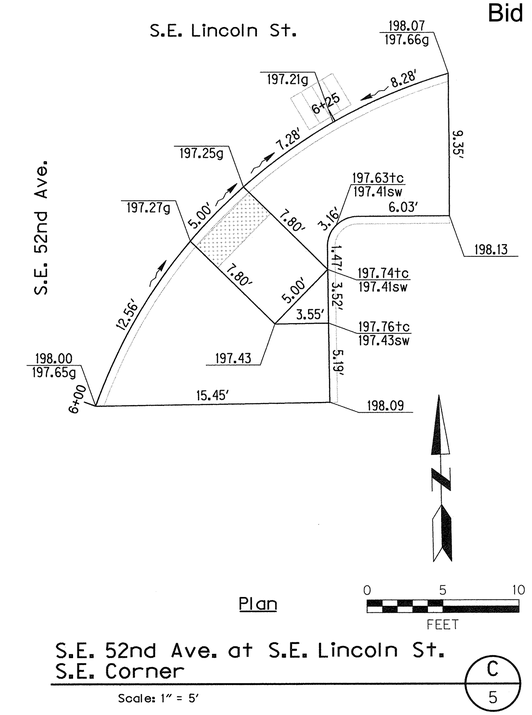

S.E. 52nd Ave. at S.E. Lincoln St.
S.E. Corner

Scale: 1" = 5'

C / 5

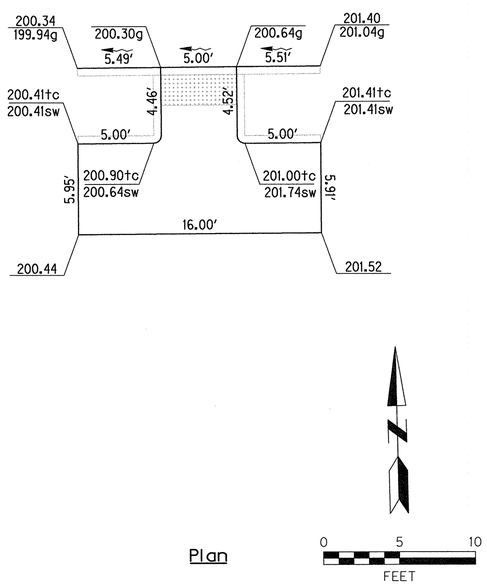

S.E. Lincoln St. at Sta. 7+20
South side of street

Scale: 1" = 5'

D / 5

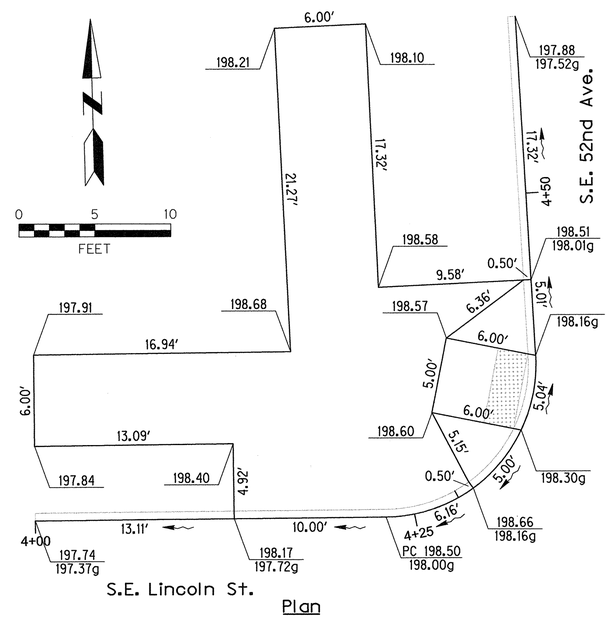

S.E. 52nd Ave. at S.E. Lincoln St.
N.W. Corner

Scale: 1" = 5'

E / 5

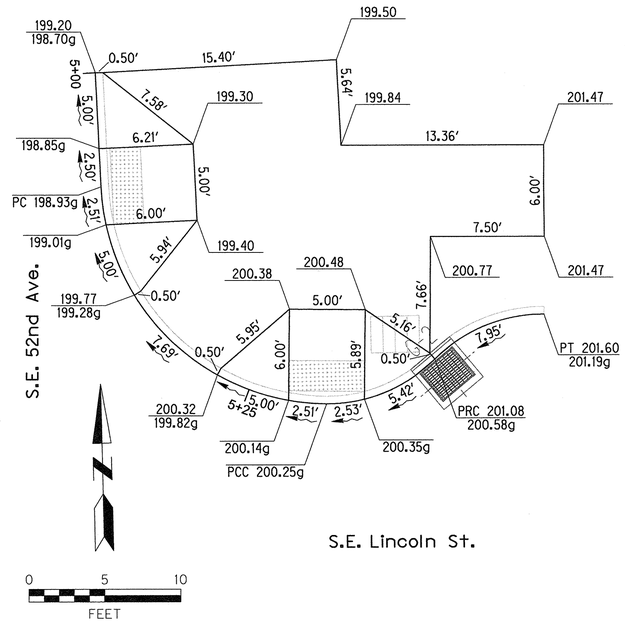

S.E. 52nd Ave. at S.E. Lincoln St.
N.E. Corner

Scale: 1" = 5'

F / 5

NO.	DATE	DESCRIPTION	APPD.

REVISION

DESIGNED BY R. Webb	DATE APPROVED Apr. 2013	
CAD BY D. Ramer C. Shearer	DIV. ENGINEER S. Townsen	PROJECT NO. T00121
CHECKED BY E. Huntsinger		1/4 SECTION 2836,2936,3036 3136,3236,3336 3436,3536,3636
PROJECT NUMBER STP-5900(246)		

REGISTERED PROFESSIONAL ENGINEER 84470PE OREGON SEPTEMBER 14, 2001 EVA B. HUNTSINGER

Expires 6/30/13

APPROVALS:

SUPERVISING ENGINEER — REG. PROF. ENGR. NO. 14956PE

CITY ENGINEER — REG. PROF. ENGR. NO. 51538PE

CITY OF PORTLAND BUREAU OF TRANSPORTATION

CHARLIE HALES, MAYOR
STEVE TOWNSEN, P.E., CITY ENGINEER

CITY OF PORTLAND OREGON 1851

NE/SE 50s Bikeway: NE Thompson to SE Woodstock

MULTNOMAH COUNTY

Elevation Detail Plans

SHEET NO. 2F-2

Plot Date: 4/1/2013 1:36:01 PM Filename: S:_IL_Design\T00121- 50's Bikeway Woodstock Blvd-Thompson St, SE-NE\CAD\PLAN\SHEETS\SHT 02F-02 ELEVATION DETAIL PLAN\PLOT_SHT_2F-02.dgn

Bid Documents

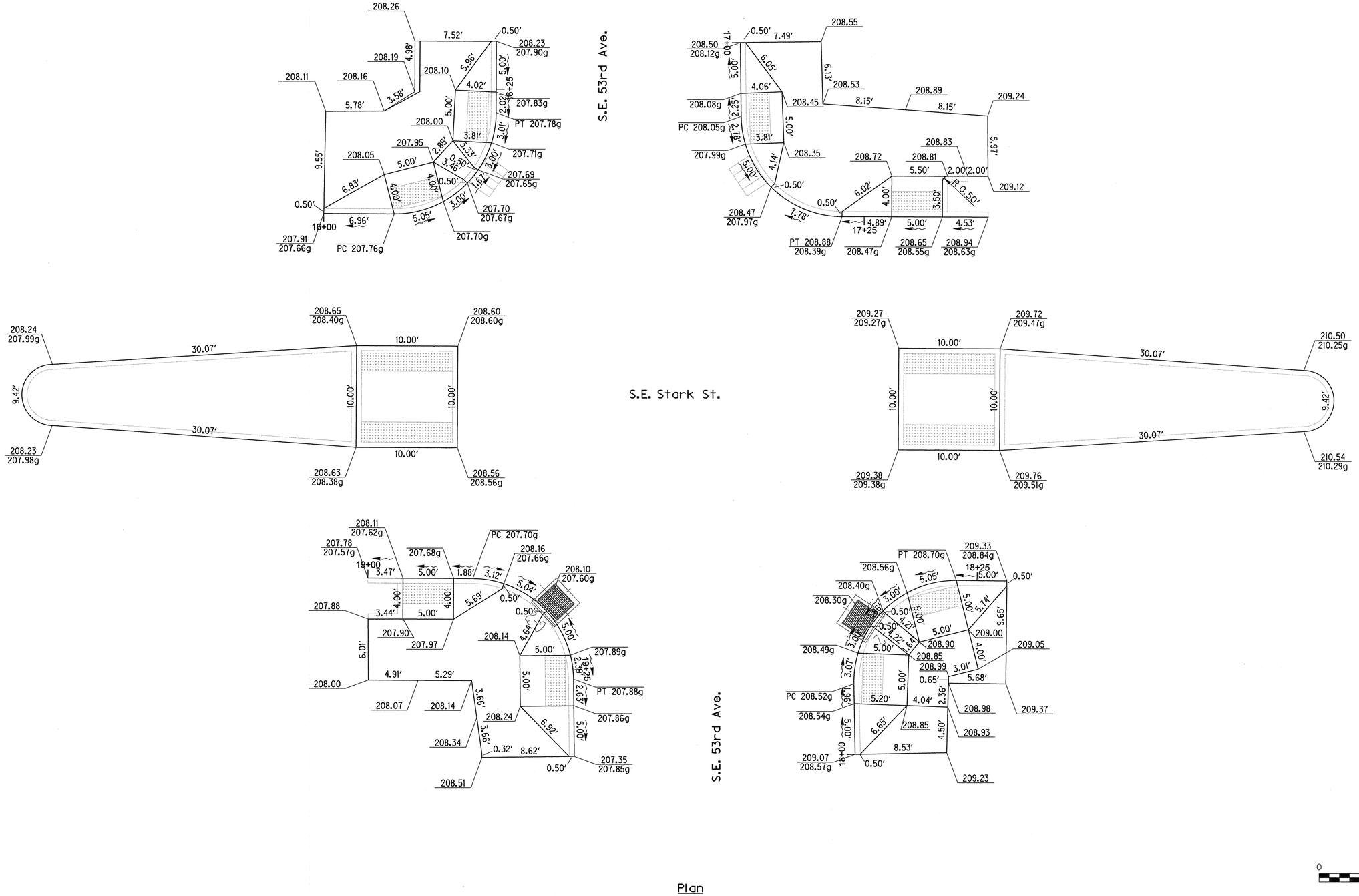

S.E. 53rd Ave. at S.E. Stark St.

Scale: 1" = 5'

A
6

NO.	DATE	DESCRIPTION	APPD.

REVISION

DESIGNED BY	DATE APPROVED	
R. Webb	Apr. 2013	
CAD BY: D. Ramer, C. Shearer	DIV. ENGINEER: S. Townsen	PROJECT NO. T00121
CHECKED BY: E. Huntsinger		1/4 SECTION: 2836,2936,3036, 3136,3236,3336, 3436,3536,3636
PROJECT NUMBER: STP-5900(246)		

REGISTERED PROFESSIONAL ENGINEER 84470PE OREGON SEPTEMBER 14, 2010 EVA B. HUNTSINGER

Expires 6/30/13

APPROVALS:

SUPERVISING ENGINEER — REG. PROF. ENGR. NO. 14956PE

CITY ENGINEER — REG. PROF. ENGR. NO. 51538PE

CITY OF PORTLAND BUREAU OF TRANSPORTATION

CHARLIE HALES, MAYOR
STEVE TOWNSEN, P.E., CITY ENGINEER

CITY OF PORTLAND, OREGON 1851

NE/SE 50s Bikeway: NE Thompson to SE Woodstock

MULTNOMAH COUNTY

Elevation Detail Plans

SHEET NO. 2F-3

Plot Date: 4/1/2013 1:36:02 PM Filename: S:_IL_Design\T00121- 50's Bikeway Woodstock Blvd-Thompson St, SE-NE\CAD\PLAN_SHEETS\SHT 02F-03 ELEVATION DETAIL PLAN\PLOT_SHT_2F-03.dgn

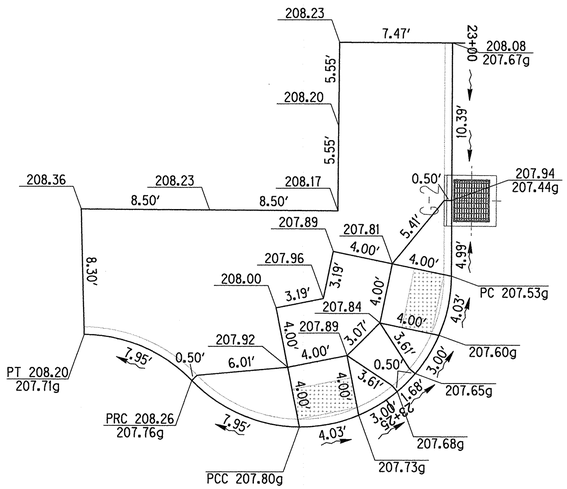

S.E. 53rd Ave.

E. Burnside St.

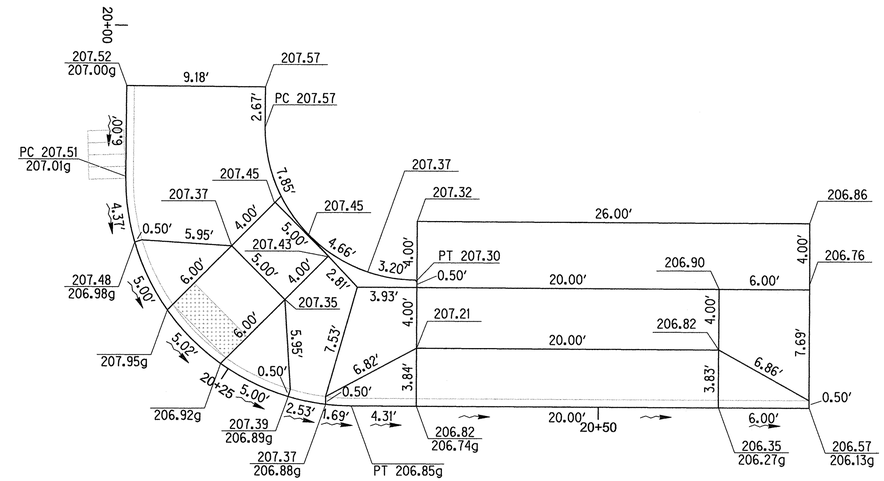

S.E. 53rd Ave.

E. Burnside St.

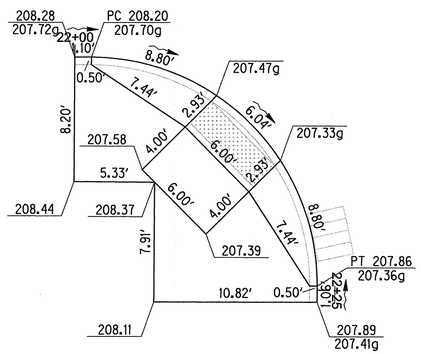

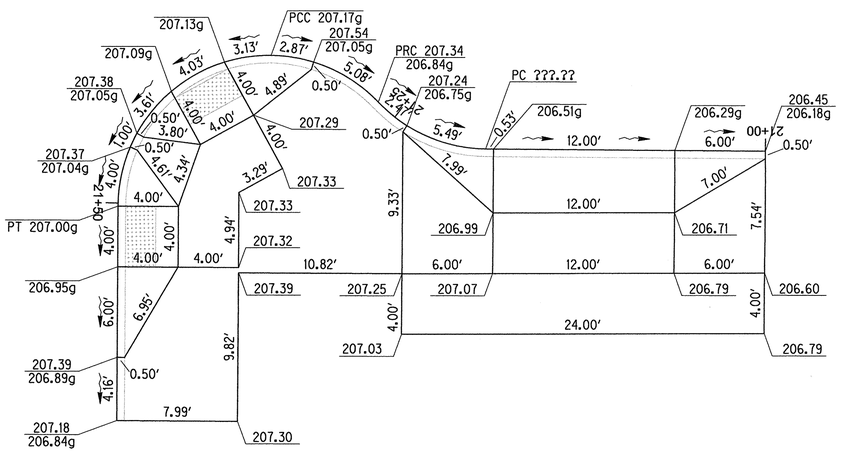

E. Burnside St.

Plan

0 5 10
FEET

S.E. 53rd Ave. at E. Burnside St. (A / 7)

Scale: 1" = 5'

Plot Date: 4/1/2013 1:36:04 PM Filename: S:_II_Design\T00121 - 50's Bikeway Woodstock Blvd-Thompson St, SE-NE\CAD\PLAN_SHEETS\SHT 02F-04 ELEVATION DETAIL PLAN\PLOT_SHT_2F-04.dgn

NO.	DATE	DESCRIPTION	APPD.

REVISION

DESIGNED BY R. Webb	DATE APPROVED Apr. 2013	
CAD BY D. Ramer C. Shearer	DIV. ENGINEER S. Townsen	PROJECT NO. T00121
CHECKED BY E. Huntsinger		1/4 SECTION 2836,2936,3036 3136,3236,3336 3436,3536,3636
PROJECT NUMBER STP-5900(246)		

REGISTERED PROFESSIONAL ENGINEER 84470PE OREGON SEPTEMBER 14, 2010 EVAN B. HUNTSINGER

Expires 6/30/13

APPROVALS:

SUPERVISING ENGINEER — REG. PROF. ENGR. NO. 14956PE

CITY ENGINEER — REG. PROF. ENGR. NO. 51538PE

CITY OF PORTLAND BUREAU OF TRANSPORTATION

CHARLIE HALES, MAYOR
STEVE TOWNSEN, P.E., CITY ENGINEER

CITY OF PORTLAND OREGON 1851

NE/SE 50s Bikeway: NE Thompson to SE Woodstock

MULTNOMAH COUNTY

Elevation Detail Plans

SHEET NO. 2F-4

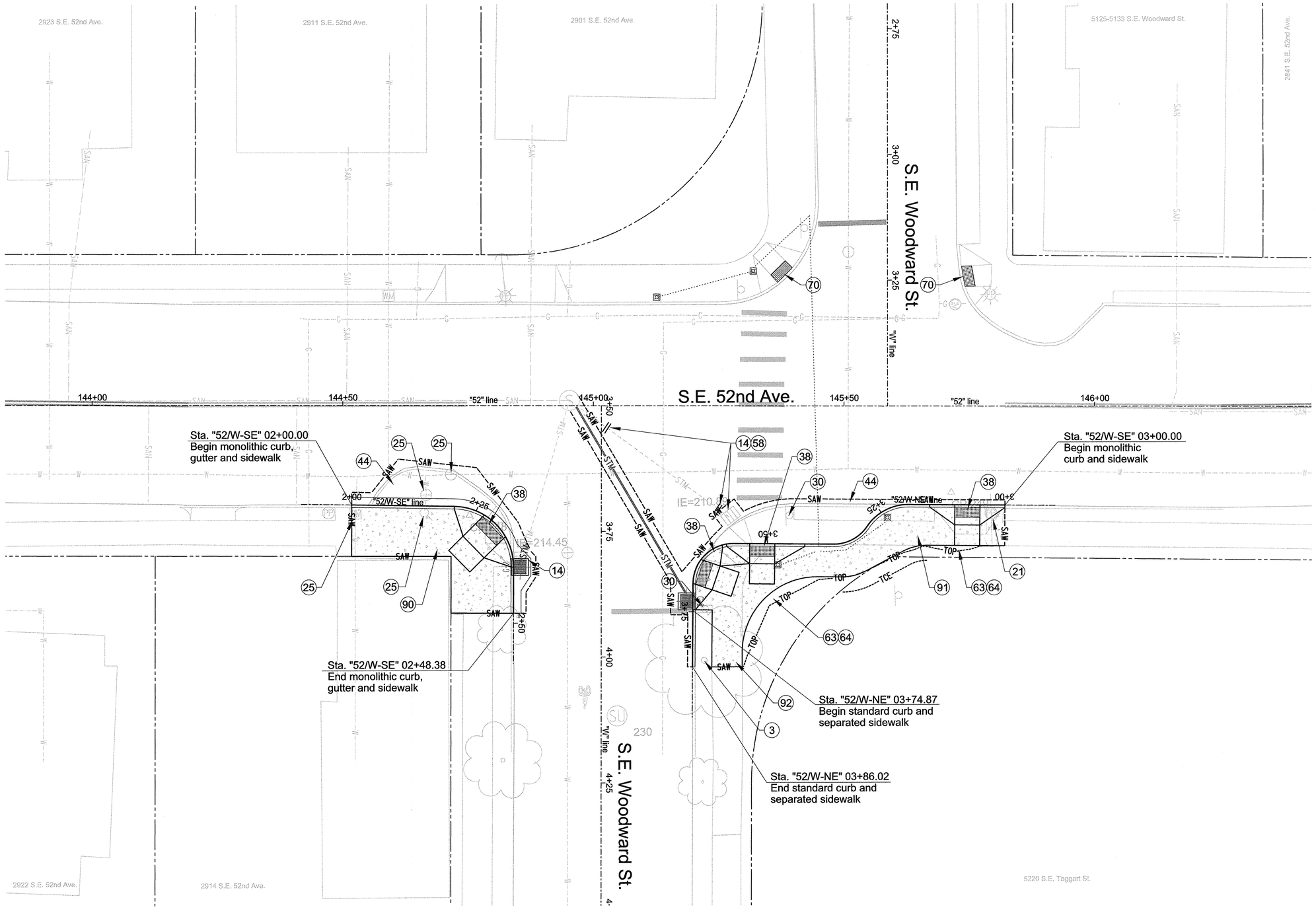

Construction Notes

3 Save tree - 1.

14 Remove inlet - 2.

21 Utility pole to remain.

25 Adjust water facility.

30 Relocate sign and post - 2.

38 Construct monolithic sidewalk ramp. See Sht. 2F-1.

44 Construct 10 in. asphalt concrete pavement repair.

58 Install permanent pipe plug - 2.

63 Install topsoil - in. thick.

64 Install lawn seeding.

70 Install Truncated Domes. See Std. Drg. No. RD759.

90 Construct monolithic curb, gutter and sidewalk. See detail B on sht. 2B.

91 Construct monolithic curb and sidewalk. See detail A on sht. 2B.

92 Construct standard curb and separated sidewalk. See detail C on sht. 2B.

NO.	DATE	DESCRIPTION	APPD.

REVISION

DESIGNED BY R. Webb	DATE APPROVED Apr. 2013	
CAD BY D. Ramer C. Shearer	DIV. ENGINEER S. Townsen	PROJECT NO. T00121
CHECKED BY E. Huntsinger		1/4 SECTION 2836,2936,3036 3136,3236,3336 3436,3536,3636
PROJECT NUMBER STP-5900(246)		

REGISTERED PROFESSIONAL ENGINEER 84470PE OREGON SEPTEMBER 14, 2010 EVA B. HUNTSINGER

Expires 6/30/13

APPROVALS:

SUPERVISING ENGINEER — REG. PROF. ENGR. NO. 14956PE

CITY ENGINEER — REG. PROF. ENGR. NO. 51538PE

CITY OF PORTLAND BUREAU OF TRANSPORTATION

CHARLIE HALES
STEVE TOWNSEN, P.E.

MAYOR
CITY ENGINEER

CITY OF PORTLAND, OREGON 1851

NE/SE 50s Bikeway: NE Thompson to SE Woodstock

MULTNOMAH COUNTY

Street Plan
S.E. 52nd Ave. at
S.E. Woodward St.

SHEET NO. 3

Plot Date: 4/1/2013 1:36:08 PM Filename: S:_II_Design\T00121 - 50's Bikeway Woodstock Blvd-Thompson St, SE-NE\CAD\PLAN_SHEETS\SHT 03 STREET PLAN\PLOT_SHT_03.dgn

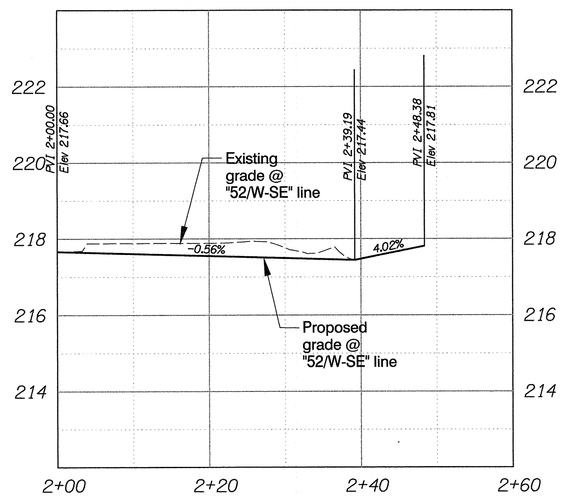

"52/W-SE" line

Profile

Scale: 1" = 2' Vert.
1" = 10' Horiz.

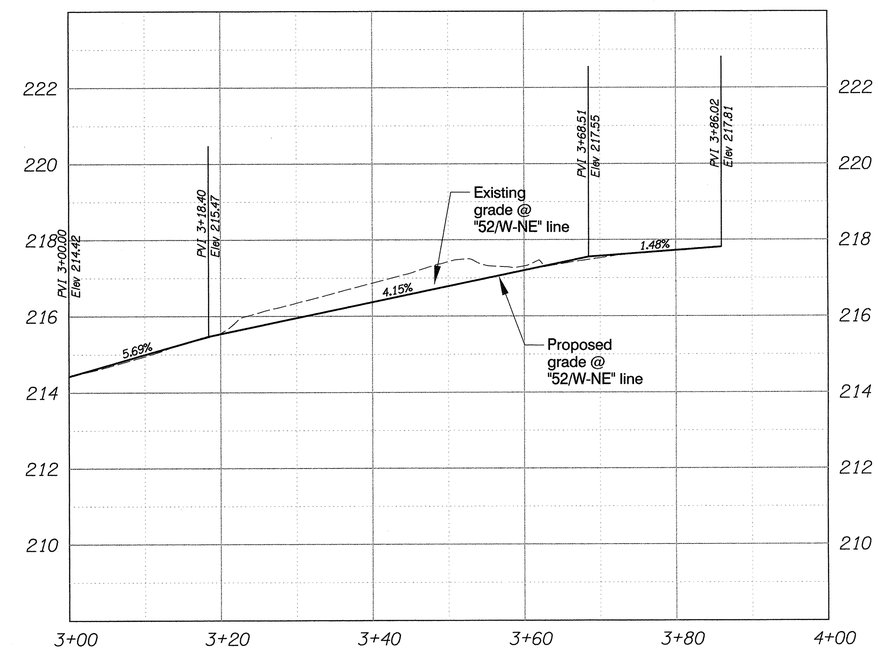

"52/W-NE" line

Profile

Scale: 1" = 2' Vert.
1" = 10' Horiz.

WARNING
0 ½ 1
IF THIS BAR DOES NOT MEASURE 1" THEN DRAWING IS NOT TO SCALE.

NO.	DATE	DESCRIPTION	APPD.

REVISION

DESIGNED BY R. Webb	DATE APPROVED Apr. 2013	
CAD BY D. Ramer C. Shearer	DIV. ENGINEER S. Townsen	PROJECT NO. T00121
CHECKED BY E. Huntsinger		1/4 SECTION
PROJECT NUMBER STP-5900(246)		

REGISTERED PROFESSIONAL ENGINEER 84470PE OREGON SEPTEMBER 14, 2010 EVA B. HUNTSINGER

Expires 6/30/13

APPROVALS:

SUPERVISING ENGINEER — REG. PROF. ENGR. NO. 14956PE

CITY ENGINEER — REG. PROF. ENGR. NO. 51538PE

CITY OF PORTLAND BUREAU OF TRANSPORTATION

CHARLIE HALES, MAYOR
STEVE TOWNSEN, P.E., CITY ENGINEER

CITY OF PORTLAND OREGON 1851

NE/SE 50s Bikeway: NE Thompson to SE Woodstock

MULTNOMAH COUNTY

Street Profiles
S.E. 52nd Ave. at
S.E. Woodward St.

SHEET NO. 3A

Plot Date: 4/1/2013 1:36:10 PM Filename: S:_II_Design\T00121 - 50's Bikeway Woodstock Blvd-Thompson St, SE-NE\CAD\PLAN_SHEETS\SHT 03A STREET PROFILE\PLOT_SHT_03A.dgn

Bid Documents

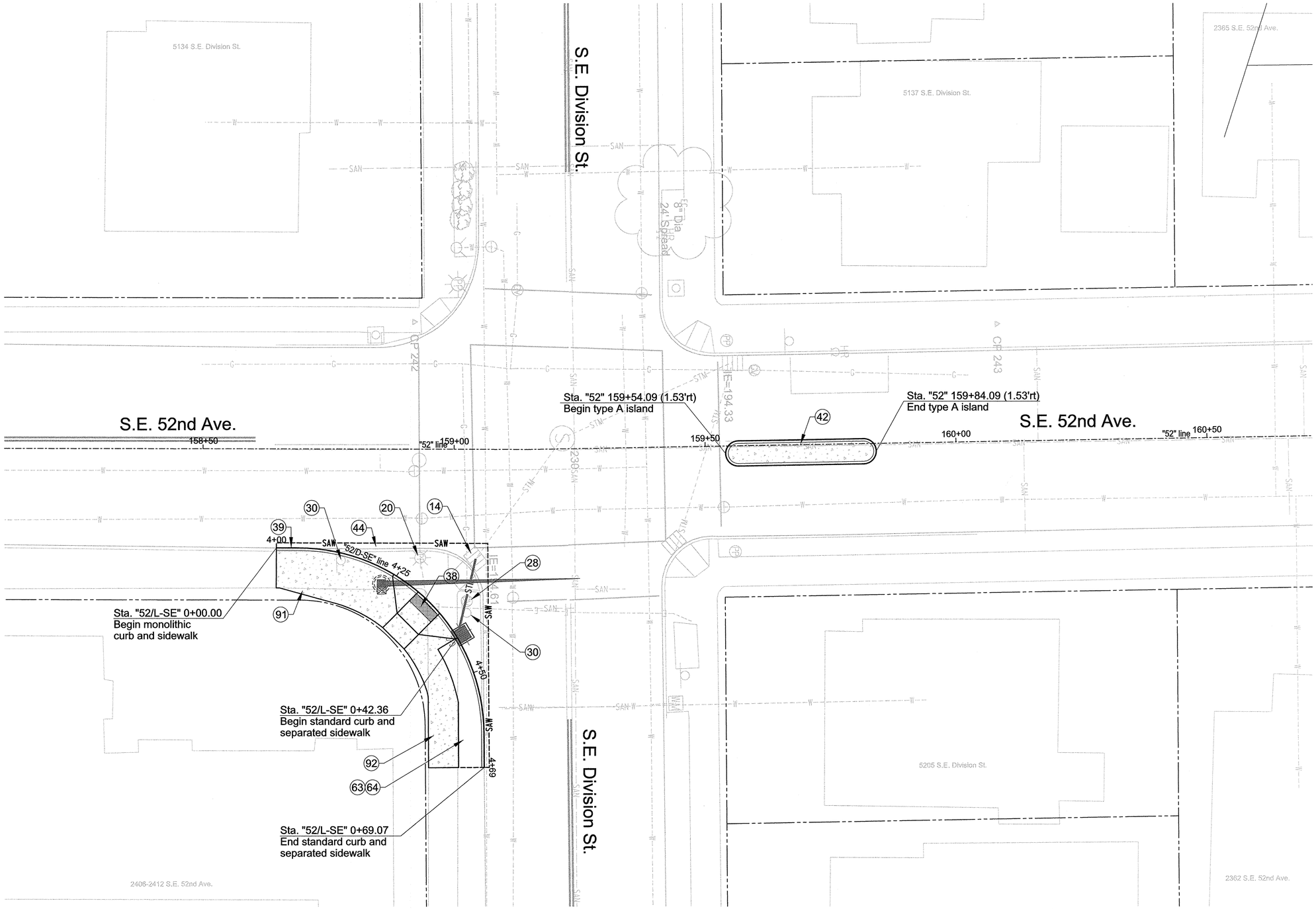

Construction Notes

14 Remove inlet - 2.

20 Relocate utility pole / guy wire (by others).

28 Relocate gas facility (by others).

30 Relocate sign and post - #.

38 Construct monolithic sidewalk ramp. See Sht. 2F-1.

39 Restamp street name in new curb.

42 Construct type A non-mountable island. See Std. Drg. No. RD705.

44 Construct 10 in. asphalt concrete pavement repair.

63 Install topsoil - in. thick.

64 Install lawn seeding.

91 Construct monolithic curb and sidewalk. See detail A on sht. 2B.

92 Construct standard curb and separated sidewalk. See detail C on sht. 2B.

Filename: S:_IL_Design\T00121 - 50's Bikeway Woodstock Blvd-Thompson St, SE-NE\CAD\PLAN_SHEETS\SHT 04 STREET PLAN\PLOT_SHT_04.dgn

Plot Date: 4/1/2013 1:36:14 PM

NO.	DATE	DESCRIPTION	APPD.

REVISION

DESIGNED BY R. Webb	DATE APPROVED Apr. 2013	
CAD BY D. Ramer C. Shearer	DIV. ENGINEER S. Townsen	PROJECT NO. T00121
CHECKED BY E. Huntsinger		T/A SECTION 2836,2936,3036 3136,3236,3336 3436,3536,3636
PROJECT NUMBER STP-5900(246)		

REGISTERED PROFESSIONAL ENGINEER 84470PE OREGON SEPTEMBER 14, 2010 EVA B. HUNTSINGER

Expires 6/30/13

APPROVALS:

SUPERVISING ENGINEER — REG. PROF. ENGR. NO. 14956PE

CITY ENGINEER — REG. PROF. ENGR. NO. 51538PE

CITY OF PORTLAND BUREAU OF TRANSPORTATION

CHARLIE HALES, MAYOR
STEVE TOWNSEN, P.E., CITY ENGINEER

CITY OF PORTLAND OREGON 1851

NE/SE 50s Bikeway: NE Thompson to SE Woodstock

MULTNOMAH COUNTY

Street Plan
S.E. 52nd Ave. at
S.E. Division St.

SHEET NO. 4

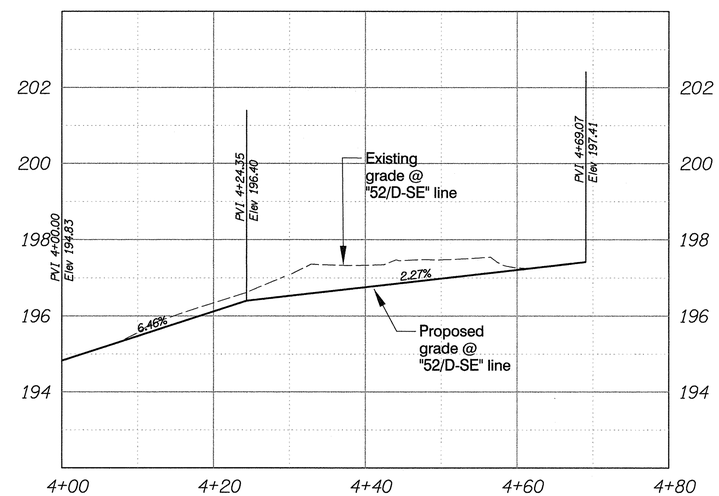

"52/D-SE" line

Profile

Scale: 1" = 2' Vert.
1" = 10' Horiz.

WARNING
0 1/2 1
IF THIS BAR DOES NOT MEASURE 1" THEN DRAWING IS NOT TO SCALE.

NO.	DATE	DESCRIPTION	APPD.
		REVISION	

DESIGNED BY R. Webb	DATE APPROVED Apr. 2013	
CAD BY D. Ramer C. Shearer	DIV. ENGINEER S. Townsen	PROJECT NO. T00121
CHECKED BY E. Huntsinger		1/4 SECTION
PROJECT NUMBER STP-5900(246)		

REGISTERED PROFESSIONAL ENGINEER 84470PE OREGON SEPTEMBER 14, 2010 EVA B. HUNTSINGER
Expires 6/30/13

APPROVALS:
SUPERVISING ENGINEER — REG. PROF. ENGR. NO. 14956PE
CITY ENGINEER — REG. PROF. ENGR. NO. 51538PE

CITY OF PORTLAND BUREAU OF TRANSPORTATION
CHARLIE HALES, MAYOR
STEVE TOWNSEN, P.E., CITY ENGINEER

CITY OF PORTLAND OREGON 1851

NE/SE 50s Bikeway: NE Thompson to SE Woodstock
MULTNOMAH COUNTY

Street Profiles
S.E. 52nd Ave. at
S.E. Division St.

SHEET NO. 4A

Plot Date: 4/1/2013 1:36:15 PM Filename: S:_JL_Design\T00121- 50's Bikeway Woodstock Blvd-Thompson St, SE-NE\CAD\PLAN_SHEETS\SHT 04A STREET PROFILE\PLOT_SHT_04A.dgn

Bid Documents

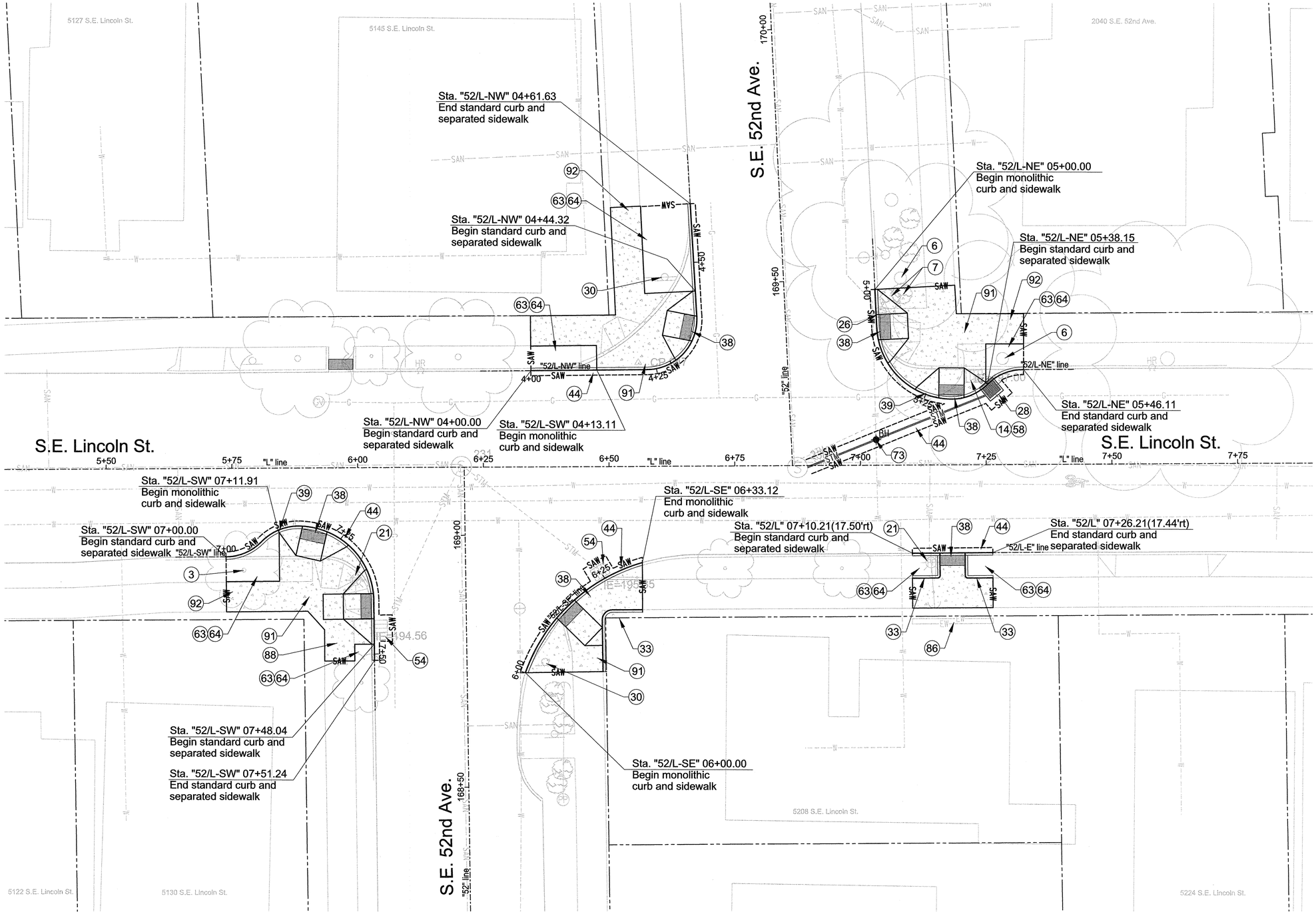

Construction Notes

3 Save tree - 1.

6 Remove tree - 2.

7 Remove brush, hedge or other vegetation - 2.

14 Remove inlet - 1.

21 Utility pole to remain.

26 Relocate water facility (by others).

28 Relocate gas facility (by others).

30 Relocate sign and post - 1.

33 Construct standard curb.

38 Construct monolithic sidewalk ramp. See Sht. 2F-2.

39 Restamp street name in new curb.

44 Construct 10 in. asphalt concrete pavement repair.

54 Adjust inlet - 2. See Std. Drg. No. RD376.

58 Install permanent pipe plug - 1.

63 Install topsoil - in. thick.

64 Install lawn seeding.

73 Pothole existing utility to verify depth 1

86 Protect and save existing wall.

88 Restamp sidewalk "1912".

91 Construct monolithic curb and sidewalk. See detail A on sht. 2B.

92 Construct standard curb and separated sidewalk. See detail C on sht. 2B.

Plot Date: 4/1/2013 1:36:20 PM Filename: S:_II_Design\T00121 - 50's Bikeway Woodstock Blvd-Thompson St, SE-NE\CAD\PLAN_SHEETS\SHT 05 STREET PLAN\PLOT_SHT_05.dgn

NO.	DATE	DESCRIPTION	APPD.

REVISION

DESIGNED BY R. Webb	DATE APPROVED Apr. 2013	
CAD BY D. Ramer C. Shearer	DIV. ENGINEER S. Townsen	PROJECT NO. T00121
CHECKED BY E. Huntsinger		1/4 SECTION 2836,2936,3036 3136,3236,3336 3436,3536,3636
PROJECT NUMBER STP-5900(246)		

REGISTERED PROFESSIONAL ENGINEER 84470PE OREGON SEPTEMBER 14, 2010 EVA B. HUNTSINGER

Expires 6/30/13

APPROVALS:

SUPERVISING ENGINEER — REG. PROF. ENGR. NO. 14956PE

CITY ENGINEER — REG. PROF. ENGR. NO. 51538PE

CITY OF PORTLAND BUREAU OF TRANSPORTATION

CHARLIE HALES, MAYOR
STEVE TOWNSEN, P.E., CITY ENGINEER

CITY OF PORTLAND OREGON 1851

NE/SE 50s Bikeway: NE Thompson to SE Woodstock

MULTNOMAH COUNTY

Street Plan
S.E. 52nd Ave. at
S.E. Lincoln St.

SHEET NO. 5

Bid Documents

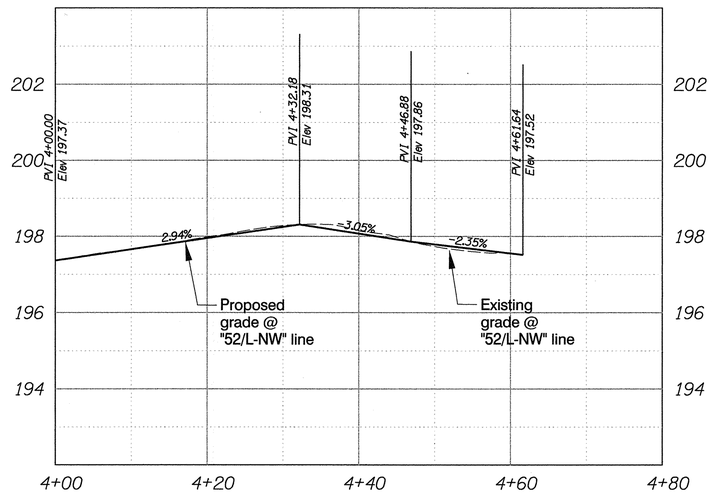

"52/L-NW" line

Profile

Scale: 1" = 2' Vert.
1" = 10' Horiz.

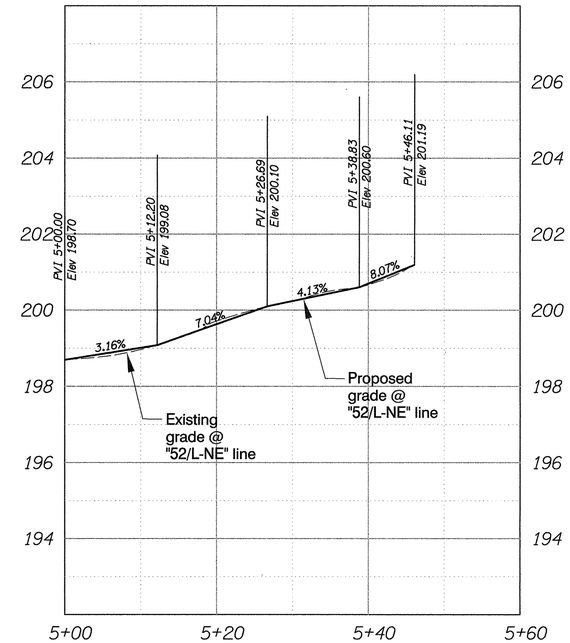

"52/L-NE" line

Profile

Scale: 1" = 2' Vert.
1" = 10' Horiz.

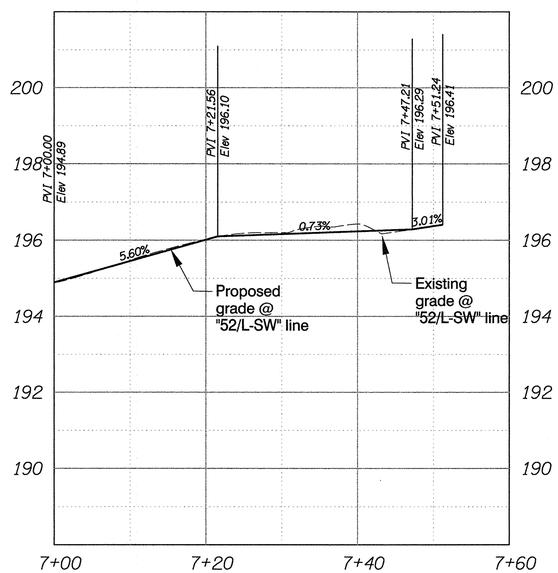

"52/L-SW" line

Profile

Scale: 1" = 2' Vert.
1" = 10' Horiz.

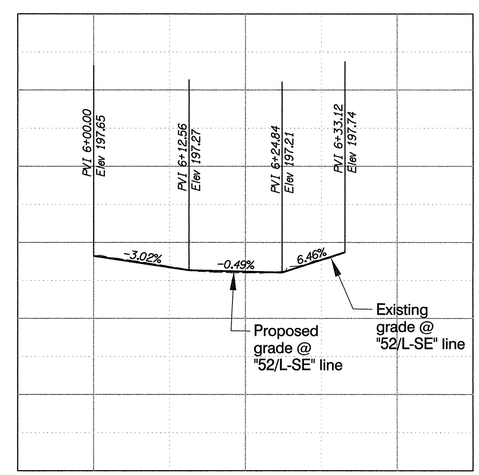

"52/L-SE" line

Profile

Scale: 1" = 2' Vert.
1" = 10' Horiz.

WARNING
0 ½ 1
IF THIS BAR DOES NOT MEASURE 1" THEN DRAWING IS NOT TO SCALE.

NO.	DATE	DESCRIPTION	APPD.

REVISION

DESIGNED BY R. Webb	DATE APPROVED Apr. 2013	
CAD BY D. Ramer C. Shearer	DIV. ENGINEER S. Townsen	PROJECT NO. T00121
CHECKED BY E. Huntsinger		1/4 SECTION
PROJECT NUMBER STP-5900(246)		

REGISTERED PROFESSIONAL ENGINEER 84470PE OREGON SEPTEMBER 14, 2010 EVA B. HUNTSINGER
Expires 6/30/13

APPROVALS:
SUPERVISING ENGINEER — REG. PROF. ENGR. NO. 14956PE
CITY ENGINEER — REG. PROF. ENGR. NO. 51538PE

CITY OF PORTLAND BUREAU OF TRANSPORTATION
CHARLIE HALES, MAYOR
STEVE TOWNSEN, P.E., CITY ENGINEER

CITY OF PORTLAND, OREGON 1851

NE/SE 50s Bikeway: NE Thompson to SE Woodstock
MULTNOMAH COUNTY

Street Profiles
S.E. 52nd Ave. at
S.E. Lincoln St.

SHEET NO. 5A

Filename: S:_II_Design\T00121 - 50's Bikeway Woodstock Blvd-Thompson St, SE-NE\CAD\PLAN_SHEETS\SHT 05A STREET PROFILE\PLOT_SHT_05A.dgn
Plot Date: 4/1/2013 1:36:21 PM

Bid Documents

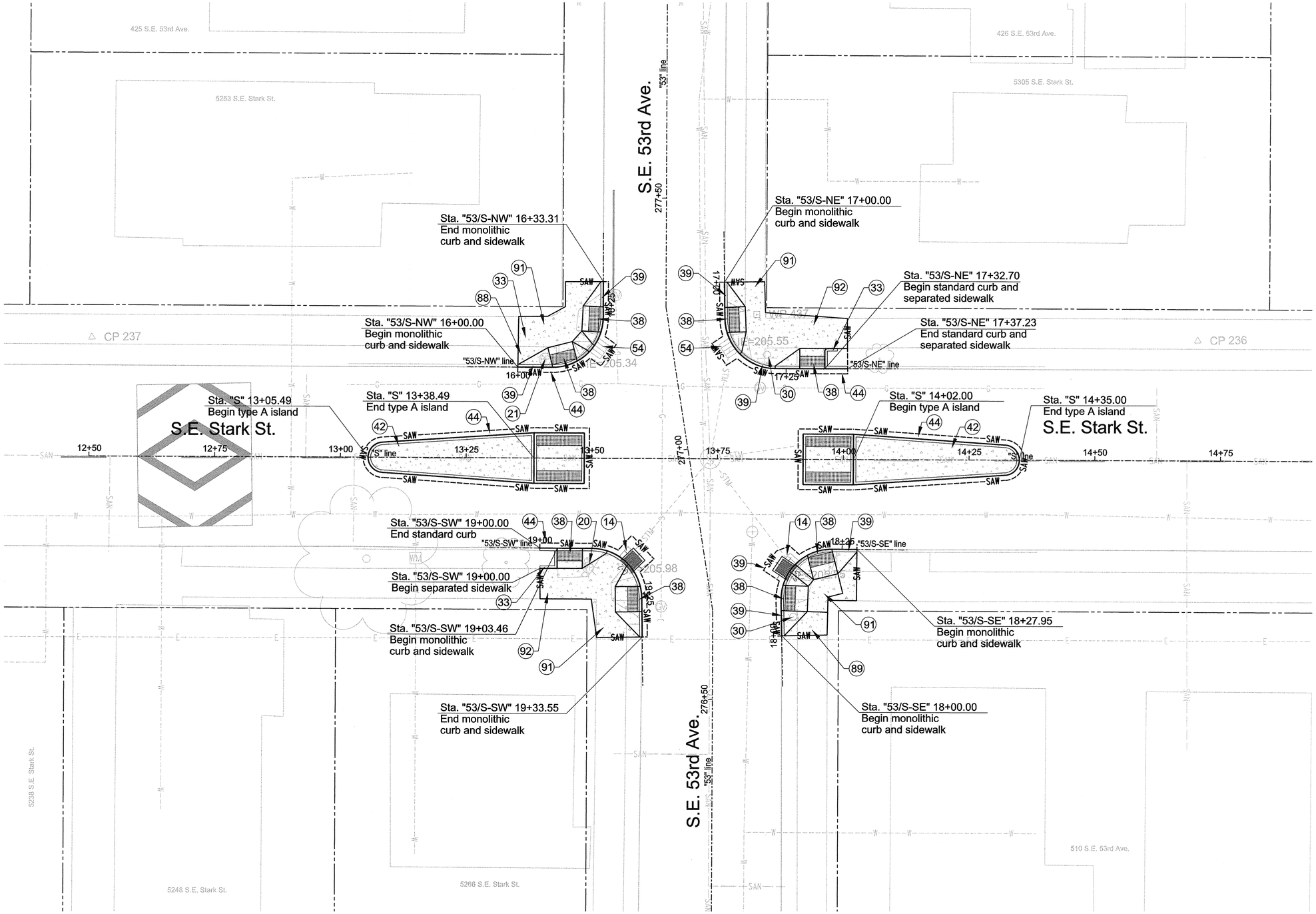

Construction Notes

7 Remove brush, hedge or other vegetation -

14 Remove inlet - 2.

20 Relocate utility pole / guy wire (by others).

21 Utility pole to remain.

30 Relocate sign and post - 2.

33 Construct standard curb.

38 Construct monolithic sidewalk ramp. See Sht. 2F-4.

39 Restamp street name in new curb.

42 Construct type A mountable island. See Sht. 2F-4 and Std. Drg. No. RD705.

44 Construct 10 in. asphalt concrete pavement repair.

54 Adjust inlet - 2. See Std. Drg. No. RD376.

88 Restamp sidewalk "1913".

89 Restamp sidewalk "1911".

91 Construct monolithic curb and sidewalk. See detail A on sht. 2B.

92 Construct standard curb and separated sidewalk. See detail C on sht. 2B.

Plot Date: 4/1/2013 1:36:26 PM Filename: S:_IL_Design\T00121 - 50's Bikeway Woodstock Blvd-Thompson St, SE-NE\CAD\PLAN_SHEETS\SHT 06 STREET PLAN\PLOT_SHT_06.dgn

NO.	DATE	DESCRIPTION	APPD.

REVISION

DESIGNED BY R. Webb	DATE APPROVED Apr. 2013	
CAD BY D. Ramer C. Shearer	DIV. ENGINEER S. Townsen	PROJECT NO. T00121
CHECKED BY E. Huntsinger		1/4 SECTION 2836,2936,3036 3136,3236,3336 3436,3536,3636
PROJECT NUMBER STP-5900(246)		

REGISTERED PROFESSIONAL ENGINEER 84470PE OREGON SEPTEMBER 14, 2010 KEVIN B. HUNTSINGER

Expires 6/30/13

APPROVALS:

SUPERVISING ENGINEER — REG. PROF. ENGR. NO. 16398PE

CITY ENGINEER — REG. PROF. ENGR. NO. 51538PE

CITY OF PORTLAND BUREAU OF TRANSPORTATION

CHARLIE HALES, MAYOR
STEVE TOWNSEN, P.E., CITY ENGINEER

CITY OF PORTLAND, OREGON 1851

NE/SE 50s Bikeway: NE Thompson to SE Woodstock

MULTNOMAH COUNTY

Street Plan
S.E. 53rd Ave. at
S.E. Stark St. St.

SHEET NO. 6

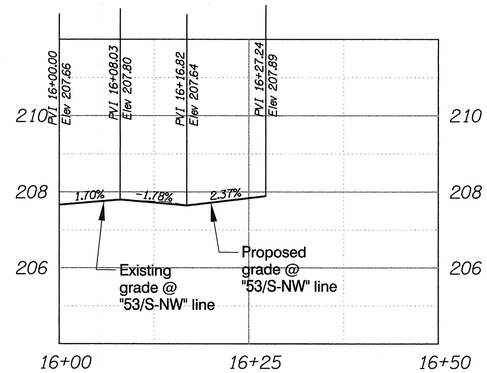

"53/S-NW" line

Profile

Scale: 1" = 2' Vert.
1" = 10' Horiz.

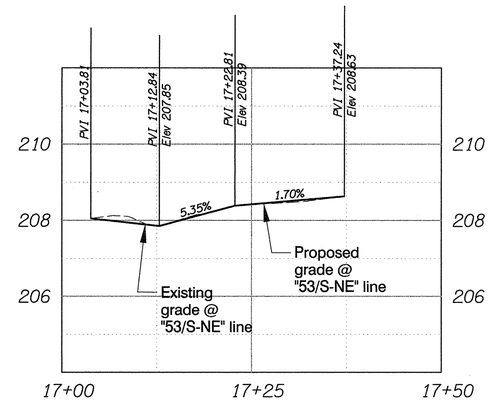

"53/S-NE" line

Profile

Scale: 1" = 2' Vert.
1" = 10' Horiz.

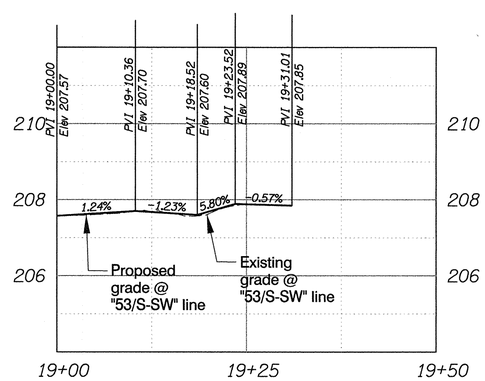

"53/S-SW" line

Profile

Scale: 1" = 2' Vert.
1" = 10' Horiz.

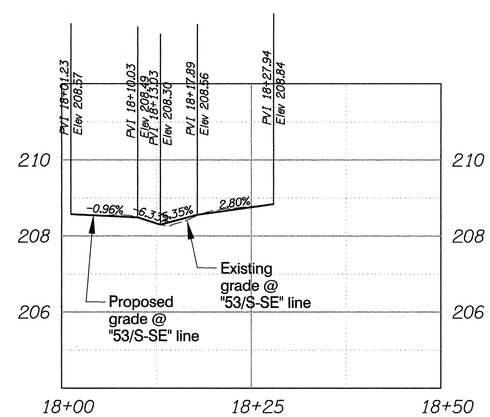

"53/S-SE" line

Profile

Scale: 1" = 2' Vert.
1" = 10' Horiz.

Filename: S:_II_Design\T00121- 50's Bikeway Woodstock Blvd-Thompson St, SE-NE\CAD\PLAN_SHEETS\SHT 06A STREET PROFILE\PLOT_SHT_06A.dgn

Plot Date: 4/1/2013 1:36:27 PM

WARNING
0 ½ 1
IF THIS BAR DOES NOT MEASURE 1" THEN DRAWING IS NOT TO SCALE.

NO.	DATE	DESCRIPTION	APPD.
		REVISION	

DESIGNED BY R. Webb	DATE APPROVED Apr. 2013
CAD BY D. Ramer C. Shearer	DIV. ENGINEER S. Townsen
CHECKED BY E. Huntsinger	PROJECT NO. T00121
	1/4 SECTION
PROJECT NUMBER STP-5900(246)	

REGISTERED PROFESSIONAL ENGINEER 84470PE OREGON SEPTEMBER 14, 2005 EVA B. HUNTSINGER
Expires 6/30/13

APPROVALS:

SUPERVISING ENGINEER — REG. PROF. ENGR. NO. 14956PE

CITY ENGINEER — REG. PROF. ENGR. NO. 51538PE

CITY OF PORTLAND BUREAU OF TRANSPORTATION

CHARLIE HALES, MAYOR
STEVE TOWNSEN, P.E., CITY ENGINEER

CITY OF PORTLAND, OREGON 1851

NE/SE 50s Bikeway: NE Thompson to SE Woodstock

MULTNOMAH COUNTY

Street Profiles
S.E. 52nd Ave. at
S.E. Stark St. St

SHEET NO. 6A

Bid Documents

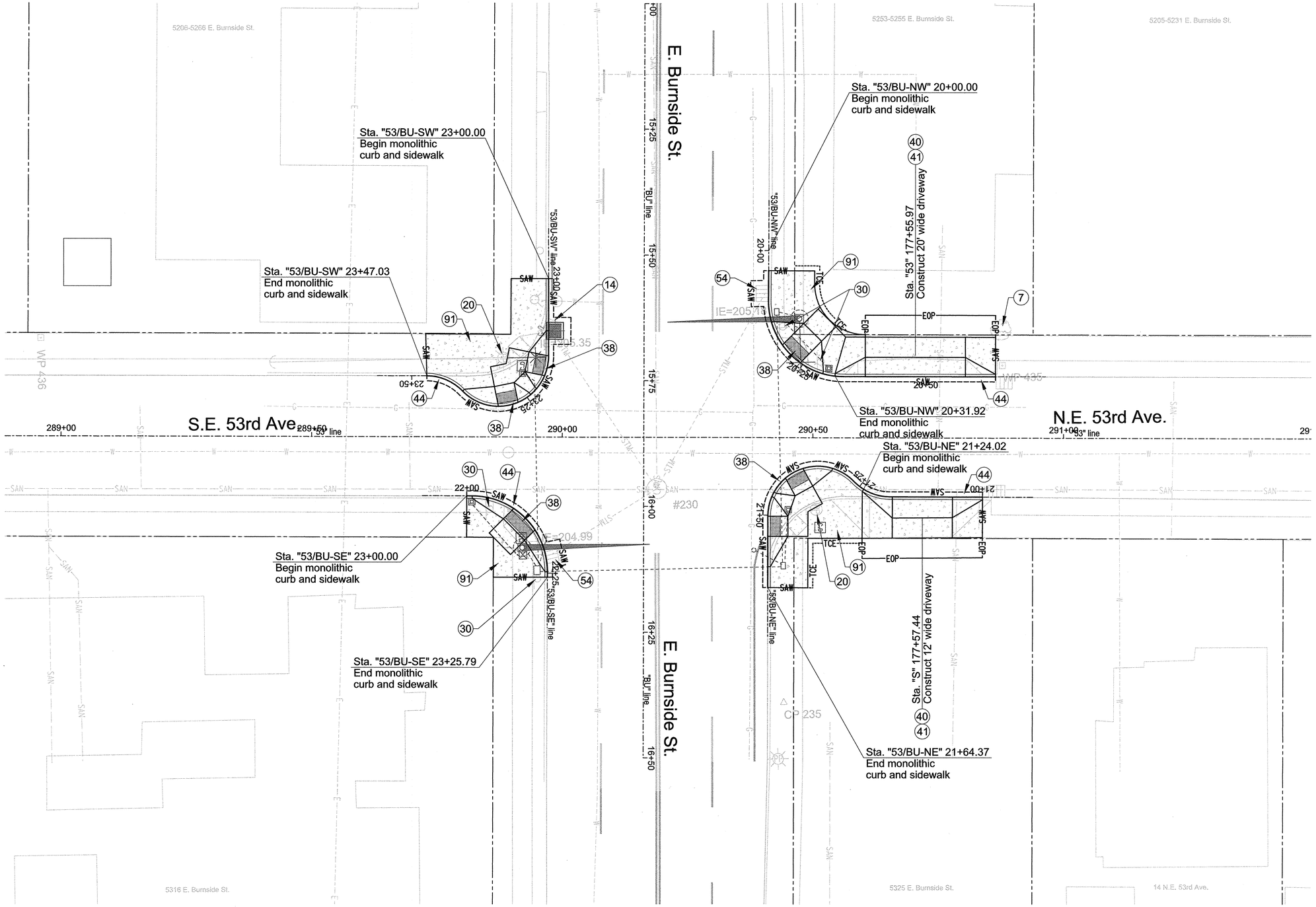

Construction Notes

7 Remove brush, hedge or other vegetation

14 Remove inlet - 1.

20 Relocate utility pole / guy wire (by others).

30 Relocate sign and post - 3.

33 Construct standard curb.

38 Construct monolithic sidewalk ramp. See Sht. 2F-5.

40 Construct concrete driveway. See Sht. 2F-5 and Std. Drg. No. P-528.

41 Construct AC driveway connection. See Std. Drg. No. P-536.

44 Construct 10 in. asphalt concrete pavement repair.

54 Adjust inlet - 2. See Std. Drg. No. RD376

91 Construct monolithic curb and sidewalk. See detail A on sht. 2B.

NO.	DATE	DESCRIPTION	APPD.

REVISION

DESIGNED BY R. Webb	DATE APPROVED Apr. 2013	
CAD BY D. Ramer C. Shearer	DIV. ENGINEER S. Townsen	PROJECT NO. T00121
CHECKED BY E. Huntsinger		1/4 SECTION 2836,2936,3036 3136,3236,3336 3436,3536,3636
PROJECT NUMBER STP-5900(246)		

REGISTERED PROFESSIONAL ENGINEER 84470PE OREGON SEPTEMBER 14, 2010 ELIA B. HUNTSINGER

Expires 6/30/13

APPROVALS:

SUPERVISING ENGINEER — REG. PROF. ENGR. NO. 14956PE

CITY ENGINEER — REG. PROF. ENGR. NO. 51538PE

CITY OF PORTLAND BUREAU OF TRANSPORTATION

CHARLIE HALES, MAYOR
STEVE TOWNSEN, P.E., CITY ENGINEER

CITY OF PORTLAND, OREGON 1851

NE/SE 50s Bikeway: NE Thompson to SE Woodstock

MULTNOMAH COUNTY

Street Plan
S.E. 53rd Ave. at
E. Burnside St.

SHEET NO. 7

Plot Date: 4/9/2013 11:37:42 AM Filename: S:_IL_Design\T00121- 50's Bikeway Woodstock Blvd-Thompson St, SE-NE\CAD\PLAN_SHEETS\SHT 07 STREET PLAN\PLOT_SHT_07.dgn

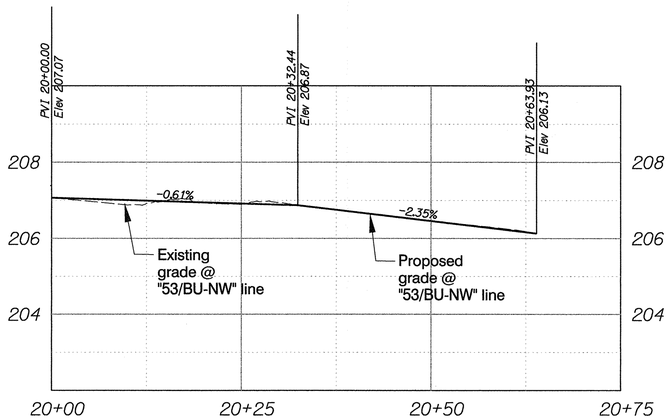

"53/BU-NW" line
Profile
Scale: 1" = 2' Vert.
1" = 10' Horiz.

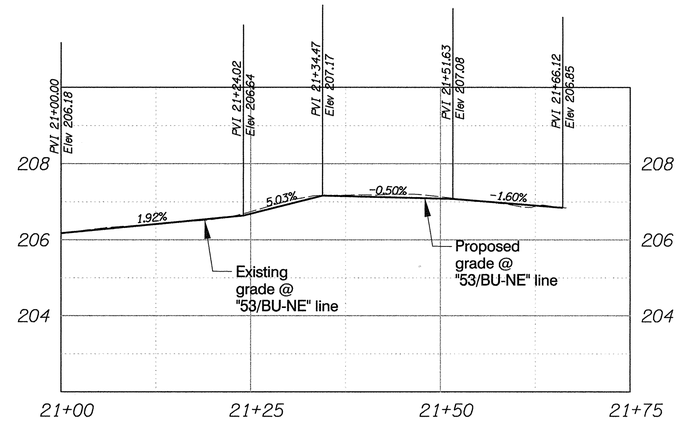

"53/BU-NE" line
Profile
Scale: 1" = 2' Vert.
1" = 10' Horiz.

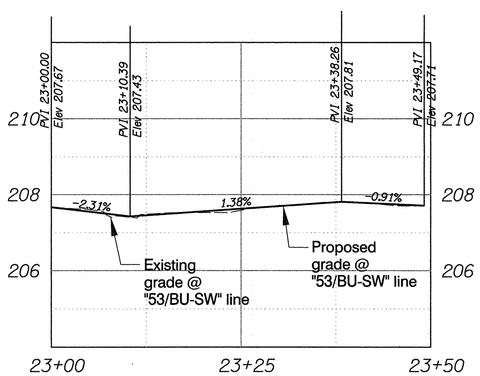

"53/BU-SW" line
Profile
Scale: 1" = 2' Vert.
1" = 10' Horiz.

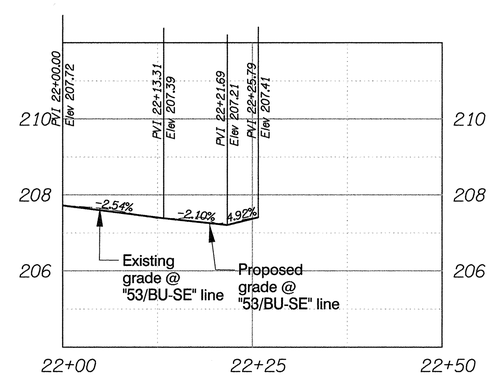

"53/BU-SE" line
Profile
Scale: 1" = 2' Vert.
1" = 10' Horiz.

WARNING
0 ½ 1
IF THIS BAR DOES NOT MEASURE 1" THEN DRAWING IS NOT TO SCALE.

NO.	DATE	DESCRIPTION	APPD.

REVISION

DESIGNED BY R. Webb | DATE APPROVED Apr. 2013
CAD BY D. Ramer, C. Shearer | DIV. ENGINEER S. Townsen | PROJECT NO. T00121
CHECKED BY E. Huntsinger | 1/4 SECTION
PROJECT NUMBER STP-5900(246)

REGISTERED PROFESSIONAL ENGINEER 84470PE OREGON SEPTEMBER 14, 2010 ELIA B. HUNTSINGER
Expires 6/30/13

APPROVALS:
SUPERVISING ENGINEER — REG. PROF. ENGR. NO. 14956PE
CITY ENGINEER — REG. PROF. ENGR. NO. 51538PE

CITY OF PORTLAND BUREAU OF TRANSPORTATION
CHARLIE HALES, MAYOR
STEVE TOWNSEN, P.E., CITY ENGINEER

NE/SE 50s Bikeway: NE Thompson to SE Woodstock
MULTNOMAH COUNTY
Street Profiles S.E. 53rd Ave. at E. Burnside St.
SHEET NO. 7A

Plot Date: 4/1/2013 1:36:33 PM Filename: S:_II_Design\T00121 - 50's Bikeway Woodstock Blvd-Thompson St, SE-NE\CAD\PLAN_SHEETS\SHT 07A STREET PROFILE\PLOT_SHT_07A.dgn

Bid Documents

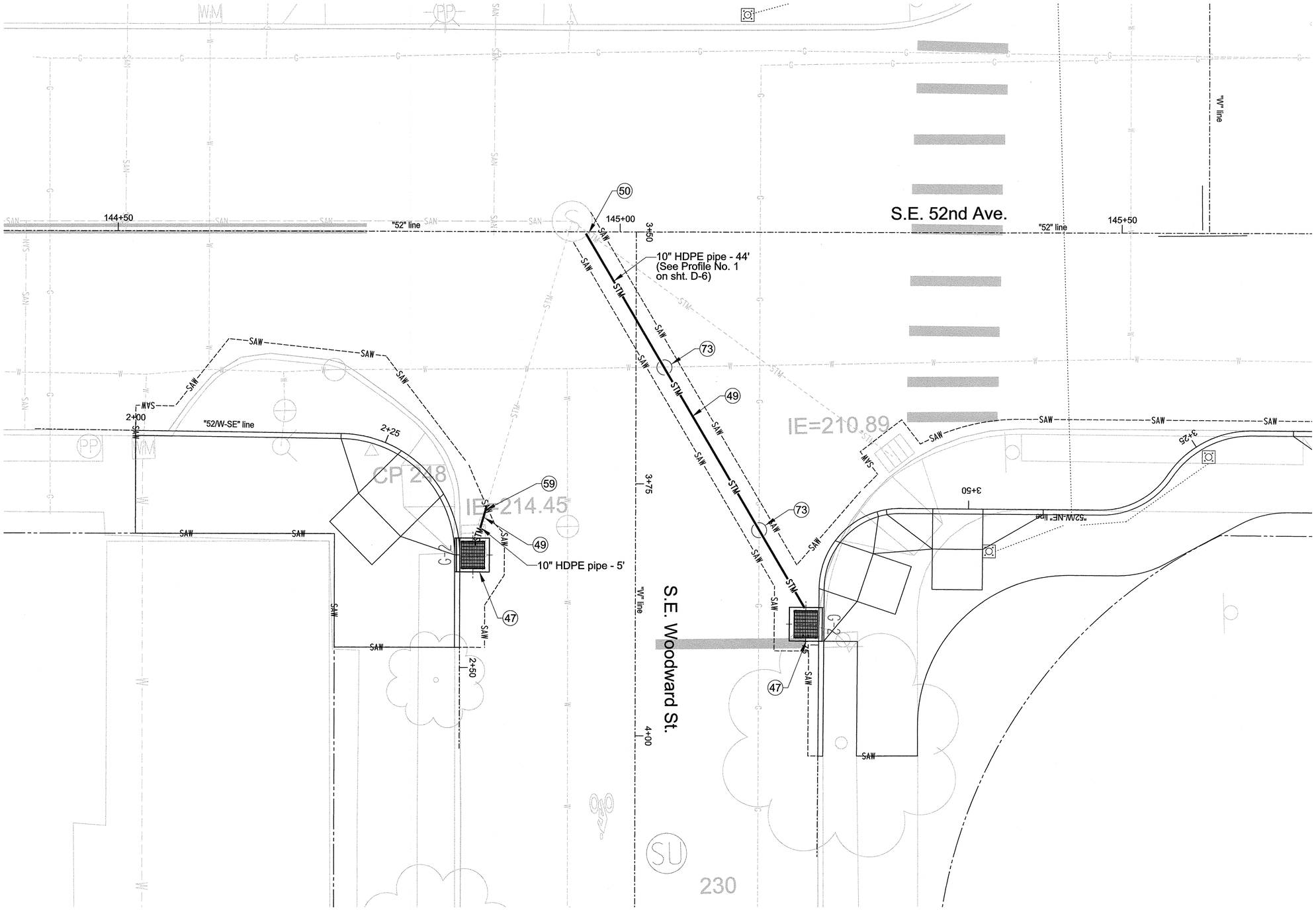

Construction Notes

47 Construct type G-2 inlet - 2.
See Std. Drg. No. RD364.

49 Install 10 in. storm sewer pipe - 49 ft.

51 Connect pipe to existing manhole - 1.

59 Connect pipe to existing lead - 1.

73 Pothole existing utility to verify depth - 2

0 5 10 15 20
FEET

Plot Date: 4/1/2013 11:36:38 PM Filename: S:_IL_Design\T00121- 50's Bikeway Woodstock Blvd-Thompson St, SE-NE\CAD\PLAN_SHEETS\SHT D-01 STORMWATER PLAN\PLOT_SHT_D-01.dgn

NO.	DATE	DESCRIPTION	APPD.

REVISION

DESIGNED BY R. Webb	DATE APPROVED Apr. 2013	
CAD BY D. Ramer C. Shearer	DIV. ENGINEER S. Townsen	PROJECT NO. T00121
CHECKED BY E. Huntsinger		1/4 SECTION 2836,2936,3036 3136,3236,3336 3436,3536,3636
PROJECT NUMBER STP-5900(246)		

REGISTERED PROFESSIONAL ENGINEER 84470PE OREGON SEPTEMBER 14, 2010 EVA B. HUNTSINGER

Expires 6/30/13

APPROVALS:

SUPERVISING ENGINEER — REG. PROF. ENGR. NO. 14956PE

CITY ENGINEER — REG. PROF. ENGR. NO. 51538PE

CITY OF PORTLAND BUREAU OF TRANSPORTATION

CHARLIE HALES, MAYOR
STEVE TOWNSEN, P.E., CITY ENGINEER

CITY OF PORTLAND, OREGON 1851

NE/SE 50s Bikeway: NE Thompson to SE Woodstock

MULTNOMAH COUNTY

Stormwater Plan
S.E. 52nd Ave. at
S.E. Woodward St.

SHEET NO. D-1

Bid Documents

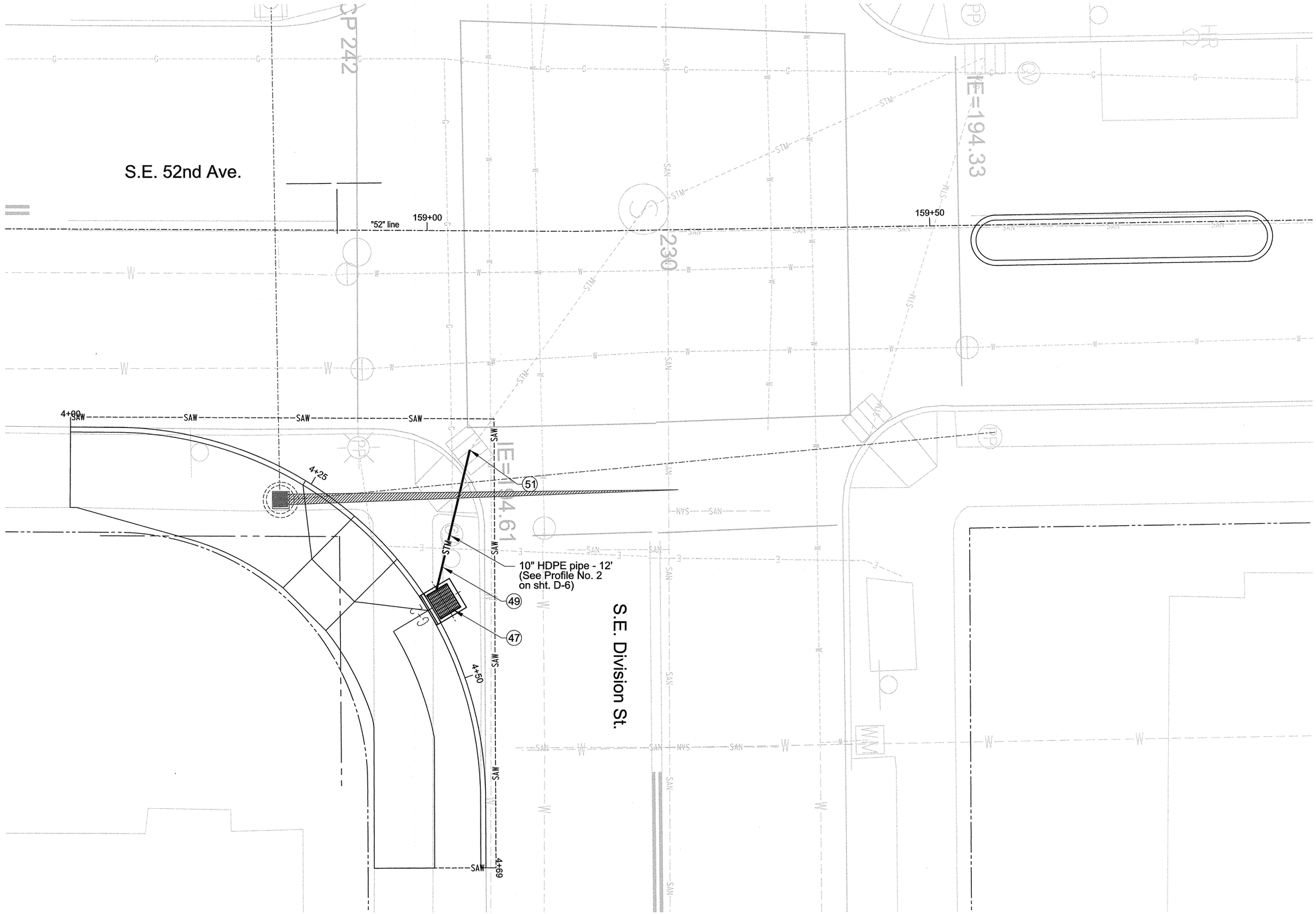

Construction Notes

47 Construct type G-2 inlet - 1.
See Std. Drg. No. RD364.

49 Install 10 in. storm sewer pipe - 12 ft.

51 Connect pipe to existing inlet - 1.

0 5 10 15 20
FEET

NO.	DATE	DESCRIPTION	APPD.

REVISION

DESIGNED BY R. Webb	DATE APPROVED Apr. 2013	
CAD BY D. Ramer C. Shearer	DIV. ENGINEER S. Townsen	PROJECT NO. T00121
CHECKED BY E. Huntsinger		1/4 SECTION 2836,2936,3036 3136,3236,3336 3436,3536,3636
PROJECT NUMBER STP-5900(246)		

REGISTERED PROFESSIONAL ENGINEER 84470PE OREGON SEPTEMBER 14, 2010 EVA B. HUNTSINGER

Expires 6/30/13

APPROVALS:

SUPERVISING ENGINEER — REG. PROF. ENGR. NO. 14956PE

CITY ENGINEER — REG. PROF. ENGR. NO. 51538PE

CITY OF PORTLAND BUREAU OF TRANSPORTATION

CHARLIE HALES, MAYOR
STEVE TOWNSEN, P.E., CITY ENGINEER

CITY OF PORTLAND, OREGON 1851

NE/SE 50s Bikeway: NE Thompson to SE Woodstock

MULTNOMAH COUNTY

Stormwater Plan
S.E. 52nd Ave. at
S.E. Division St.

SHEET NO. D-2

Plot Date: 4/1/2013 1:36:39 PM Filename: S:_II_Design\T00121- 50's Bikeway Woodstock Blvd-Thompson St, SE-NE\CAD\PLAN_SHEETS\SHT D-02 STORMWATER PLAN\PLOT_SHT_D-02.dgn

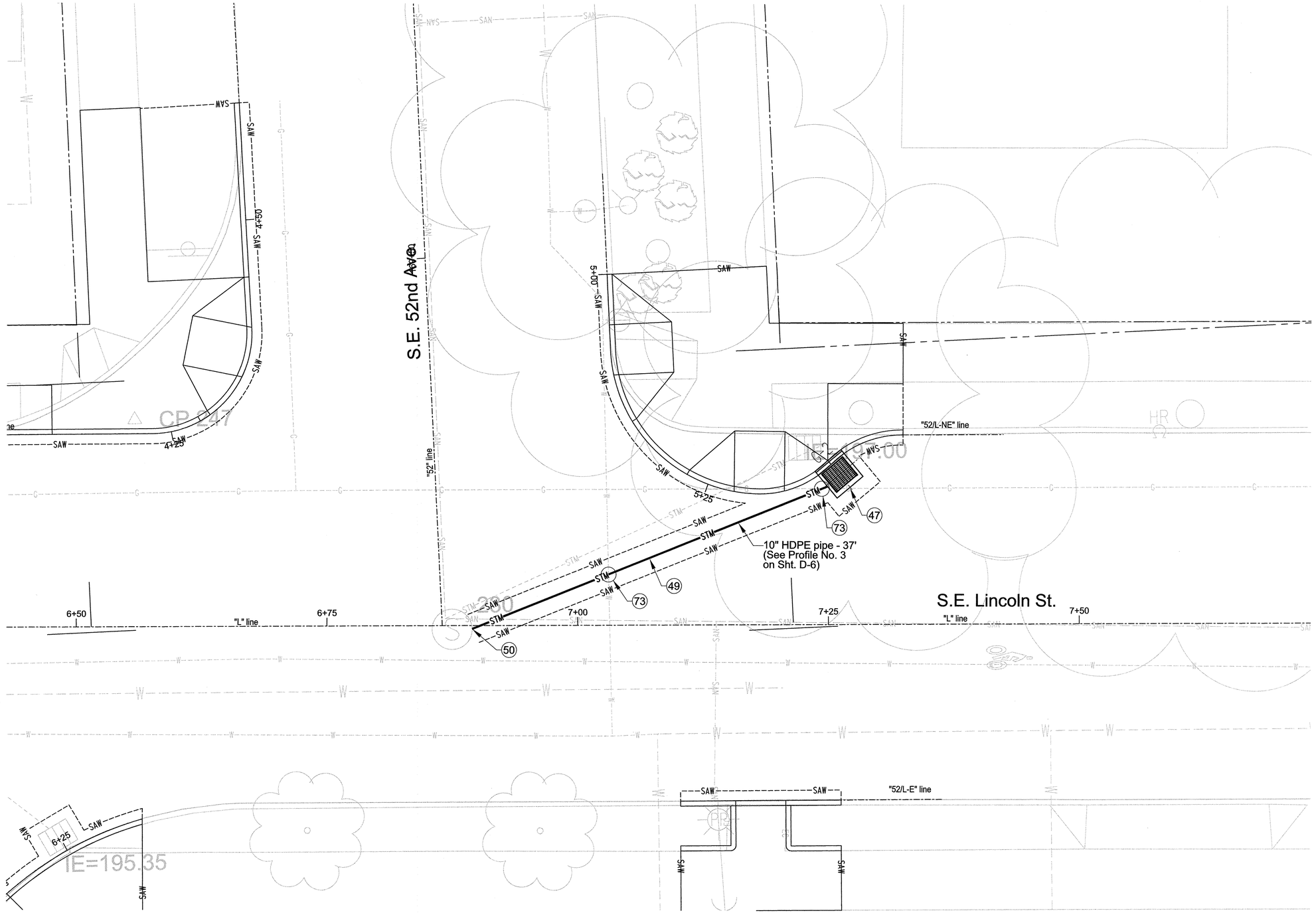

Construction Notes

47 Construct type G-2 inlet - 1.
See Std. Drg. No. RD-364.

49 Install 10 in. storm sewer pipe - 37 ft.

50 Connect pipe to existing manhole - 1.

73 Pothole existing utility to verify depth - 2

0 5 10 15 20
FEET

NO.	DATE	DESCRIPTION	APPD.

REVISION

DESIGNED BY R. Webb	DATE APPROVED Apr. 2013	
CAD BY D. Ramer C. Shearer	DIV. ENGINEER S. Townsen	PROJECT NO. T00121
CHECKED BY E. Huntsinger		1/4 SECTION 2836,2936,3036 3136,3236,3336 3436,3536,3636
PROJECT NUMBER STP-5900(246)		

REGISTERED PROFESSIONAL ENGINEER 84470PE OREGON SEPTEMBER 14, 2010 EVA B. HUNTSINGER
Expires 6/30/13

APPROVALS:

SUPERVISING ENGINEER — REG. PROF. ENGR. NO. 14956PE

CITY ENGINEER — REG. PROF. ENGR. NO. 51538PE

CITY OF PORTLAND BUREAU OF TRANSPORTATION

CHARLIE HALES, MAYOR
STEVE TOWNSEN, P.E., CITY ENGINEER

CITY OF PORTLAND OREGON 1851

NE/SE 50s Bikeway: NE Thompson to SE Woodstock

MULTNOMAH COUNTY

Stormwater Plan
S.E. 52nd Ave. at
S.E. Lincoln St.

SHEET NO. D-3

Plot Date: 4/1/2013 1:36:40 PM Filename: S:_II_Design\T00121 - 50's Bikeway Woodstock Blvd-Thompson St, SE-NE\CAD\PLAN_SHEETS\SHT D-03 STORMWATER PLAN\PLOT_SHT_D-03.dgn

Bid Documents

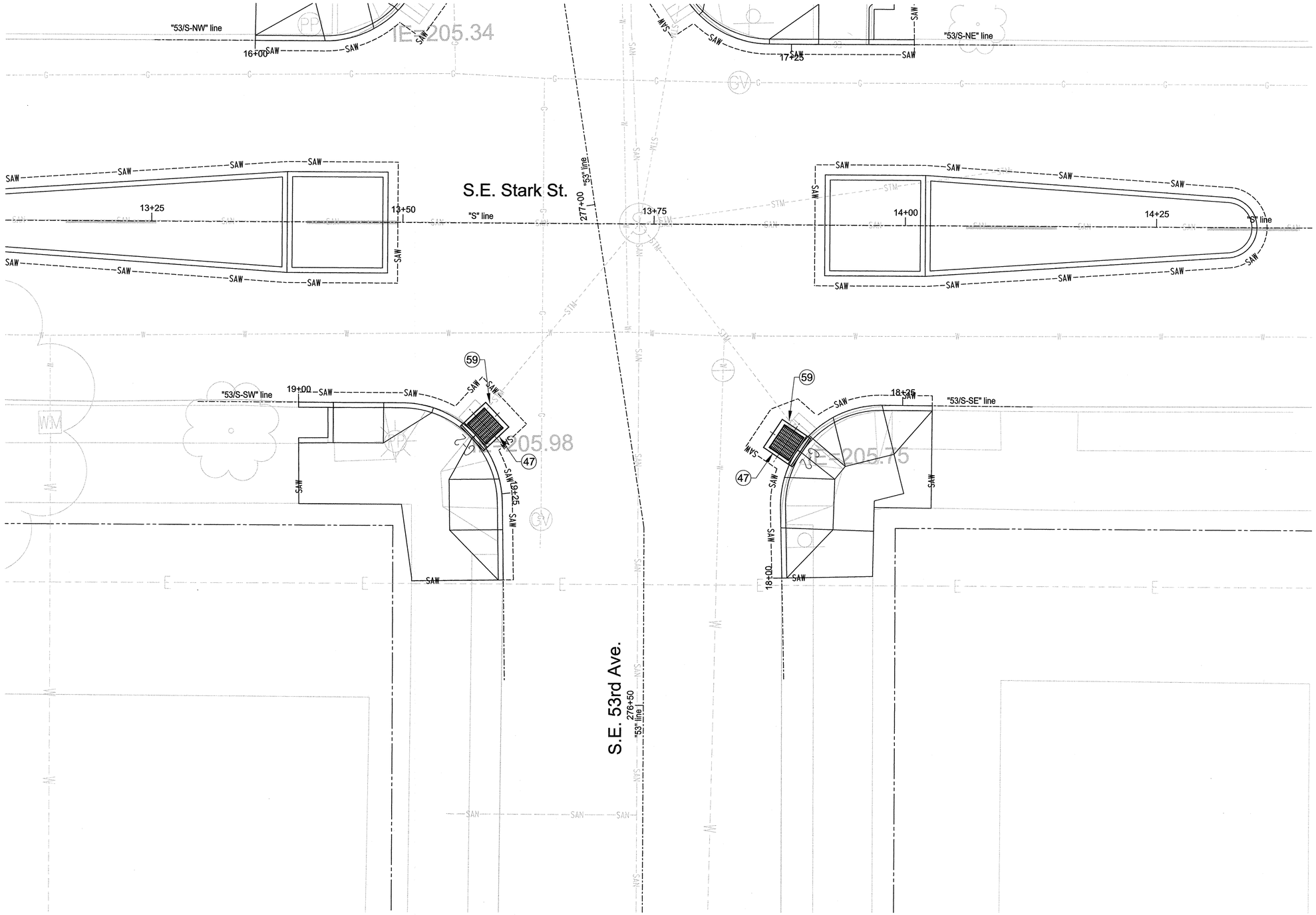

Construction Notes

47 Construct type G-2 inlet - 2. See Std. Drg. No. RD-364.

59 Connect inlet to existing lead - 2.

N

0 5 10 15 20

FEET

Filename: S:_IL_Design\T00121 - 50's Bikeway Woodstock Blvd-Thompson St, SE-NE\CAD\PLAN_SHEETS\SHT D-04 STORMWATER PLAN\PLOT_SHT_D-04.dgn

Plot Date: 4/1/2013 1:36:41 PM

NO.	DATE	DESCRIPTION	APPD.

REVISION

DESIGNED BY R. Webb	DATE APPROVED Apr. 2013	
CAD BY D. Ramer C. Shearer	DIV. ENGINEER S. Townsen	PROJECT NO. T00121
CHECKED BY E. Huntsinger		1/4 SECTION 2836,2936,3036 3136,3236,3336 3436,3536,3636
PROJECT NUMBER STP-5900(246)		

REGISTERED PROFESSIONAL ENGINEER 84470PE OREGON SEPTEMBER 14, 2010 EVA B. HUNTSINGER

Expires 6/30/13

APPROVALS:

SUPERVISING ENGINEER — REG. PROF. ENGR. NO. 14956PE

CITY ENGINEER — REG. PROF. ENGR. NO. 51538PE

CITY OF PORTLAND BUREAU OF TRANSPORTATION

CHARLIE HALES, MAYOR

STEVE TOWNSEN, P.E., CITY ENGINEER

CITY OF PORTLAND, OREGON 1851

NE/SE 50s Bikeway: NE Thompson to SE Woodstock

MULTNOMAH COUNTY

Stormwater Plan
S.E. 53rd Ave. at
S.E. Stark St. St.

SHEET NO. D-4

Bid Documents

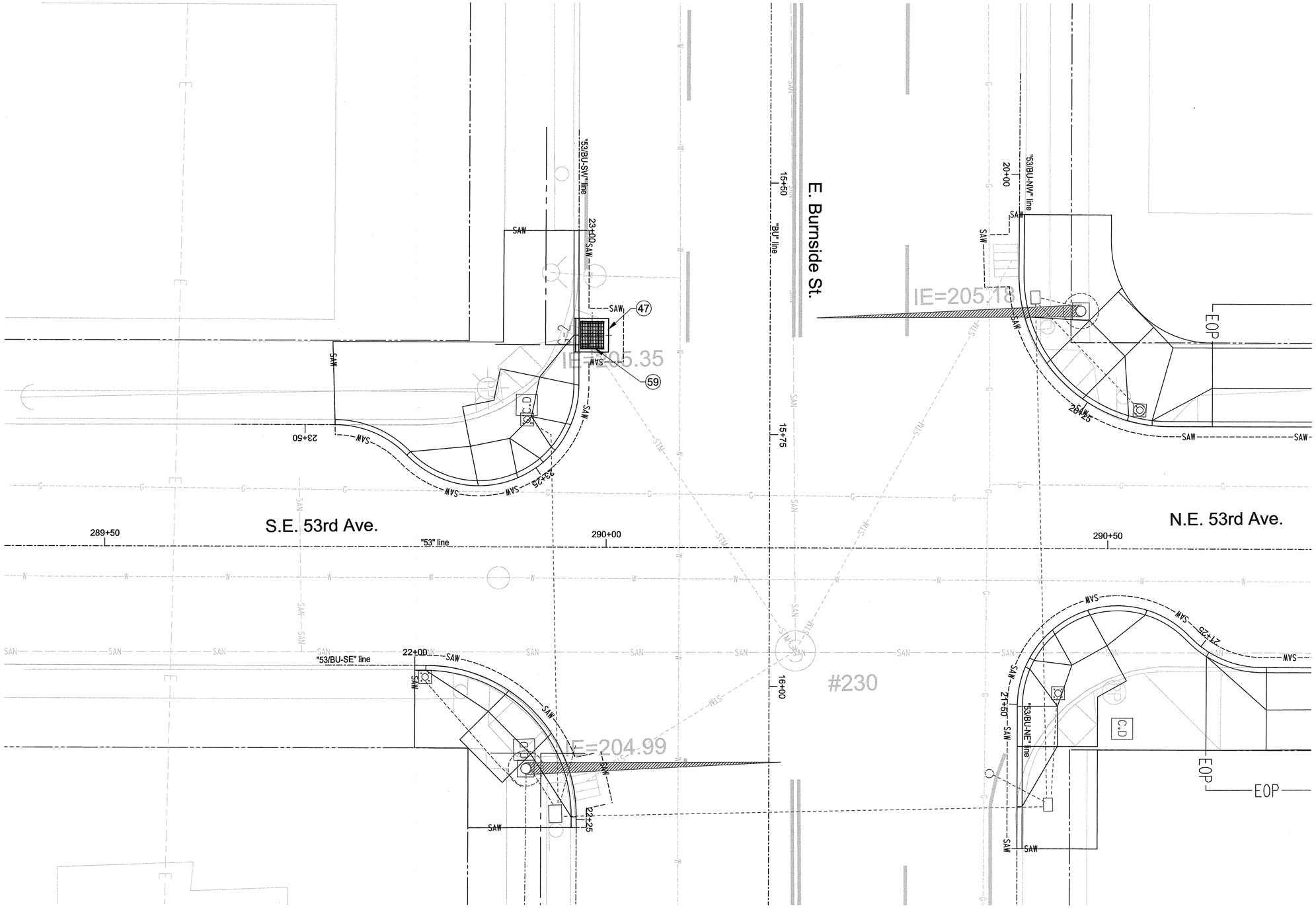

Construction Notes

47 Construct type G-2 inlet - 1.
See Std. Drg. No. RD-364.

59 Connect inlet to existing lead - 1.

NO.	DATE	DESCRIPTION	APPD.

REVISION

DESIGNED BY R. Webb	DATE APPROVED Apr. 2013	
CAD BY D. Ramer C. Shearer	DIV. ENGINEER S. Townsen	PROJECT NO. T00121
CHECKED BY E. Huntsinger		1/4 SECTION 2836 2936 3036 3136 3236 3336 3436 3536 3636
	PROJECT NUMBER STP-5900(246)	

REGISTERED PROFESSIONAL ENGINEER 84470PE OREGON SEPTEMBER 14, 2010 EVA B. HUNTSINGER

Expires 6/30/13

APPROVALS:

SUPERVISING ENGINEER — REG. PROF. ENGR. NO. 14956PE

CITY ENGINEER — REG. PROF. ENGR. NO. 51538PE

CITY OF PORTLAND BUREAU OF TRANSPORTATION

CHARLIE HALES, MAYOR
STEVE TOWNSEN, P.E., CITY ENGINEER

CITY OF PORTLAND, OREGON 1851

NE/SE 50s Bikeway: NE Thompson to SE Woodstock

MULTNOMAH COUNTY

Stormwater Plan
S.E. 53rd Ave. at
E. Burnside St.

SHEET NO. D-5

Plot Date: 4/1/2013 1:36:42 PM Filename: S:_IL_Design\T0121- 50's Bikeway Woodstock Blvd-Thompson St, SE-NE\CAD\PLAN_SHEETS\SHT D-05 STORMWATER PLAN\PLOT_SHT_D-05.dgn

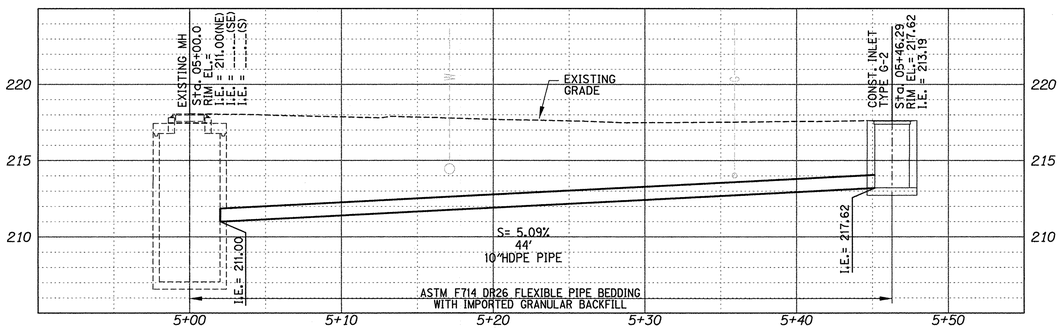

S.E. 52nd Ave. at S.E. Woodward St.

See Sheet D-1

Profile No. 1

Scale: 1" = 5' Vert.
1" = 5' Horiz.

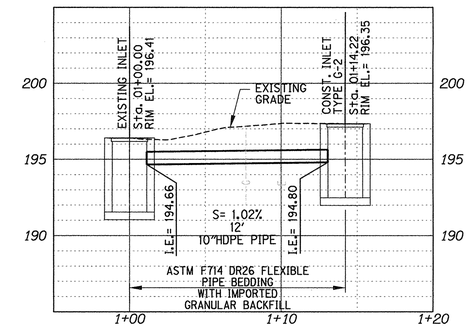

S.E. 52nd Ave. at S.E. Division St.

See Sheet D-2

Profile No. 2

Scale: 1" = 5' Vert.
1" = 5' Horiz.

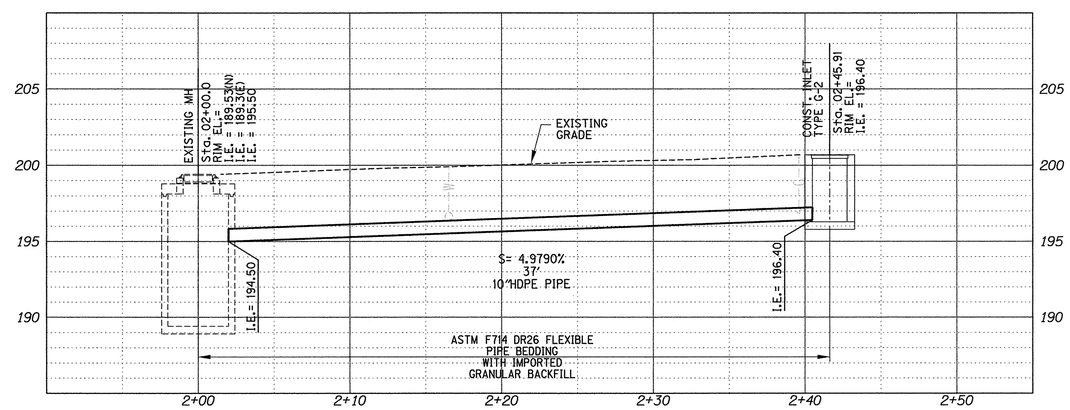

S.E. 52nd Ave. at S.E. Lincoln St.

See Sheet D-3

Profile No. 3

Scale: 1" = 5' Vert.
1" = 5' Horiz.

NO.	DATE	DESCRIPTION	APPD.

REVISION

DESIGNED BY	DATE APPROVED	
R. Webb	Apr. 2013	
CAD BY D. Ramer C. Shearer	DIV. ENGINEER S. Townsen	PROJECT NO. T00121
CHECKED BY E. Huntsinger		1/4 SECTION 2836,2936,3036 3136,3236,3336 3436,3536,3636

PROJECT NUMBER
STP-5900(246)

REGISTERED PROFESSIONAL ENGINEER 84470PE OREGON SEPTEMBER 14, 2001 ELIA B. HUNTSINGER
Expires 6/30/13

APPROVALS:

SUPERVISING ENGINEER — REG. PROF. ENGR. NO. 14956PE

CITY ENGINEER — REG. PROF. ENGR. NO. 51538PE

CITY OF PORTLAND BUREAU OF TRANSPORTATION

CHARLIE HALES, MAYOR
STEVE TOWNSEN, P.E., CITY ENGINEER

CITY OF PORTLAND, OREGON 1851

NE/SE 50s Bikeway: NE Thompson to SE Woodstock

MULTNOMAH COUNTY

Stormwater Profiles

SHEET NO. D-6

Plot Date: 4/1/2013 1:36:43 PM Filename: S:_II_Design\T00121 - 50's Bikeway Woodstock Blvd-Thompson St, SE-NE\CAD\PLAN_SHEETS\SHT D-06 STORMWATER PROFILES\PLOT_SHT_D-06.dgn

PIPE DATA SHEET

SHEET NUMBER	NOTE ON PLANS	MAXIMUM DEPTH TO FLOWLINE	PIPE: CIRCULAR OR ELLIPIICAL: SIZE IN (Inches) 4	6	8	10	12	15	16	18	21	24	LENGTH IN FEET	PIPE - ARCH: HELICAL Riveted Welded or Lock Seam	EQUIV. RND SIZE (Inches)	Length (Feet)	CROSS-SECTIONAL DEIMENSIONS: SPAN (FEET-INCHES)	RISE	Corner Radii (Inches)	USE / INSTALLATION CRITERIA: DRAIN (PERFORATED)	CULVERT (ROAD APPROACH)	CULVERT (CONDUIT)	CULVERT	IRRIGATION	SIPHON	STORM SEWER	OTHERS SEE REMARKS	WATERTIGHT JOINTS	SLOPE ANCHORS	IMPERFECT TRENCH	PH	RESISTIVITY (HUNDREDS)	TERMINAL TREATMENT: LT./RT.	SLOPED ENDS Not 4 Conc. Pipe over 60" Dia.	SKEW NUMBER	PAVED END SLOPES No.
D-1	49	4				5										X										X										
D-1	49	4				44										X										X										
D-2	49	4				12										X										X										
D-3	49	4				37										X										X										

ALTERNATE MATERIALS — HELICAL CORRUGATED METAL

SHEET NUMBER	ALUMINUM SIZE OF CORRUGATIONS: RIVETED, WELDED OR LOCK SEAM 1 1/2" x 1/4" PLATE THKN. (Inches)	Coss Section 3	2 2/3" x 1/2" PLATE THKN. (Inches)	Coss Section 3	3" x 1" PLATE THKN. (Inches)	Coss Section 3	COATING 5	LOCK SEAM SMOOTH WALL PIRAL RIB PLATE THKN. (Inches) 3/4" x 3/4" 1 1/2" O.C. 3/4" x 1"	5/8" x 3/4" @ 12" O.C.	Coss Section 3	COATING GALVANIZED 5	ALUMINIZED 5	ALUMINIZED OR GALVANIZED IRON AND STEEL SIZE OF CORRUGATIONS: RIVETED. WELDED OR LOCK SEAM 1 1/2" x 1/4" PLATE THKN. (Inches)	Coss Section 3	2 2/3" x 1/2" PLATE THKN. (Inches)	Coss Section 3	3" x 1" PLATE THKN. (Inches)	Coss Section 3	COATING GALVANIZED 5	ALUMINIZED 5	LOCK SEAM SMOOTH WALL PIRAL RIB PLATE THKN. (Inches) 3/4" x 3/4" 1 1/2" O.C. 3/4" x 1"	5/8" x 3/4" @ 12" O.C.	Coss Section 3	GALVANIZED 5	ALUMINIZED 5	RIGID PRE-CAST CONCRETE PLAIN 1	2	3	REINF. iii	iv	v	SPECIAL Polyvinylechloride ASTM D3034, AWWA C-900, Class 150	HDPE ASTM DR-26
D-1																																			X	
D-1																																			X	
D-2																																			X	
D-3																																			X	

APPURTENANCES — MANHOLES

SHEET NUMBER	(Feet) DEPTH TOP OF COVER TO BOTTOM OF MANHOLE ELEVATION	(In.) DIAMETER OF LARGEST PIPE IN BASE	CONC. PRECAST	CAST-IN-PLACE	DROP MANHOLE	FLAT TOP MANHOLE	SEDIMENTATION MANHOLE	INLETS TYPE BEEHIVE	G-2 (ODOT)	CG-2 (ODOT)	TYPE "D"	LANDSCAPE	NUMBER REQUIRED	EXTENSION LEFT (FEET)	RIGHT	EXTG. PIPE MATERIAL	REMARKS
D-1													X				Connect to existing lead
D-1													X				Connect to existing manhole
D-2													X				Connect to existing lead
D-3													X				Connect to existing manhole

GENERAL NOTES:

1. A check (✓) indicates column heading applies.
2. A new pipe culvert installation shall be of like material throughout.
3. Extension of existing metal culverts may be of unlike metal or corrugations. For connecting details, see Standard Drg. No. RD326.
4. Dimensions shown are nominal.
5. All pipes shall conform to the AASHTO specification applicable for the type of material and the diameter of the pipe involved

FOOTNOTES:

① Design height of cover is the critical design height used to select pipe materials. The height of cover for any given run of pipe may vary. Design height of cover shall be measured to subgrade.

② Cross-sectional dimensions may vary with different materials. When galvanized iron or steel and aluminum are acceptable alternates use a separate line for each type of material.

③ Cross-sectional shape of pipe normal to longitudinal axis, prior to loading
A = Pipe - Arch
R = Round
E = Elliptical (5% nominal elongation)

④ Minimum allowable diameter for Class 1 nonreinforced concrete pipe is 15".

⑤ Abbreviations for protective coatings for metal pipe
A = Type A asphalt coated
C = Type C asphalt coated
D = Type D asphalt coated and fully lined
PM = Polymeric, ¼" thkn. coated both sides
PO = Polyethylene inside lining, polymeric outside
U = Uncoated
CIM = Chevron industrial membrane
Ep = Epoxy coated

⑥ Abbreviations for existing pipe materials
AB = Asbestos cement
Al = Corrugated aluminum
Co = Concrete St = Corrugated steel
Pl = Plastic X = Other material, see remarks column

- ☐ RD300 Trench Backfill, Bedding, Pipe Zone And Multiple Installations
- ☐ RD302 Street Cut
- ☐ RD304 Arch Pipe Backfill/Compaction
- ☐ RD312 Subsurface Drain
- ☐ RD314 Open Grade HMAC Drainage Details
- ☐ RD316 Sloped Ends For Metal Pipes
- ☐ RD318 Sloped Ends For Concrete Pipe
- ☐ RD320 Paved End Slope For Culverts 5'-0" Maximum Pipe Size
- ☐ RD322 Safety End Section Metal Pipe
- ☐ RD324 Safety End Section Concrete Pipe
- ☐ RD326 Coupling Bands For Corrugated Metal Pipe
- ☐ RD328 Slotted C.M.P. Drain Details
- ☐ RD330 Metal Pipe Slope Anchors
- ☐ RD336 Standard Storm Sewer Manhole
- ☐ RD340 Storm Sewer Pollution Control Manhole
- ☐ RD342 Shallow Manholes
- ☐ RD344 Standard 48" Diameter Manhole Base Section
- ☐ RD346 Large Precast Manhole
- ☐ RD348 Manhole With Inlet
- ☐ RD352 Outside Drop Manholes
- ☐ RD356 Manhole Covers And Frames
- ☐ RD358 Manhole Slope Protectors
- ☐ RD360 Manhole Frame Adjustment
- ☐ RD364 Concrete Inlets Types G-1, G-2 & G-2M
- ☐ RD366 Concrete Inlets Type CG-1, CG-2 And Curb Inlet Channel
- ☐ RD368 Concrete Inlets Type ME, M-O, B And B-SL
- ☐ RD370 Ditch Inlet Type D
- ☐ RD372 Concrete Inlets Type CG-3
- ☐ RD374 Area Drainage Basin Or Field Inlet
- ☐ RD376 Miscellaneous Drainage Structures Siphon Box & Inlet Adj. Cap
- ☐ RD380 Fill Height Table - Alum. & Steel Corrugated
- ☐ RD382 Fill Height Table - Alum. & Steel Pipe Arch
- ☐ RD384 Fill Height Table - Alum. & Steel Spiral Rib Pipe
- ☐ RD386 Fill Height Table - Concrete Pipe

NO.	DATE	DESCRIPTION	APPD.

REVISION

DESIGNED BY	DATE APPROVED	
R. Webb	Apr. 2013	
CAD BY D. Ramer C. Shearer	DIV. ENGINEER S. Townsen	PROJECT NO. T00121
CHECKED BY E. Huntsinger		T/4 SECTION 2836,2936,3036 3136,3236,3336 3436,3536,3636

PROJECT NUMBER STP-5900(246)

REGISTERED PROFESSIONAL ENGINEER 84470PE OREGON SEPTEMBER 14, 2010 EVA B. HUNTSINGER

Expires 6/30/13

APPROVALS:

SUPERVISING ENGINEER — REG. PROF. ENGR. NO. 14956PE

CITY ENGINEER — REG. PROF. ENGR. NO. 51538PE

CITY OF PORTLAND BUREAU OF TRANSPORTATION

CHARLIE HALES, MAYOR
STEVE TOWNSEN, P.E., CITY ENGINEER

NE/SE 50s Bikeway: NE Thompson to SE Woodstock

MULTNOMAH COUNTY

Pipe Data Sheet

SHEET NO. D-7

Plot Date: 4/1/2013 1:36:47 PM Filename: S:_IL_Design\T00121 - 50's Bikeway Woodstock Blvd-Thompson St, SE-NE\CAD\PLAN_SHEETS\SHT D-07-VERY-LAST PIPE DATA SHEET\PLOT_SHT_D-07.dgn

Bid Documents

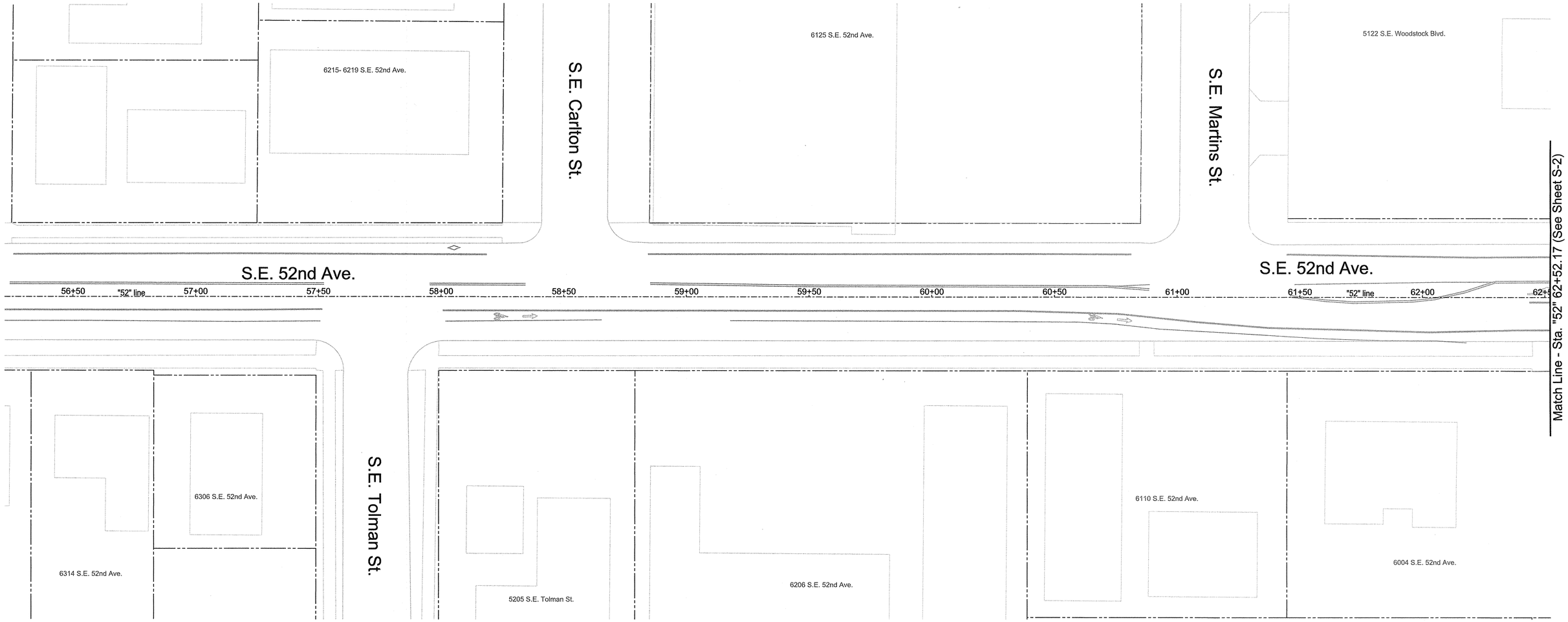

Signing Notes:

1.) Refer to traffic sign bubble and traffic sign number legends shown on sheets S-43 thru S-45.

2.) Refer to signing details shown on "P-" sheets.

3.) Contractor to coordinate with TriMet to relocate signs.

Striping Notes:

1.) Remove all conflicting striping and pavement markings.

2.) Refer to pavement marking standard detail blocks shown on "P-" sheets and "TM" sheets.

3.) All longitudinal line work to be paint except for W-2 turn lane markings.

4.) All W-2 turn lane markings to be non-profile, 120 mil., extruded thermoplastic.

5.) All S and CW transverse line work to be Type "A" thermoplastic.

6.) All legend, symbols, arrows and CW-SC transverse line work to be Type "B-HS" thermoplastic.

0 20 40 60 80
FEET

NOTE:
NO CONTRACT WORK THIS SHEET
INCLUDED FOR REFERENCE ONLY

NO.	DATE	DESCRIPTION	APPD.
		REVISION	

DESIGNED BY A. Sullivan	DATE APPROVED Apr. 2013
CAD BY D. Ramer C. Shearer	PROJECT NO. T00121
CHECKED BY J. Tower	T.A. SECTION 2836,2936,3036 3136,3236,3336 3436,3536,3636
PROJECT NUMBER STP-5900(246)	

REGISTERED PROFESSIONAL ENGINEER 16399PE OREGON JULY 10, 1993 LEWIS H. WARDRIP
Expires 6/30/14

APPROVALS:
SUPERVISING ENGINEER — REG. PROF. ENGR. NO. 16399PE
CITY ENGINEER — REG. PROF. ENGR. NO. 51538PE

CITY OF PORTLAND BUREAU OF TRANSPORTATION
CHARLIE HALES, MAYOR
STEVE TOWNSEN, P.E., CITY ENGINEER

CITY OF PORTLAND, OREGON 1851

NE/SE 50s Bikeway: NE Thompson to SE Woodstock
MULTNOMAH COUNTY

Permanent Signing & Striping Plan
Sta. "52" 56+23.00 to
Sta. "52" 62+52.17

SHEET NO. S-1

Plot Date: 4/1/2013 1:37:13 PM Filename: S:_ILDesign\T00121- 50's Bikeway Woodstock Blvd-Thompson St, SE-NE\CAD\PLAN_SHEETS\SHT S-01PERMANENT SIGNING AND STRIPING PLAN\PLOT_SHT_S-01.dgn

Bid Documents

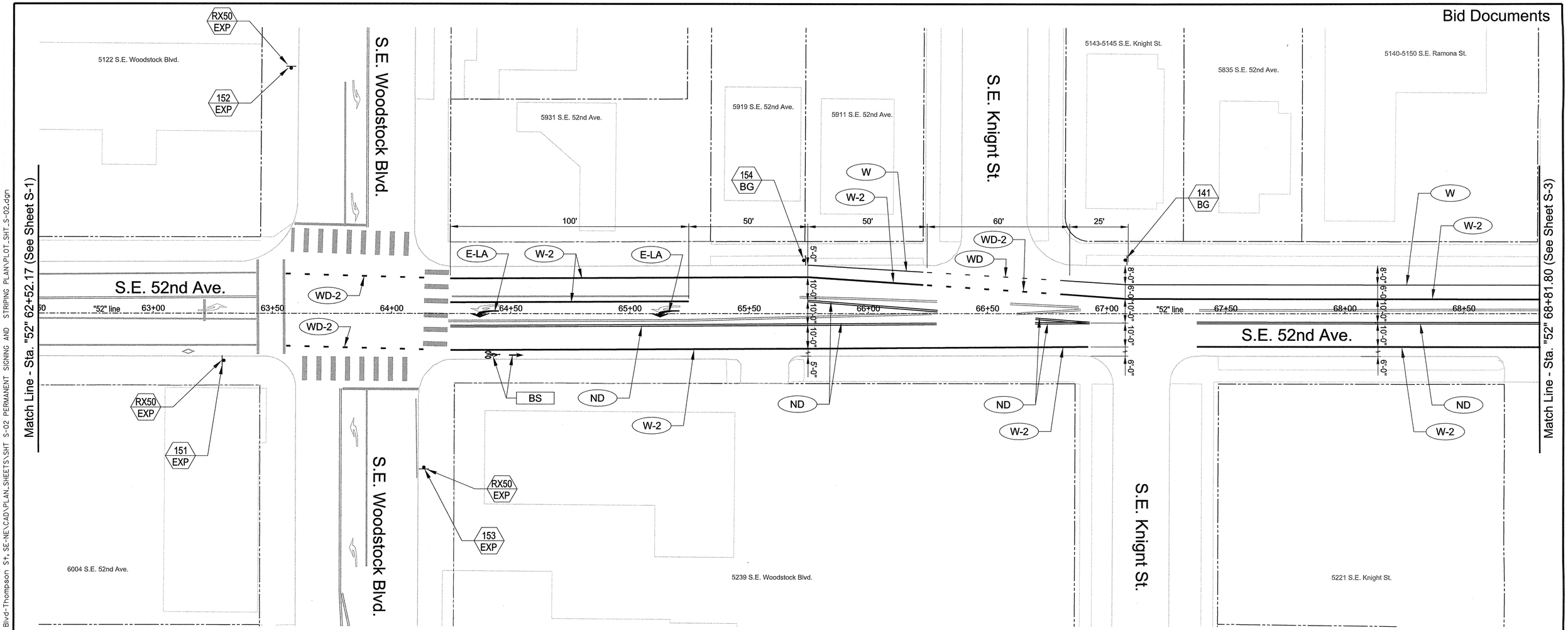

Signing Notes:

1.) Refer to traffic sign bubble and traffic sign number legends shown on sheets S-43 thru S-45.

2.) Refer to signing details shown on "P-" sheets.

3.) Contractor to coordinate with TriMet to relocate signs.

Striping Notes:

1.) Remove all conflicting striping and pavement markings.

2.) Refer to pavement marking standard detail blocks shown on "P-" sheets and "TM" sheets.

3.) All longitudinal line work to be paint except for W-2 turn lane markings.

4.) All W-2 turn lane markings to be non-profile, 120 mil., extruded thermoplastic.

5.) All S and CW transverse line work to be Type "A" thermoplastic.

6.) All legend, symbols, arrows and CW-SC transverse line work to be Type "B-HS" thermoplastic.

0 20 40 60 80
FEET

NO.	DATE	DESCRIPTION	APPD.
		REVISION	

DESIGNED BY A. Sullivan	DATE APPROVED Apr. 2013	
CAD BY D. Ramer C. Shearer		PROJECT NO. T00121
CHECKED BY J. Tower		T.I.A. SECTION 2836,2936,3036 3136,3236,3336 3436,3536,3636
PROJECT NUMBER STP-5900(246)		

REGISTERED PROFESSIONAL ENGINEER 16399PE OREGON JULY 10, 1993 LEWIS H. WARDRIP
Expires 6/30/14

APPROVALS:
SUPERVISING ENGINEER — REG. PROF. ENGR. NO. 16399PE
CITY ENGINEER — REG. PROF. ENGR. NO. 51538PE

CITY OF PORTLAND BUREAU OF TRANSPORTATION
CHARLIE HALES, MAYOR
STEVE TOWNSEN, P.E., CITY ENGINEER

CITY OF PORTLAND, OREGON 1851

NE/SE 50s Bikeway: NE Thompson to SE Woodstock
MULTNOMAH COUNTY

Permanent Signing & Striping Plan
Sta. "52" 62+52.17 to
Sta. "52" 68+81.80

SHEET NO. S-2

Plot Date: 4/1/2013 1:37:14 PM Filename: S:_IL_Design\T00121 - 50's Bikeway Woodstock Blvd-Thompson St, SE-NE\CAD\PLAN_SHEETS\SHT S-02 PERMANENT SIGNING AND STRIPING PLAN\PLOT_SHT_S-02.dgn

Bid Documents

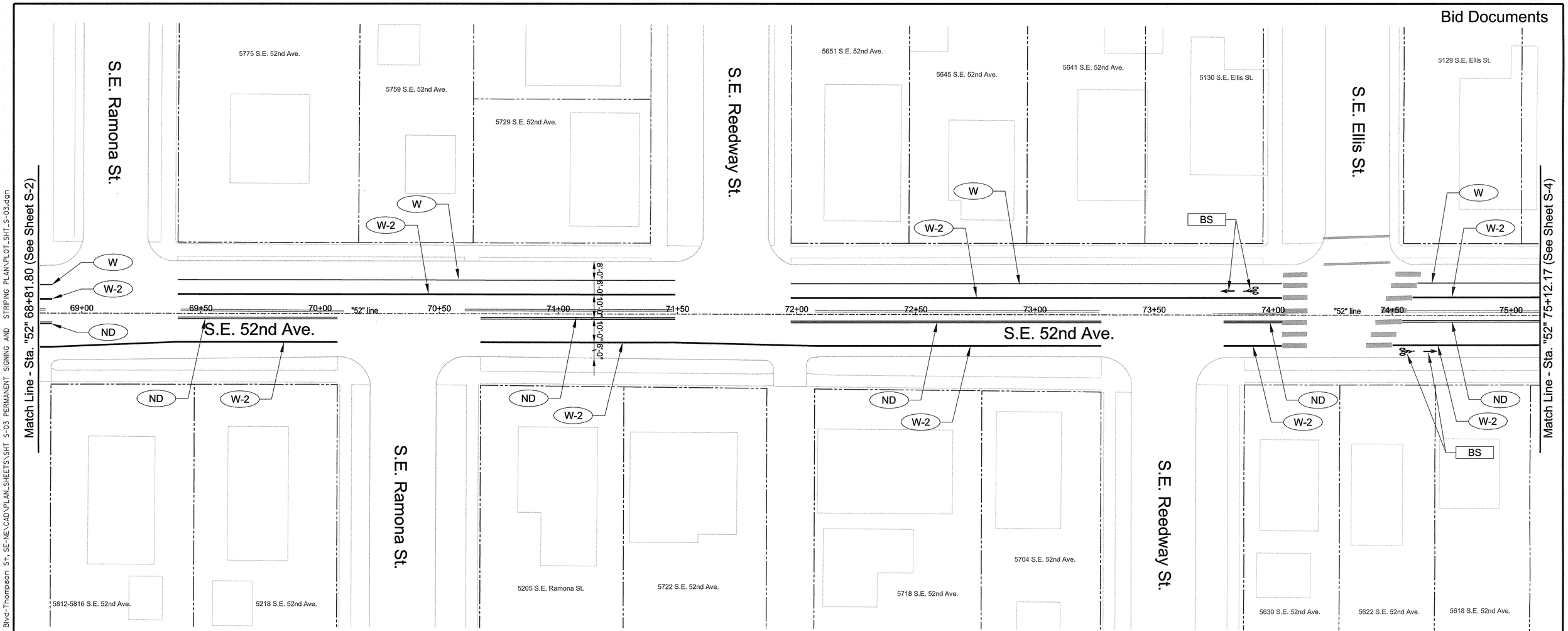

Signing Notes:

1.) Refer to traffic sign bubble and traffic sign number legends shown on sheets S-43 thru S-45.

2.) Refer to signing details shown on "P-" sheets.

3.) Contractor to coordinate with TriMet to relocate signs.

Striping Notes:

1.) Remove all conflicting striping and pavement markings.

2.) Refer to pavement marking standard detail blocks shown on "P-" sheets and "TM" sheets.

3.) All longitudinal line work to be paint except for W-2 turn lane markings.

4.) All W-2 turn lane markings to be non-profile, 120 mil., extruded thermoplastic.

5.) All S and CW transverse line work to be Type "A" thermoplastic.

6.) All legend, symbols, arrows and CW-SC transverse line work to be Type "B-HS" thermoplastic.

0 20 40 60 80
FEET

NO.	DATE	DESCRIPTION	APPD.

REVISION

DESIGNED BY A. Sullivan	DATE APPROVED Apr. 2013	
CAD BY D. Ramer C. Shearer		PROJECT NO. T00121
CHECKED BY J. Tower		1/4 SECTION 2836,2936,3036 3136,3236,3336 3436,3536,3636
PROJECT NUMBER STP-5900(246)		

REGISTERED PROFESSIONAL ENGINEER 16399PE OREGON JULY 10, 1993 LEWIS H. WARDRIP
Expires 6/30/14

APPROVALS:

SUPERVISING ENGINEER — REG. PROF. ENGR. NO. 16399PE

CITY ENGINEER — REG. PROF. ENGR. NO. 51538PE

CITY OF PORTLAND BUREAU OF TRANSPORTATION

CHARLIE HALES, MAYOR
STEVE TOWNSEN, P.E., CITY ENGINEER

CITY OF PORTLAND OREGON 1851

NE/SE 50s Bikeway: NE Thompson to SE Woodstock

MULTNOMAH COUNTY

Permanent Signing & Striping Plan
Sta. "52" 68+81.80 to
Sta. "52" 75+12.17

SHEET NO. S-3

Plot Date: 4/1/2013 1:37:15 PM Filename: S:_JL_Design\T00121- 50's Bikeway Woodstock Blvd-Thompson St, SE-NE\CAD\PLAN_SHEETS\SHT S-03 PERMANENT SIGNING AND STRIPING PLAN\PLOT_SHT_S-03.dgn

Bid Documents

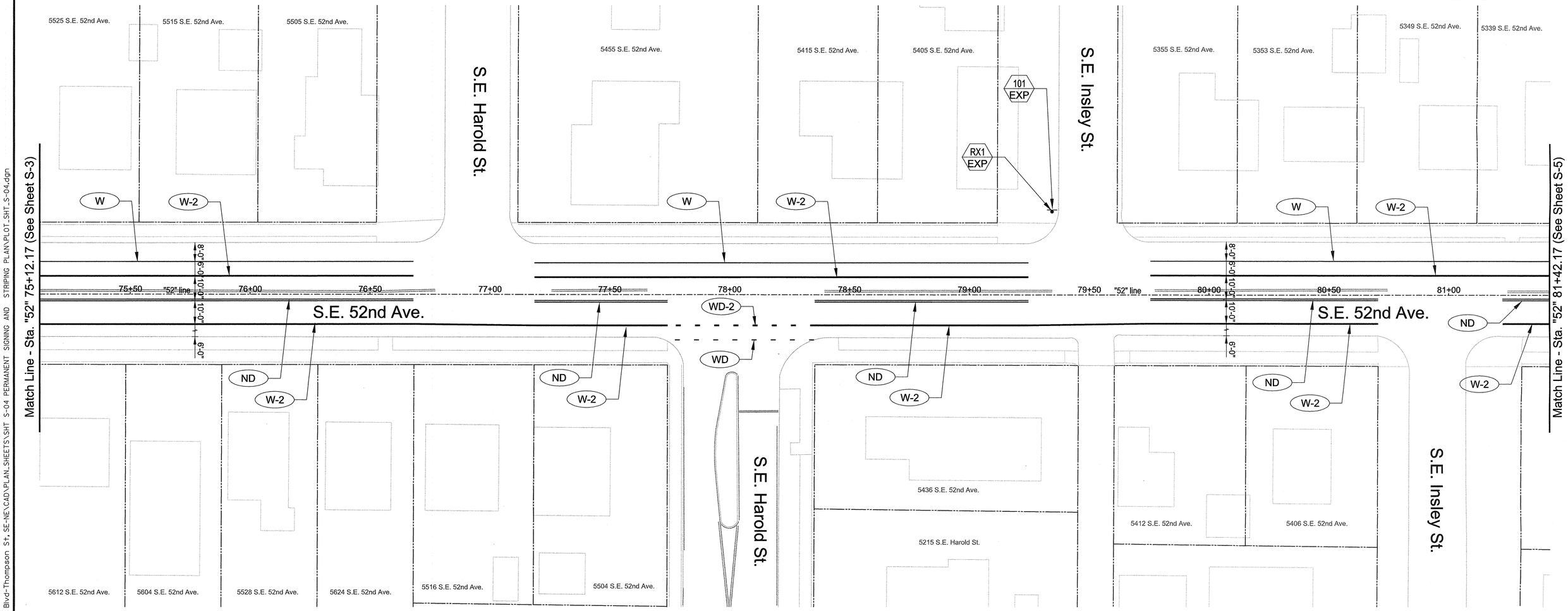

Signing Notes:

1.) Refer to traffic sign bubble and traffic sign number legends shown on sheets S-43 thru S-45.

2.) Refer to signing details shown on "P-" sheets.

3.) Contractor to coordinate with TriMet to relocate signs.

Striping Notes:

1.) Remove all conflicting striping and pavement markings.

2.) Refer to pavement marking standard detail blocks shown on "P-" sheets and "TM" sheets.

3.) All longitudinal line work to be paint except for W-2 turn lane markings.

4.) All W-2 turn lane markings to be non-profile, 120 mil., extruded thermoplastic.

5.) All S and CW transverse line work to be Type "A" thermoplastic.

6.) All legend, symbols, arrows and CW-SC transverse line work to be Type "B-HS" thermoplastic.

0 20 40 60 80
FEET

NO.	DATE	DESCRIPTION	APPD.
		REVISION	

DESIGNED BY A. Sullivan	DATE APPROVED Apr. 2013	
CAD BY D. Ramer C. Shearer		PROJECT NO. T00121
CHECKED BY J. Tower		T.I.A. SECTION 2836,2936,3036 3136,3236,3336 3436,3536,3636
PROJECT NUMBER STP-5900(246)		

REGISTERED PROFESSIONAL ENGINEER 16399PE OREGON JULY 10, 1993 LEWIS H. WARDRIP
Expires 6/30/14

APPROVALS:
SUPERVISING ENGINEER — REG. PROF. ENGR. NO. 16399PE
CITY ENGINEER — REG. PROF. ENGR. NO. 51538PE

CITY OF PORTLAND BUREAU OF TRANSPORTATION
CHARLIE HALES, MAYOR
STEVE TOWNSEN, P.E., CITY ENGINEER

NE/SE 50s Bikeway: NE Thompson to SE Woodstock
MULTNOMAH COUNTY

Permanent Signing & Striping Plan
Sta. "52" 75+12.17 to
Sta. "52" 81+42.17

SHEET NO. S-4

Plot Date: 4/1/2013 1:37:16 PM Filename: S:_IL_Design\T00121- 50's Bikeway Woodstock Blvd-Thompson St, SE-NE\CAD\PLAN_SHEETS\SHT S-04 PERMANENT SIGNING AND STRIPING PLAN\PLOT_SHT_S-04.dgn

Bid Documents

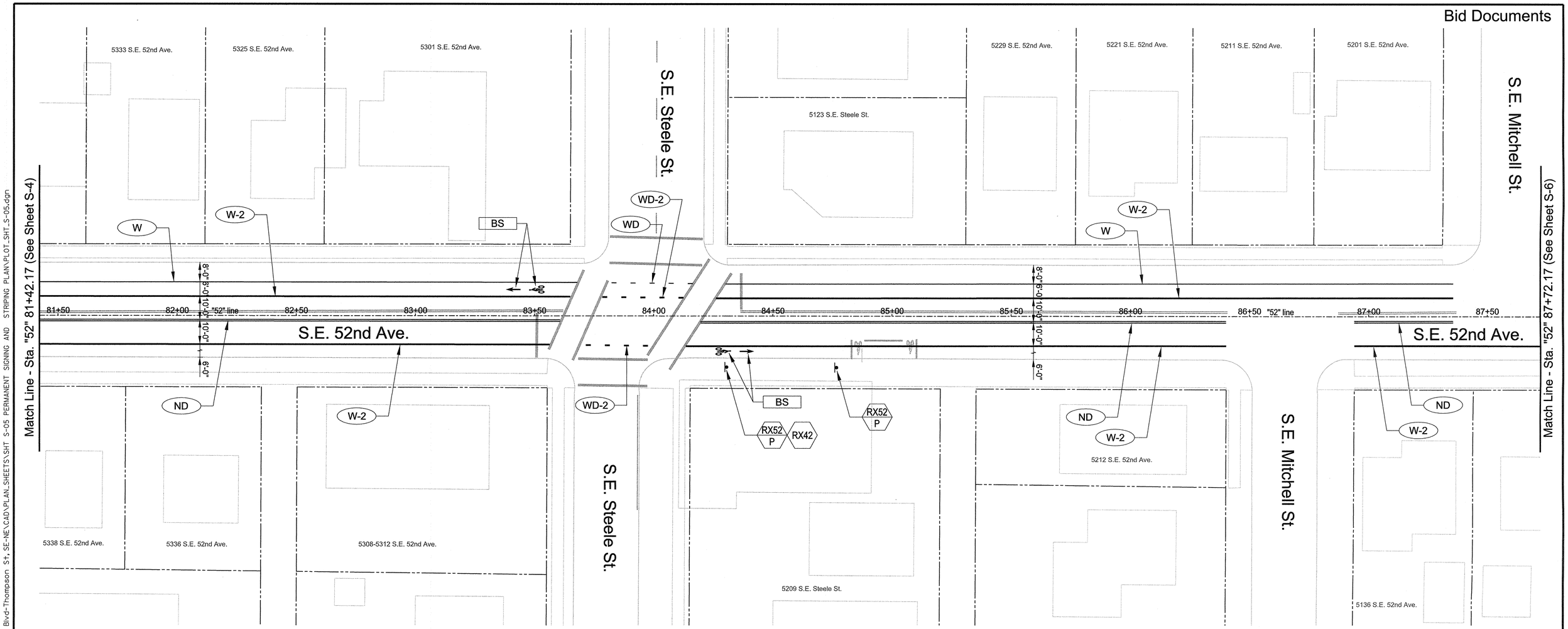

Signing Notes:

1.) Refer to traffic sign bubble and traffic sign number legends shown on sheets S-43 thru S-45.

2.) Refer to signing details shown on "P-" sheets.

3.) Contractor to coordinate with TriMet to relocate signs.

Striping Notes:

1.) Remove all conflicting striping and pavement markings.

2.) Refer to pavement marking standard detail blocks shown on "P-" sheets and "TM" sheets.

3.) All longitudinal line work to be paint except for W-2 turn lane markings.

4.) All W-2 turn lane markings to be non-profile, 120 mil., extruded thermoplastic.

5.) All S and CW transverse line work to be Type "A" thermoplastic.

6.) All legend, symbols, arrows and CW-SC transverse line work to be Type "B-HS" thermoplastic.

0 20 40 60 80
FEET

NO.	DATE	DESCRIPTION	APPD.
		REVISION	

DESIGNED BY A. Sullivan	DATE APPROVED Apr. 2013	
CAD BY D. Ramer C. Shearer		PROJECT NO. T00121
CHECKED BY J. Tower		1/4 SECTION 2836,2936,3036 3136,3236,3336 3436,3536,3636
PROJECT NUMBER STP-5900(246)		

REGISTERED PROFESSIONAL ENGINEER 16399PE OREGON JULY 10, 1993 LEWIS H. WARDRIP
Expires 6/30/14

APPROVALS:

SUPERVISING ENGINEER — REG. PROF. ENGR. NO. 16399PE

CITY ENGINEER — REG. PROF. ENGR. NO. 51538PE

CITY OF PORTLAND BUREAU OF TRANSPORTATION

CHARLIE HALES, MAYOR
STEVE TOWNSEN, P.E., CITY ENGINEER

CITY OF PORTLAND, OREGON 1851

NE/SE 50s Bikeway: NE Thompson to SE Woodstock

MULTNOMAH COUNTY

Permanent Signing & Striping Plan Sta. "52" 81+42.17 to Sta. "52" 87+72.17

SHEET NO. S-5

Plot Date: 4/1/2013 1:37:17 PM Filename: S:_II_Design\T00121- 50's Bikeway Woodstock Blvd-Thompson St, SE-NE\CAD\PLAN_SHEETS\SHT S-05 PERMANENT SIGNING AND STRIPING PLAN\PLOT_SHT_S-05.dgn

Bid Documents

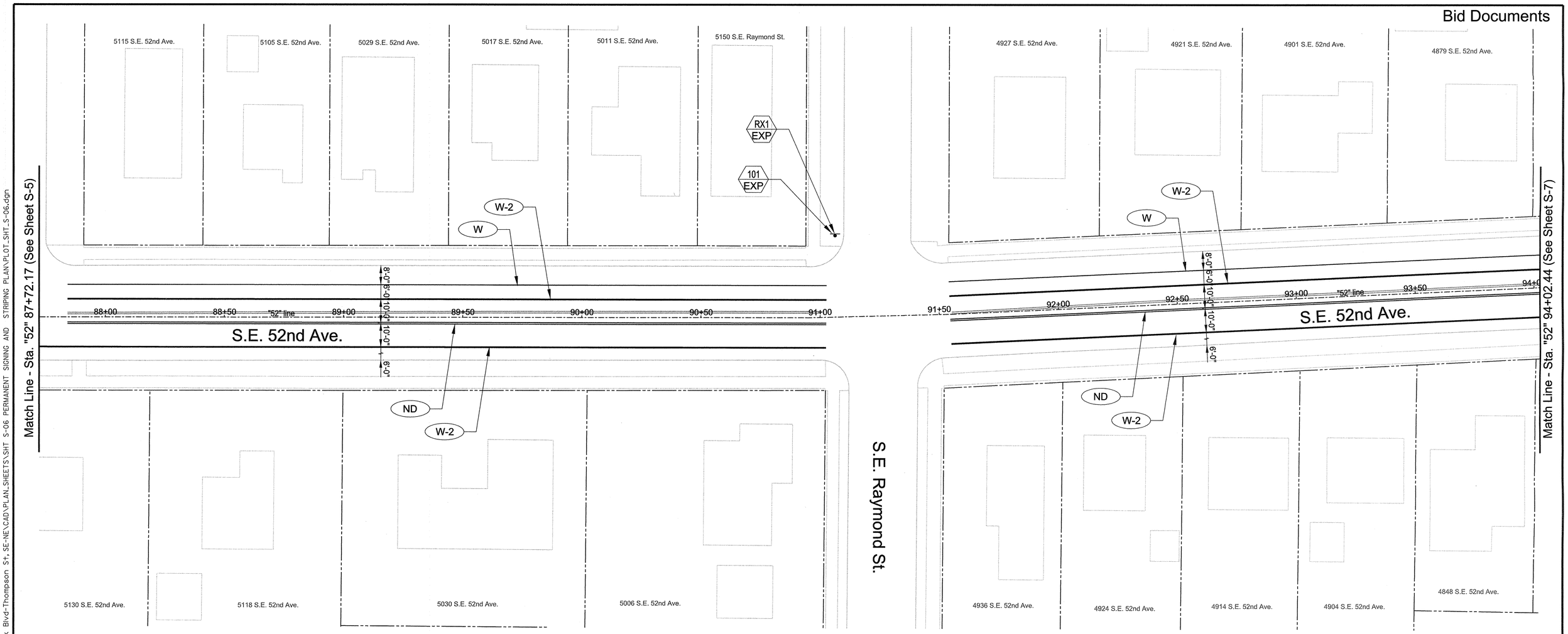

Signing Notes:

1.) Refer to traffic sign bubble and traffic sign number legends shown on sheets S-43 thru S-45.

2.) Refer to signing details shown on "P-" sheets.

3.) Contractor to coordinate with TriMet to relocate signs.

Striping Notes:

1.) Remove all conflicting striping and pavement markings.

2.) Refer to pavement marking standard detail blocks shown on "P-" sheets and "TM" sheets.

3.) All longitudinal line work to be paint except for W-2 turn lane markings.

4.) All W-2 turn lane markings to be non-profile, 120 mil., extruded thermoplastic.

5.) All S and CW transverse line work to be Type "A" thermoplastic.

6.) All legend, symbols, arrows and CW-SC transverse line work to be Type "B-HS" thermoplastic.

0 20 40 60 80
FEET

NO.	DATE	DESCRIPTION	APPD.
		REVISION	

DESIGNED BY	DATE APPROVED	
A. Sullivan	Apr. 2013	
CAD BY D. Ramer C. Shearer		PROJECT NO. T00121
CHECKED BY J. Tower		1/4 SECTION 2836,2936,3036 3136,3236,3336 3436,3536,3636
PROJECT NUMBER STP-5900(246)		

REGISTERED PROFESSIONAL ENGINEER 16399PE OREGON JULY 10, 1993 LEWIS H. WARDRIP
Expires 6/30/14

APPROVALS:
SUPERVISING ENGINEER — REG. PROF. ENGR. NO. 16399PE
CITY ENGINEER — REG. PROF. ENGR. NO. 51538PE

CITY OF PORTLAND BUREAU OF TRANSPORTATION
CHARLIE HALES, MAYOR
STEVE TOWNSEN, P.E., CITY ENGINEER

NE/SE 50s Bikeway: NE Thompson to SE Woodstock
MULTNOMAH COUNTY
Permanent Signing & Striping Plan
Sta. "52" 81+72.17 to
Sta. "52" 94+02.44
SHEET NO. S-6

Plot Date: 4/1/2013 1:37:18 PM Filename: S:_II_Design\T00121 - 50's Bikeway Woodstock Blvd-Thompson St, SE-NE\CAD\PLAN_SHEETS\SHT S-06 PERMANENT SIGNING AND STRIPING PLAN\PLOT_SHT_S-06.dgn

Bid Documents

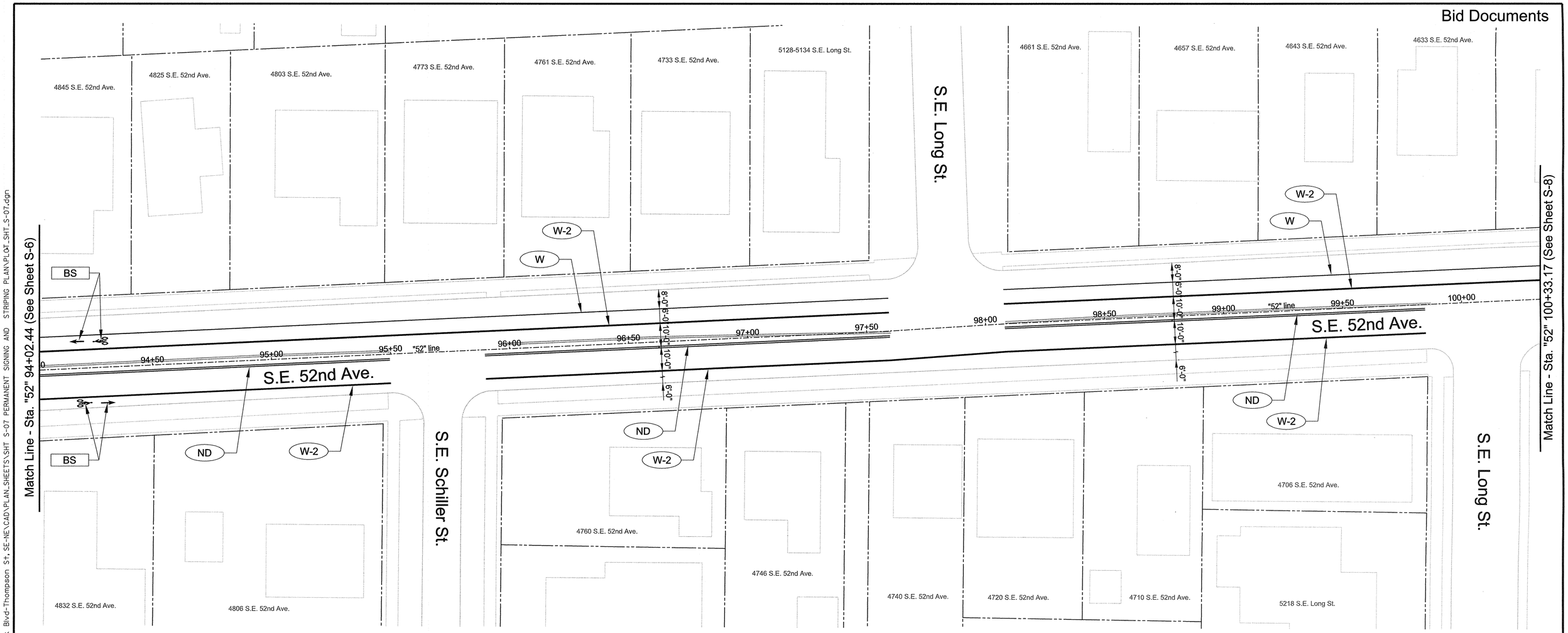

Signing Notes:

1.) Refer to traffic sign bubble and traffic sign number legends shown on sheets S-43 thru S-45.

2.) Refer to signing details shown on "P-" sheets.

3.) Contractor to coordinate with TriMet to relocate signs.

Striping Notes:

1.) Remove all conflicting striping and pavement markings.

2.) Refer to pavement marking standard detail blocks shown on "P-" sheets and "TM" sheets.

3.) All longitudinal line work to be paint except for W-2 turn lane markings.

4.) All W-2 turn lane markings to be non-profile, 120 mil., extruded thermoplastic.

5.) All S and CW transverse line work to be Type "A" thermoplastic.

6.) All legend, symbols, arrows and CW-SC transverse line work to be Type "B-HS" thermoplastic.

0 20 40 60 80
FEET

NO.	DATE	DESCRIPTION	APPD.
		REVISION	

DESIGNED BY A. Sullivan	DATE APPROVED Apr. 2013	
CAD BY D. Ramer C. Shearer		PROJECT NO. T00121
CHECKED BY J. Tower		T/A SECTION 2836,2936,3036 3136,3236,3336 3436,3536,3636
PROJECT NUMBER STP-5900(246)		

REGISTERED PROFESSIONAL ENGINEER 16399PE OREGON JULY 10, 1993 LEWIS H. WARDRIP
Expires 6/30/14

APPROVALS:

SUPERVISING ENGINEER — REG. PROF. ENGR. NO. 16399PE

CITY ENGINEER — REG. PROF. ENGR. NO. 51538PE

CITY OF PORTLAND BUREAU OF TRANSPORTATION

CHARLIE HALES, MAYOR
STEVE TOWNSEN, P.E., CITY ENGINEER

NE/SE 50s Bikeway: NE Thompson to SE Woodstock

MULTNOMAH COUNTY

Permanent Signing & Striping Plan
Sta. "52" 94+02.44 to
Sta. "52" 100+33.17

SHEET NO. S-7

Plot Date: 4/1/2013 1:37:20 PM Filename: S:_IL_Design\T00121- 50's Bikeway Woodstock Blvd-Thompson St. SE-NE\CAD\PLAN-SHEETS\SHT S-07 PERMANENT SIGNING AND STRIPING PLAN\PLOT_SHT_S-07.dgn

Bid Documents

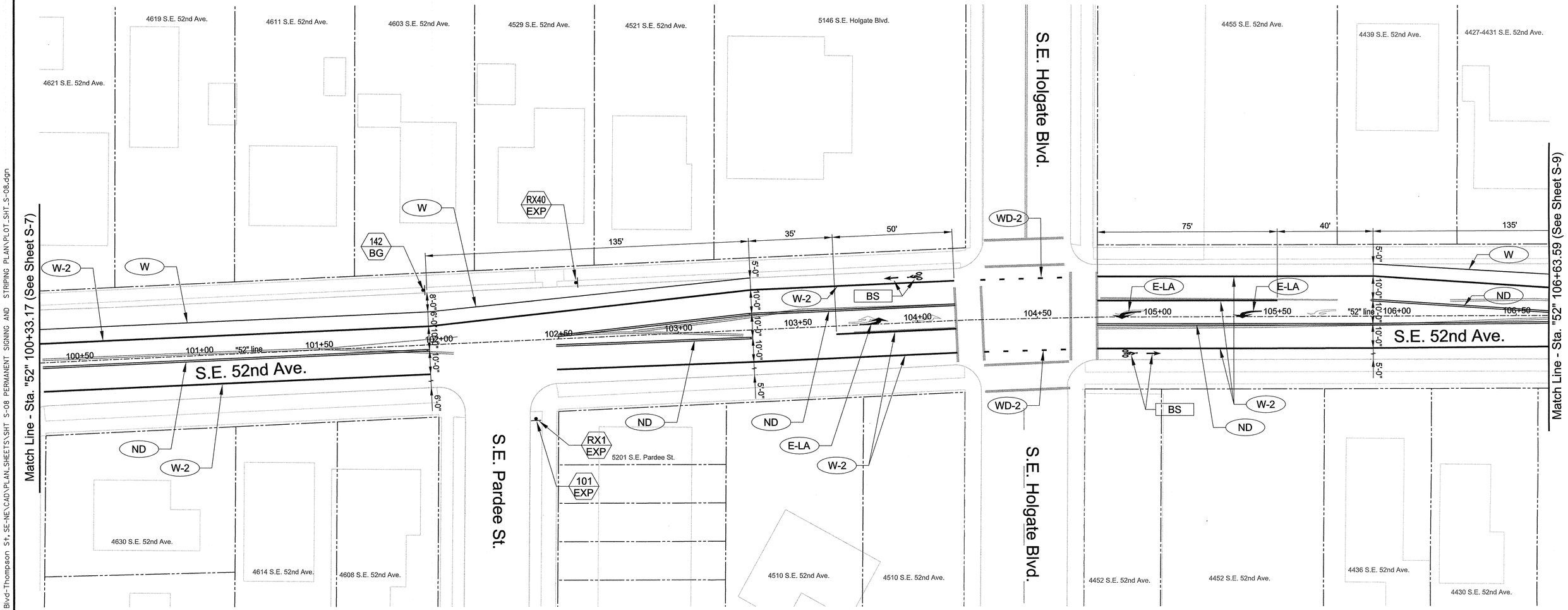

Signing Notes:

1.) Refer to traffic sign bubble and traffic sign number legends shown on sheets S-43 thru S-45.

2.) Refer to signing details shown on "P-" sheets.

3.) Contractor to coordinate with TriMet to relocate signs.

Striping Notes:

1.) Remove all conflicting striping and pavement markings.

2.) Refer to pavement marking standard detail blocks shown on "P-" sheets and "TM" sheets.

3.) All longitudinal line work to be paint except for W-2 turn lane markings.

4.) All W-2 turn lane markings to be non-profile, 120 mil., extruded thermoplastic.

5.) All S and CW transverse line work to be Type "A" thermoplastic.

6.) All legend, symbols, arrows and CW-SC transverse line work to be Type "B-HS" thermoplastic.

0 20 40 60 80
FEET

NO.	DATE	DESCRIPTION	APPD.

REVISION

DESIGNED BY A. Sullivan	DATE APPROVED Apr. 2013	
CAD BY D. Ramer C. Shearer		PROJECT NO. T00121
CHECKED BY J. Tower		T/4 SECTION 2836,2936,3036 3136,3236,3336 3436,3536,3636
PROJECT NUMBER STP-5900(246)		

REGISTERED PROFESSIONAL ENGINEER 16399PE OREGON JULY 10, 1993 LEWIS H. WARDRIP
Expires 6/30/14

APPROVALS:

SUPERVISING ENGINEER — REG. PROF. ENGR. NO. 16399PE

CITY ENGINEER — REG. PROF. ENGR. NO. 51538PE

CITY OF PORTLAND BUREAU OF TRANSPORTATION

CHARLIE HALES, MAYOR
STEVE TOWNSEN, P.E., CITY ENGINEER

NE/SE 50s Bikeway: NE Thompson to SE Woodstock

MULTNOMAH COUNTY

Permanent Signing & Striping Plan
Sta. "52" 100+33.17 to
Sta. "52" 106+63.59

SHEET NO. S-8

Plot Date: 4/1/2013 1:37:21PM Filename: S:_IL_Design\T00121- 50's Bikeway Woodstock Blvd-Thompson St, SE-NE\CAD\PLAN_SHEETS\SHT S-08 PERMANENT SIGNING AND STRIPING PLAN\PLOT_SHT_S-08.dgn

Bid Documents

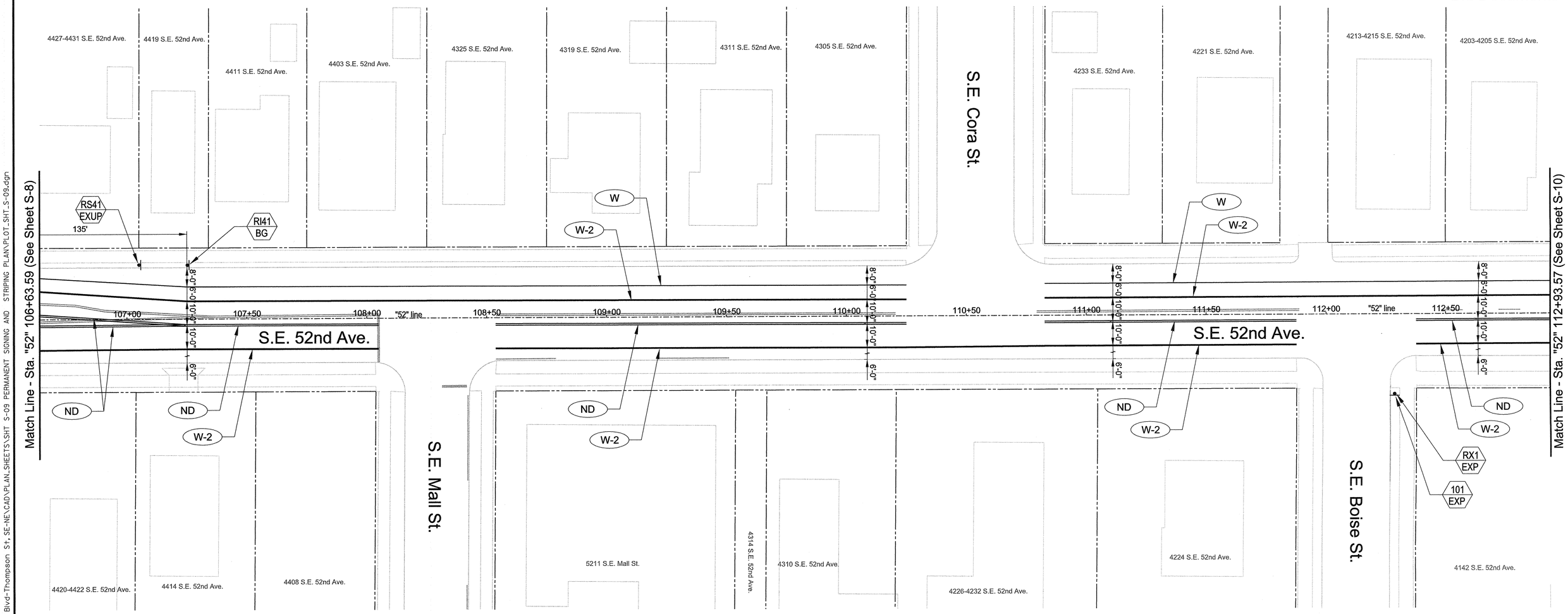

Signing Notes:

1.) Refer to traffic sign bubble and traffic sign number legends shown on sheets S-43 thru S-45.

2.) Refer to signing details shown on "P-" sheets.

3.) Contractor to coordinate with TriMet to relocate signs.

Striping Notes:

1.) Remove all conflicting striping and pavement markings.

2.) Refer to pavement marking standard detail blocks shown on "P-" sheets and "TM" sheets.

3.) All longitudinal line work to be paint except for W-2 turn lane markings.

4.) All W-2 turn lane markings to be non-profile, 120 mil., extruded thermoplastic.

5.) All S and CW transverse line work to be Type "A" thermoplastic.

6.) All legend, symbols, arrows and CW-SC transverse line work to be Type "B-HS" thermoplastic.

0 20 40 60 80
FEET

NO.	DATE	DESCRIPTION	APPD.
		REVISION	

DESIGNED BY A. Sullivan	DATE APPROVED Apr. 2013	
CAD BY D. Ramer C. Shearer		PROJECT NO. T00121
CHECKED BY J. Tower		1/4 SECTION 2836,2936,3036 3136,3236,3336 3436,3536,3636
PROJECT NUMBER STP-5900(246)		

REGISTERED PROFESSIONAL ENGINEER 16399PE OREGON JULY 10, 1993 LEWIS H. WARDRIP
Expires 6/30/14

APPROVALS:

SUPERVISING ENGINEER — REG. PROF. ENGR. NO. 16399PE

CITY ENGINEER — REG. PROF. ENGR. NO. 51538PE

CITY OF PORTLAND BUREAU OF TRANSPORTATION

CHARLIE HALES, MAYOR
STEVE TOWNSEN, P.E., CITY ENGINEER

NE/SE 50s Bikeway: NE Thompson to SE Woodstock

MULTNOMAH COUNTY

Permanent Signing & Striping Plan
Sta. "52" 106+63.59 to
Sta. "52" 112+93.57

SHEET NO. S-9

Plot Date: 4/1/2013 1:37:22 PM Filename: St_Il_Design\T00121- 50's Bikeway Woodstock Blvd-Thompson St, SE-NE\CAD\PLAN_SHEETS\SHT S-09 PERMANENT SIGNING AND STRIPING PLAN\PLOT_SHT_S-09.dgn

Bid Documents

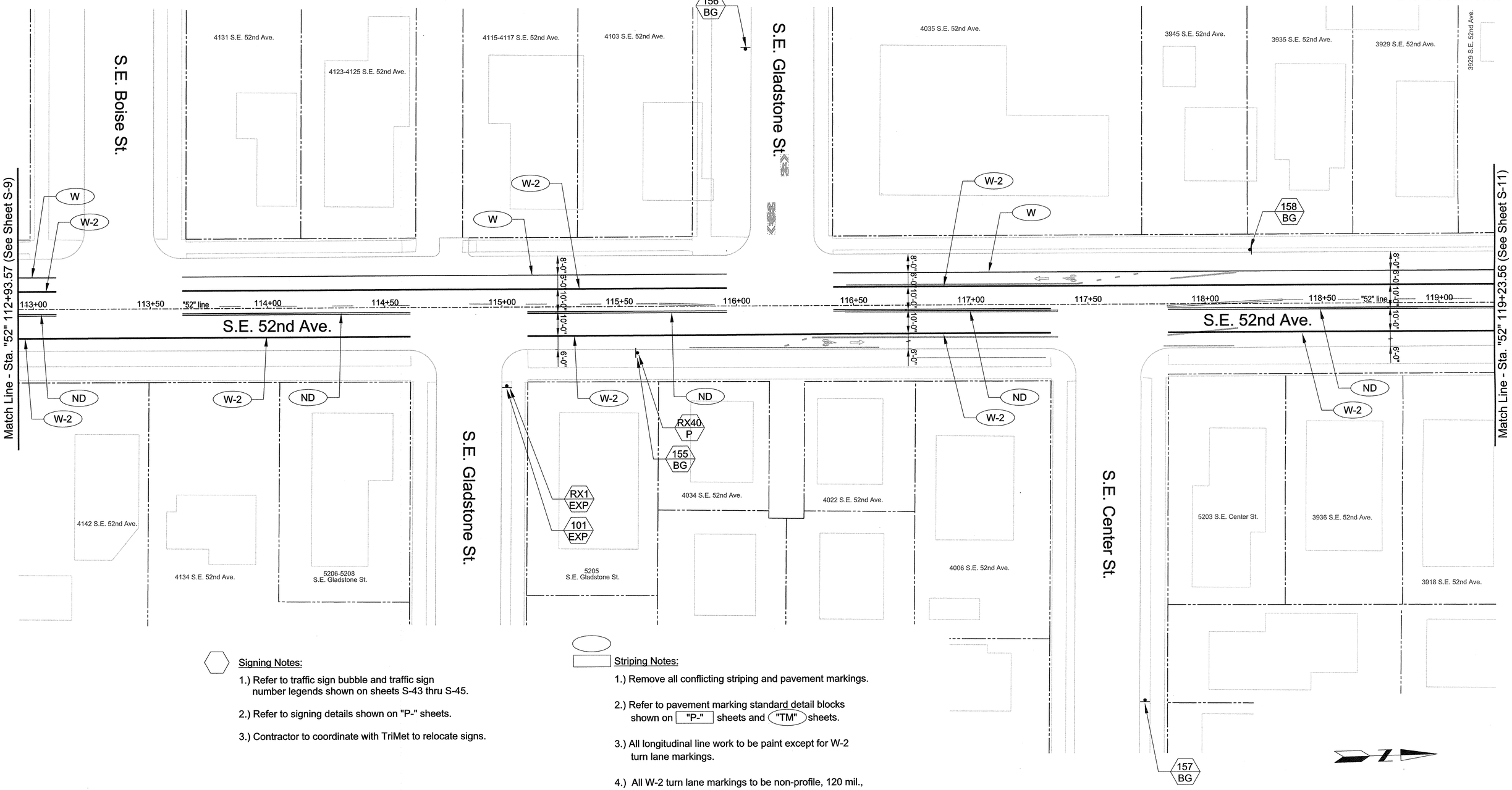

Signing Notes:

1.) Refer to traffic sign bubble and traffic sign number legends shown on sheets S-43 thru S-45.

2.) Refer to signing details shown on "P-" sheets.

3.) Contractor to coordinate with TriMet to relocate signs.

Striping Notes:

1.) Remove all conflicting striping and pavement markings.

2.) Refer to pavement marking standard detail blocks shown on "P-" sheets and "TM" sheets.

3.) All longitudinal line work to be paint except for W-2 turn lane markings.

4.) All W-2 turn lane markings to be non-profile, 120 mil., extruded thermoplastic.

5.) All S and CW transverse line work to be Type "A" thermoplastic.

6.) All legend, symbols, arrows and CW-SC transverse line work to be Type "B-HS" thermoplastic.

NO.	DATE	DESCRIPTION	APPD.

REVISION

DESIGNED BY A. Sullivan	DATE APPROVED Apr. 2013	
CAD BY D. Ramer C. Shearer		PROJECT NO. T00121
CHECKED BY J. Tower		1/4 SECTION 2836,2936,3036, 3136,3236,3336, 3436,3536,3636
PROJECT NUMBER STP-5900(246)		

REGISTERED PROFESSIONAL ENGINEER 16399PE OREGON JULY 10, 1993 LEWIS H. WARDRIP
Expires 6/30/14

APPROVALS:

SUPERVISING ENGINEER — REG. PROF. ENGR. NO. 16399PE

CITY ENGINEER — REG. PROF. ENGR. NO. 51538PE

CITY OF PORTLAND BUREAU OF TRANSPORTATION

CHARLIE HALES, MAYOR
STEVE TOWNSEN, P.E., CITY ENGINEER

CITY OF PORTLAND, OREGON 1851

NE/SE 50s Bikeway: NE Thompson to SE Woodstock

MULTNOMAH COUNTY

Permanent Signing & Striping Plan
Sta. "52" 112+93.57 to
Sta. "52" 119+23.56

SHEET NO. S-10

Plot Date: 4/1/2013 1:37:23 PM Filename: S:_IL_Design\T00121- 50's Bikeway Woodstock Blvd-Thompson St, SE-NE\CAD\PLAN_SHEETS\SHT S-10 PERMANENT SIGNING AND STRIPING PLAN\PLOT_SHT_S-10.dgn

Bid Documents

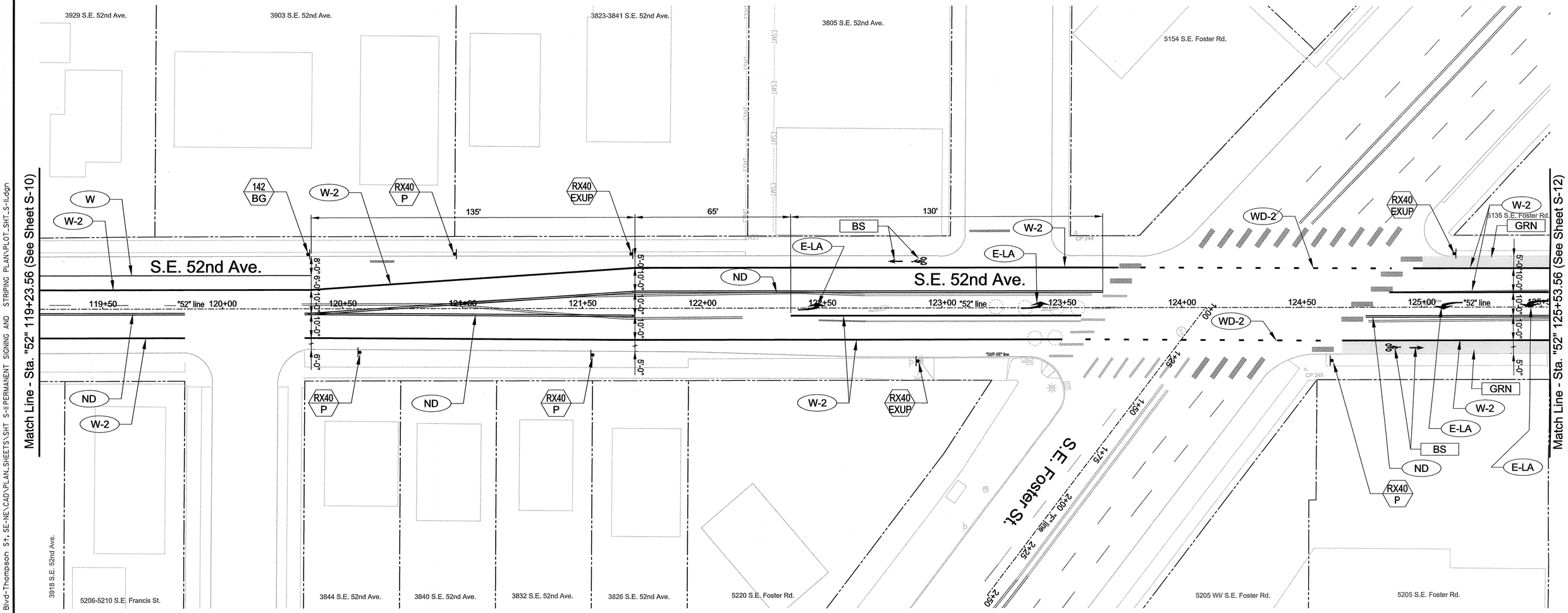

Signing Notes:

1.) Refer to traffic sign bubble and traffic sign number legends shown on sheets S-43 thru S-45.

2.) Refer to signing details shown on "P-" sheets.

3.) Contractor to coordinate with TriMet to relocate signs.

Striping Notes:

1.) Remove all conflicting striping and pavement markings.

2.) Refer to pavement marking standard detail blocks shown on "P-" sheets and "TM" sheets.

3.) All longitudinal line work to be paint except for W-2 turn lane markings.

4.) All W-2 turn lane markings to be non-profile, 120 mil., extruded thermoplastic.

5.) All S and CW transverse line work to be Type "A" thermoplastic.

6.) All legend, symbols, arrows and CW-SC transverse line work to be Type "B-HS" thermoplastic.

7.) GRN Green pavement markings to be Type "E" paint and from "Pantone" color palette #375.

0 20 40 60 80
FEET

NO.	DATE	DESCRIPTION	APPD.

REVISION

DESIGNED BY A. Sullivan	DATE APPROVED Apr. 2013	
CAD BY D. Ramer C. Shearer		PROJECT NO. T00121
CHECKED BY J. Tower		1/4 SECTION 2836,2936,3036 3136,3236,3336 3436,3536,3636
PROJECT NUMBER STP-5900(246)		

REGISTERED PROFESSIONAL ENGINEER 16399PE OREGON JULY 10, 1993 LEWIS H. WARDRIP
Expires 6/30/14

APPROVALS:

SUPERVISING ENGINEER — REG. PROF. ENGR. NO. 16399PE

CITY ENGINEER — REG. PROF. ENGR. NO. 51538PE

CITY OF PORTLAND BUREAU OF TRANSPORTATION

CHARLIE HALES, MAYOR
STEVE TOWNSEN, P.E., CITY ENGINEER

NE/SE 50s Bikeway: NE Thompson to SE Woodstock

MULTNOMAH COUNTY

Permanent Signing & Striping Plan
Sta. "52" 119+23.56 to
Sta. "52" 125+53.56

SHEET NO. S-11

Plot Date: 4/1/2013 1:37:24 PM Filename: S:_IL_Design\T00121 - 50's Bikeway Woodstock Blvd-Thompson St, SE-NE\CAD\PLAN_SHEETS\SHT S-11PERMANENT SIGNING AND STRIPING PLAN\PLOT_SHT_S-11.dgn

Bid Documents

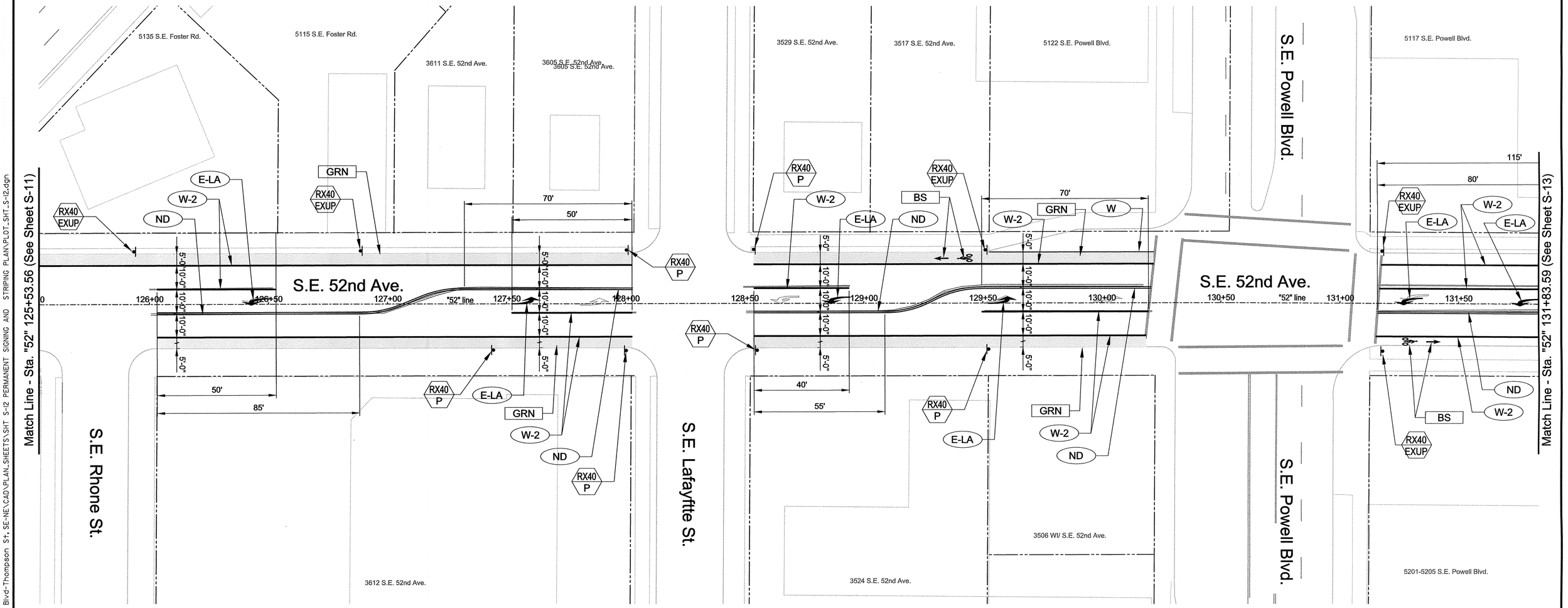

Signing Notes:

1.) Refer to traffic sign bubble and traffic sign number legends shown on sheets S-43 thru S-45.

2.) Refer to signing details shown on "P-" sheets.

3.) Contractor to coordinate with TriMet to relocate signs.

Striping Notes:

1.) Remove all conflicting striping and pavement markings.

2.) Refer to pavement marking standard detail blocks shown on "P-" sheets and "TM" sheets.

3.) All longitudinal line work to be paint except for W-2 turn lane markings.

4.) All W-2 turn lane markings to be non-profile, 120 mil., extruded thermoplastic.

5.) All S and CW transverse line work to be Type "A" thermoplastic.

6.) All legend, symbols, arrows and CW-SC transverse line work to be Type "B-HS" thermoplastic.

7.) GRN Green pavement markings to be Type "E" paint and from "Pantone" color palette #375.

0 20 40 60 80
FEET

NO.	DATE	DESCRIPTION	APPD.

REVISION

DESIGNED BY A. Sullivan	DATE APPROVED Apr. 2013	
CAD BY D. Ramer C. Shearer		PROJECT NO. T00121
CHECKED BY J. Tower		1/4 SECTION 2836,2936,3036 3136,3236,3336 3436,3536,3636
PROJECT NUMBER STP-5900(246)		

REGISTERED PROFESSIONAL ENGINEER 16399PE OREGON JULY 10, 1993 LEWIS H. WARDRIP
Expires 6/30/14

APPROVALS:

SUPERVISING ENGINEER — REG. PROF. ENGR. NO. 16399PE

CITY ENGINEER — REG. PROF. ENGR. NO. 51538PE

CITY OF PORTLAND BUREAU OF TRANSPORTATION

CHARLIE HALES, MAYOR
STEVE TOWNSEN, P.E., CITY ENGINEER

CITY OF PORTLAND OREGON 1851

NE/SE 50s Bikeway: NE Thompson to SE Woodstock

MULTNOMAH COUNTY

Permanent Signing & Striping Plan Sta. "52" 125+53.56 to Sta. "52" 131+83.59

SHEET NO. S-12

Plot Date: 4/1/2013 1:37:25 PM Filename: S:_JL_Design\T00121- 50's Bikeway Woodstock Blvd-Thompson St, SE-NE\CAD\PLAN_SHEETS\SHT S-12 PERMANENT SIGNING AND STRIPING PLAN\PLOT_SHT_S-12.dgn

Bid Documents

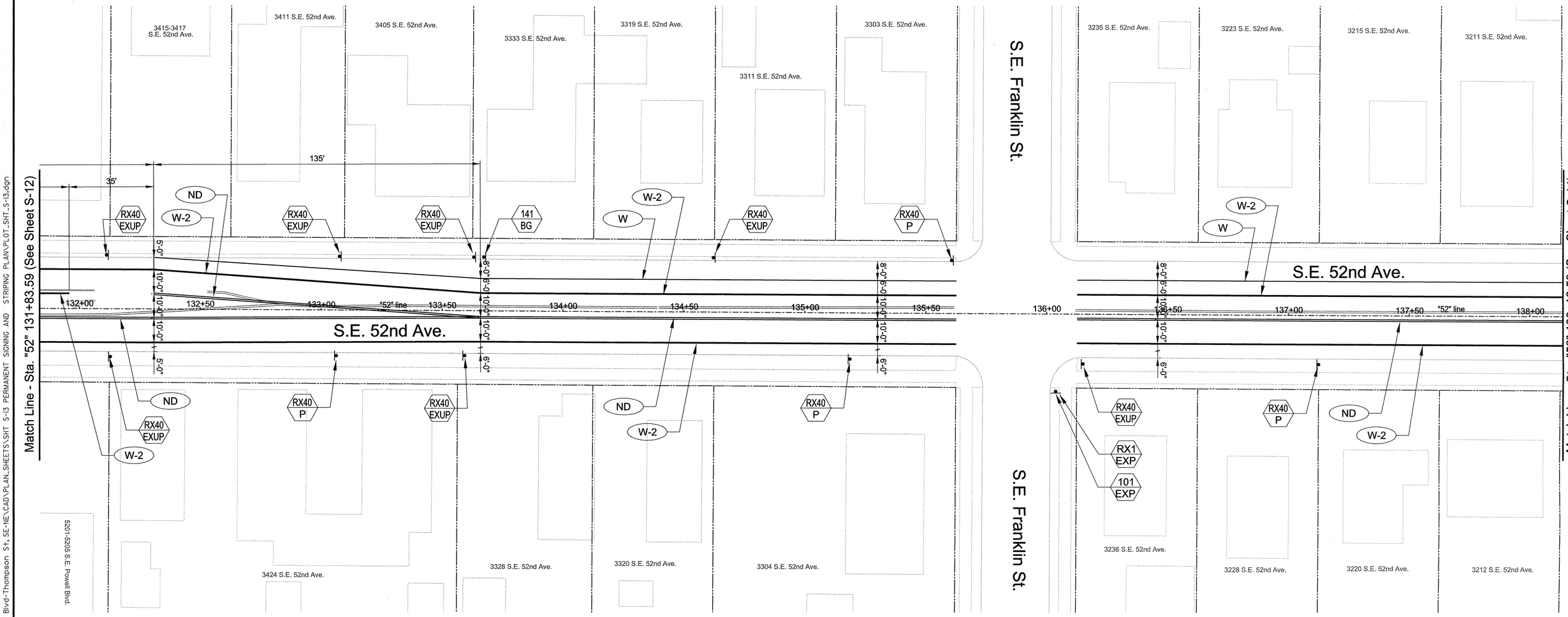

Signing Notes:

1.) Refer to traffic sign bubble and traffic sign number legends shown on sheets S-43 thru S-45.

2.) Refer to signing details shown on "P-" sheets.

3.) Contractor to coordinate with TriMet to relocate signs.

Striping Notes:

1.) Remove all conflicting striping and pavement markings.

2.) Refer to pavement marking standard detail blocks shown on "P-" sheets and "TM" sheets.

3.) All longitudinal line work to be paint except for W-2 turn lane markings.

4.) All W-2 turn lane markings to be non-profile, 120 mil., extruded thermoplastic.

5.) All S and CW transverse line work to be Type "A" thermoplastic.

6.) All legend, symbols, arrows and CW-SC transverse line work to be Type "B-HS" thermoplastic.

0 20 40 60 80
FEET

NO.	DATE	DESCRIPTION	APPD.

REVISION

DESIGNED BY	DATE APPROVED	
A. Sullivan	Apr. 2013	
CAD BY D. Ramer C. Shearer		PROJECT NO. T00121
CHECKED BY J. Tower		1/4 SECTION 2836,2936,3036 3136,3236,3336 3436,3536,3636

PROJECT NUMBER STP-5900(246)

REGISTERED PROFESSIONAL ENGINEER 16399PE OREGON JULY 10, 1983 LEWIS H. WARDRIP
Expires 6/30/14

APPROVALS:

SUPERVISING ENGINEER — REG. PROF. ENGR. NO. 16399PE

CITY ENGINEER — REG. PROF. ENGR. NO. 51538PE

CITY OF PORTLAND BUREAU OF TRANSPORTATION

CHARLIE HALES, MAYOR
STEVE TOWNSEN, P.E., CITY ENGINEER

CITY OF PORTLAND, OREGON 1851

NE/SE 50s Bikeway: NE Thompson to SE Woodstock

MULTNOMAH COUNTY

Permanent Signing & Striping Plan
Sta. "52" 131+83.59 to
Sta. "52" 138+13.58

SHEET NO. S-13

Plot Date: 4/1/2013 1:37:26 PM Filename: S:_ll_Design\T00121 - 50's Bikeway Woodstock Blvd-Thompson St, SE-NE\CAD\PLAN_SHEETS\SHT S-13 PERMANENT SIGNING AND STRIPING PLAN\PLOT_SHT_S-13.dgn

Bid Documents

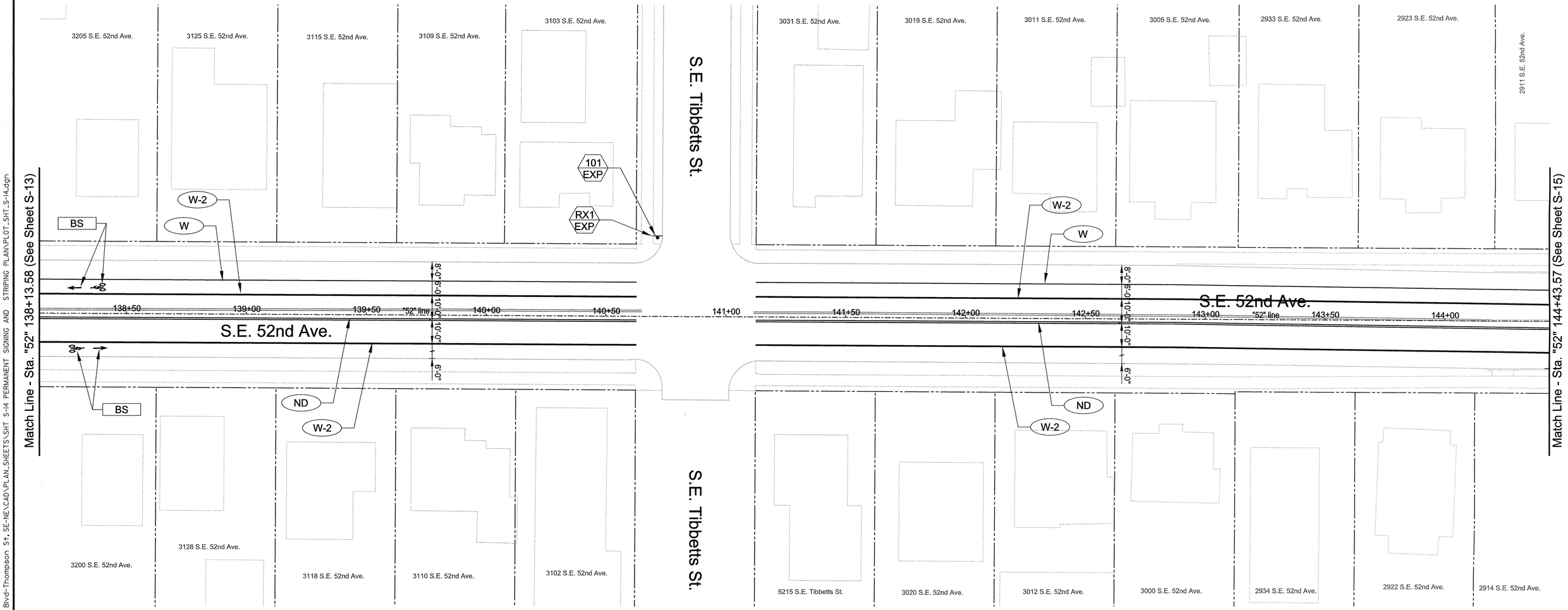

Signing Notes:

1.) Refer to traffic sign bubble and traffic sign number legends shown on sheets S-43 thru S-45.

2.) Refer to signing details shown on "P-" sheets.

3.) Contractor to coordinate with TriMet to relocate signs.

Striping Notes:

1.) Remove all conflicting striping and pavement markings.

2.) Refer to pavement marking standard detail blocks shown on "P-" sheets and "TM" sheets.

3.) All longitudinal line work to be paint except for W-2 turn lane markings.

4.) All W-2 turn lane markings to be non-profile, 120 mil., extruded thermoplastic.

5.) All S and CW transverse line work to be Type "A" thermoplastic.

6.) All legend, symbols, arrows and CW-SC transverse line work to be Type "B-HS" thermoplastic.

0 20 40 60 80
FEET

NO.	DATE	DESCRIPTION	APPD.
		REVISION	

DESIGNED BY A. Sullivan	DATE APPROVED Apr. 2013	
CAD BY D. Ramer C. Shearer		PROJECT NO. T00121
CHECKED BY J. Tower		T/4 SECTION 2836,2936,3036 3136,3236,3336 3436,3536,3636
PROJECT NUMBER STP-5900(246)		

REGISTERED PROFESSIONAL ENGINEER 16399PE OREGON JULY 10, 1993 LEWIS H. WARDRIP
Expires 6/30/14

APPROVALS:

SUPERVISING ENGINEER — REG. PROF. ENGR. NO. 16399PE

CITY ENGINEER — REG. PROF. ENGR. NO. 51538PE

CITY OF PORTLAND BUREAU OF TRANSPORTATION

CHARLIE HALES, MAYOR
STEVE TOWNSEN, P.E., CITY ENGINEER

NE/SE 50s Bikeway: NE Thompson to SE Woodstock

MULTNOMAH COUNTY

Permanent Signing & Striping Plan
Sta. "52" 138+13.58 to
Sta. "52" 144+43.57

SHEET NO. S-14

Plot Date: 4/1/2013 1:37:27 PM Filename: S:_IL_Design\T00121- 50's Bikeway Woodstock Blvd-Thompson St, SE-NE\CAD\PLAN_SHEETS\SHT S-14 PERMANENT SIGNING AND STRIPING PLAN\PLOT_SHT_S-14.dgn

Bid Documents

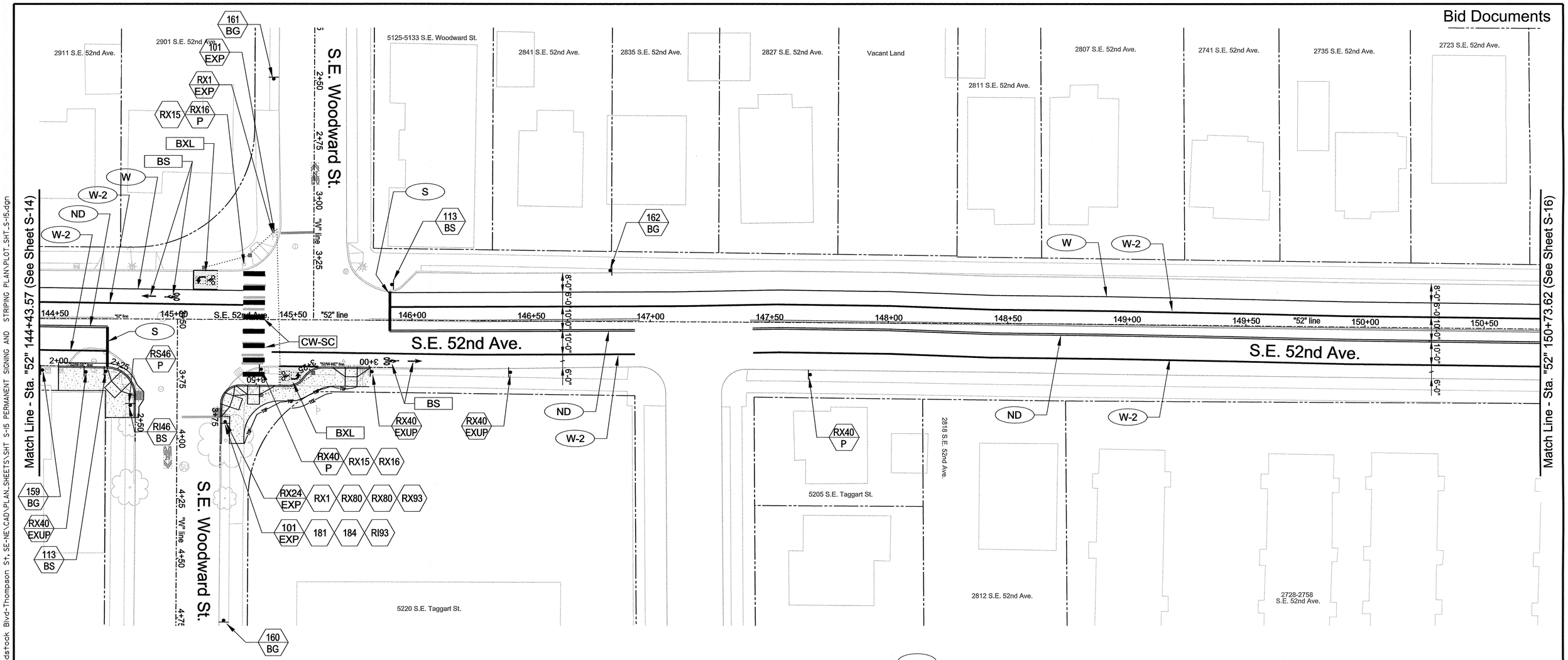

Signing Notes:

1.) Refer to traffic sign bubble and traffic sign number legends shown on sheets S-43 thru S-45.

2.) Refer to signing details shown on "P-" sheets.

3.) Contractor to coordinate with TriMet to relocate signs.

Striping Notes:

1.) Remove all conflicting striping and pavement markings.

2.) Refer to pavement marking standard detail blocks shown on "P-" sheets and "TM" sheets.

3.) All longitudinal line work to be paint except for W-2 turn lane markings.

4.) All W-2 turn lane markings to be non-profile, 120 mil., extruded thermoplastic.

5.) All S and CW transverse line work to be Type "A" thermoplastic.

6.) All legend, symbols, arrows and CW-SC transverse line work to be Type "B-HS" thermoplastic.

0 20 40 60 80
FEET

NO.	DATE	DESCRIPTION	APPD.

REVISION

DESIGNED BY	DATE APPROVED	
A. Sullivan	Apr. 2013	
CAD BY D. Ramer C. Shearer		PROJECT NO. T00121
CHECKED BY J. Tower		1/4 SECTION 2836,2936,3036 3136,3236,3336 3436,3536,3636
PROJECT NUMBER STP-5900(246)		

REGISTERED PROFESSIONAL ENGINEER 16399PE OREGON JULY 10, 1993 LEWIS H. WARDLIP
Expires 6/30/14

APPROVALS:

SUPERVISING ENGINEER — REG. PROF. ENGR. NO. 16399PE

CITY ENGINEER — REG. PROF. ENGR. NO. 51538PE

CITY OF PORTLAND BUREAU OF TRANSPORTATION

CHARLIE HALES, MAYOR
STEVE TOWNSEN, P.E., CITY ENGINEER

NE/SE 50s Bikeway: NE Thompson to SE Woodstock

MULTNOMAH COUNTY

Permanent Signing & Striping Plan
Sta. "52" 144+43.57 to
Sta. "52" 150+73.62

SHEET NO. S-15

Plot Date: 4/1/2013 1:37:28 PM Filenames: S:_ll_Design\T00121 - 50's Bikeway Woodstock Blvd-Thompson St, SE-NE\CAD\PLAN_SHEETS\SHT S-15 PERMANENT SIGNING AND STRIPING PLAN\PLOT_SHT_S-15.dgn

Bid Documents

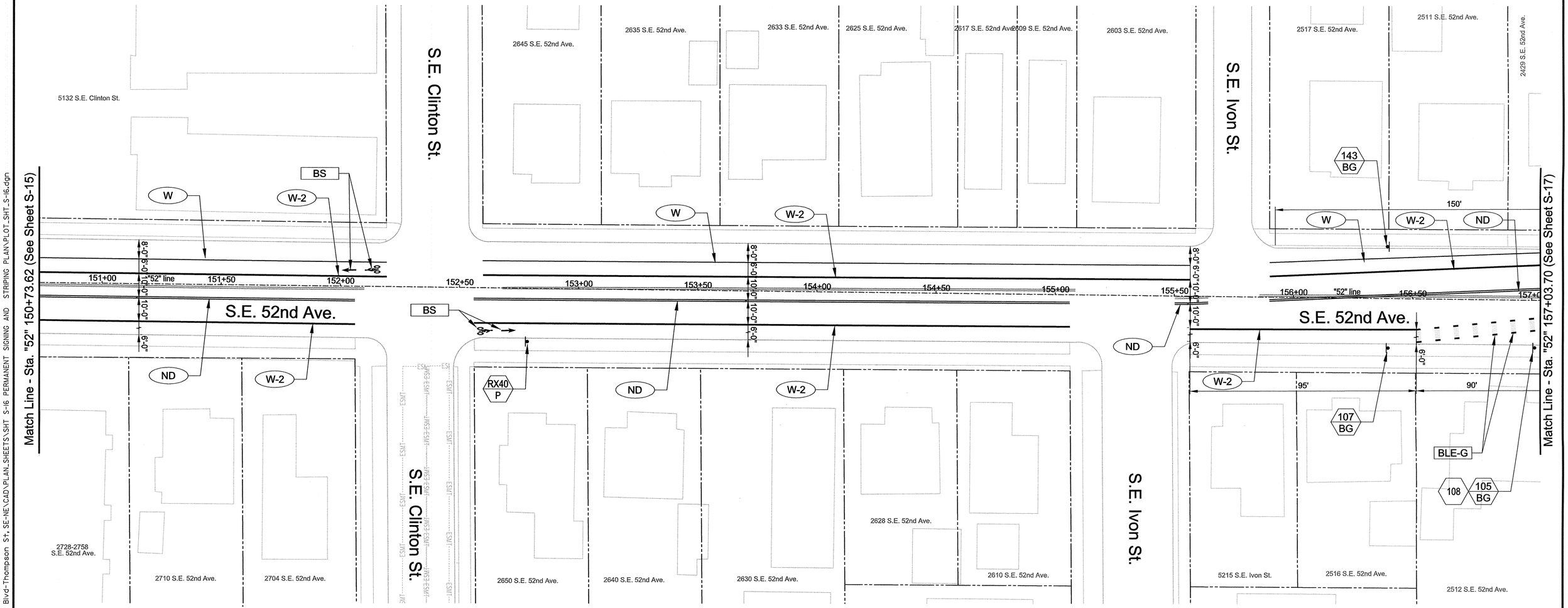

Signing Notes:

1.) Refer to traffic sign bubble and traffic sign number legends shown on sheets S-43 thru S-45.

2.) Refer to signing details shown on "P-" sheets.

3.) Contractor to coordinate with TriMet to relocate signs.

Striping Notes:

1.) Remove all conflicting striping and pavement markings.

2.) Refer to pavement marking standard detail blocks shown on "P-" sheets and "TM" sheets.

3.) All longitudinal line work to be paint except for W-2 turn lane markings.

4.) All W-2 turn lane markings to be non-profile, 120 mil., extruded thermoplastic.

5.) All S and CW transverse line work to be Type "A" thermoplastic.

6.) All legend, symbols, arrows and CW-SC transverse line work to be Type "B-HS" thermoplastic.

7.) GRN Green bar pavement markings to be Type "B-HS" thermoplastic and from "Pantone" color palette #375.

0 20 40 60 80
FEET

NO.	DATE	DESCRIPTION	APPD.
		REVISION	

DESIGNED BY A. Sullivan	DATE APPROVED Apr. 2013	
CAD BY D. Ramer C. Shearer		PROJECT NO. T00121
CHECKED BY J. Tower		1/4 SECTION 2836,2936,3036 3136,3236,3336 3436,3536,3636
PROJECT NUMBER STP-5900(246)		

REGISTERED PROFESSIONAL ENGINEER 16399PE OREGON JULY 10, 1953 LEWIS H. WARDROP
Expires 6/30/14

APPROVALS:

SUPERVISING ENGINEER — REG. PROF. ENGR. NO. 16399PE

CITY ENGINEER — REG. PROF. ENGR. NO. 51538PE

CITY OF PORTLAND BUREAU OF TRANSPORTATION

CHARLIE HALES
STEVE TOWNSEN, P.E.

MAYOR
CITY ENGINEER

CITY OF PORTLAND OREGON 1851

NE/SE 50s Bikeway: NE Thompson to SE Woodstock

MULTNOMAH COUNTY

Permanent Signing & Striping Plan
Sta. "52" 150+73.62 to
Sta. "52" 157+03.70

SHEET NO. S-16

Plot Date: 4/1/2013 11:37:29 PM Filename: S:_IL_Design\T00121 - 50's Bikeway Woodstock Blvd-Thompson St, SE-NE\CAD\PLAN_SHEETS\SHT S-16 PERMANENT SIGNING AND STRIPING PLAN\PLOT_SHT_S-16.dgn

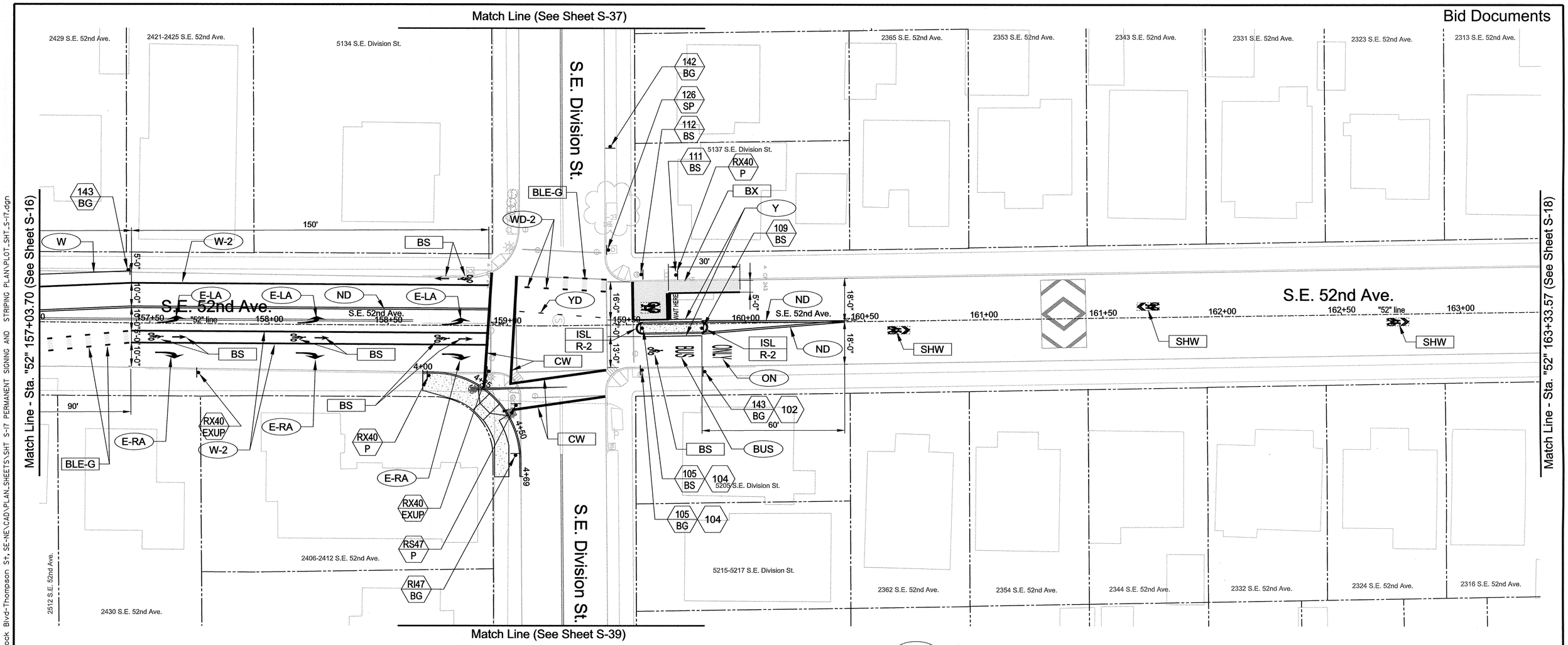

Signing Notes:

1.) Refer to traffic sign bubble and traffic sign number legends shown on sheets S-43 thru S-45.

2.) Refer to signing details shown on "P-" sheets.

3.) Contractor to coordinate with TriMet to relocate signs.

Striping Notes:

1.) Remove all conflicting striping and pavement markings.

2.) Refer to pavement marking standard detail blocks shown on "P-" sheets and "TM" sheets.

3.) All longitudinal line work to be paint except for W-2 turn lane markings.

4.) All W-2 turn lane markings to be non-profile, 120 mil., extruded thermoplastic.

5.) All S and CW transverse line work to be Type "A" thermoplastic.

6.) All legend, symbols, arrows and CW-SC transverse line work to be Type "B-HS" thermoplastic.

7.) GRN Green bar pavement markings to be Type "B-HS" thermoplastic and from "Pantone" color palette #375.

8.) Top and face of median island curbs shall be marked with yellow curb paint.

0 20 40 60 80
FEET

NO.	DATE	DESCRIPTION	APPD.
		REVISION	

DESIGNED BY A. Sullivan	DATE APPROVED Apr. 2013	
CAD BY D. Ramer C. Shearer		PROJECT NO. T00121
CHECKED BY J. Tower		T/4 SECTION 2836,2936,3036 3136,3236,3336 3436,3536,3636
PROJECT NUMBER STP-5900(246)		

REGISTERED PROFESSIONAL ENGINEER 16399PE OREGON JULY 10, 1997 LEWIS H. WARDRIP
Expires 6/30/14

APPROVALS:
SUPERVISING ENGINEER — REG. PROF. ENGR. NO. 16399PE
CITY ENGINEER — REG. PROF. ENGR. NO. 51538PE

CITY OF PORTLAND BUREAU OF TRANSPORTATION
CHARLIE HALES, MAYOR
STEVE TOWNSEN, P.E., CITY ENGINEER

NE/SE 50s Bikeway: NE Thompson to SE Woodstock
MULTNOMAH COUNTY
Permanent Signing & Striping Plan Sta. "52" 157+03.70 to Sta. "52" 163+33.57
SHEET NO. S-17

Plot Date: 4/1/2013 1:37:30 PM Filename: S:_IL_Design\T00121 - 50's Bikeway Woodstock Blvd-Thompson St, SE-NE\CAD\PLAN_SHEETS\SHT S-17 PERMANENT SIGNING AND STRIPING PLAN\PLOT_SHT_S-17.dgn

Bid Documents

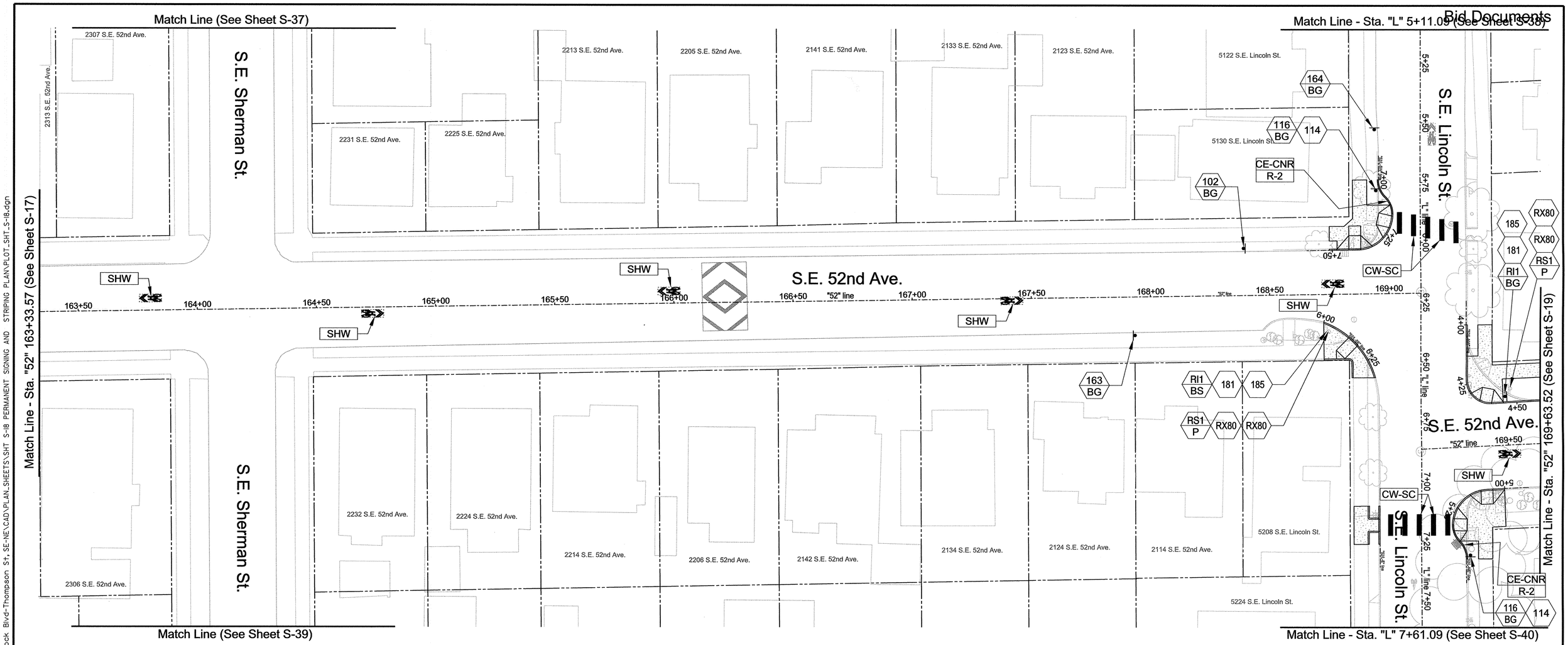

Signing Notes:

1.) Refer to traffic sign bubble and traffic sign number legends shown on sheets S-43 thru S-45.

2.) Refer to signing details shown on "P-" sheets.

3.) Contractor to coordinate with TriMet to relocate signs.

Striping Notes:

1.) Remove all conflicting striping and pavement markings.

2.) Refer to pavement marking standard detail blocks shown on "P-" sheets and "TM" sheets.

3.) All longitudinal line work to be paint except for W-2 turn lane markings.

4.) All W-2 turn lane markings to be non-profile, 120 mil., extruded thermoplastic.

5.) All S and CW transverse line work to be Type "A" thermoplastic.

6.) All legend, symbols, arrows and CW-SC transverse line work to be Type "B-HS" thermoplastic.

0 20 40 60 80
FEET

NO.	DATE	DESCRIPTION	APPD.
		REVISION	

DESIGNED BY A. Sullivan	DATE APPROVED Apr. 2013	
CAD BY D. Ramer C. Shearer		PROJECT NO. T00121
CHECKED BY J. Tower		1/4 SECTION 2836,2936,3036 3136,3236,3336 3436,3536,3636
PROJECT NUMBER STP-5900(246)		

REGISTERED PROFESSIONAL ENGINEER 16399PE OREGON JULY 10, 1993 LEWIS H. WARDROP
Expires 6/30/14

APPROVALS:

SUPERVISING ENGINEER — REG. PROF. ENGR. NO. 16399PE

CITY ENGINEER — REG. PROF. ENGR. NO. 51538PE

CITY OF PORTLAND BUREAU OF TRANSPORTATION

CHARLIE HALES — MAYOR
STEVE TOWNSEN, P.E. — CITY ENGINEER

CITY OF PORTLAND, OREGON 1851

NE/SE 50s Bikeway: NE Thompson to SE Woodstock

MULTNOMAH COUNTY

Permanent Signing & Striping Plan
Sta. "52" 163+33.57 to
Sta. "52" 169+63.52

SHEET NO. S-18

Plot Date: 4/1/2013 1:37:31 PM Filename: S:_II_Design\T00121 - 50's Bikeway Woodstock Blvd-Thompson St, SE-NE\CAD\PLAN\SHEETS\SHT S-18 PERMANENT SIGNING AND STRIPING PLAN\PLOT_SHT_S-18.dgn

Bid Documents

Signing Notes:

1.) Refer to traffic sign bubble and traffic sign number legends shown on sheets S-43 thru S-45.

2.) Refer to signing details shown on "P-" sheets.

3.) Contractor to coordinate with TriMet to relocate signs.

Striping Notes:

1.) Remove all conflicting striping and pavement markings.

2.) Refer to pavement marking standard detail blocks shown on "P-" sheets and "TM" sheets.

3.) All longitudinal line work to be paint except for W-2 turn lane markings.

4.) All W-2 turn lane markings to be non-profile, 120 mil., extruded thermoplastic.

5.) All S and CW transverse line work to be Type "A" thermoplastic.

6.) All legend, symbols, arrows and CW-SC transverse line work to be Type "B-HS" thermoplastic.

0 20 40 60 80
FEET

NO.	DATE	DESCRIPTION	APPD.

REVISION

DESIGNED BY A. Sullivan	DATE APPROVED Apr. 2013	
CAD BY D. Ramer C. Shearer		PROJECT NO. T00121
CHECKED BY J. Tower		1/4 SECTION 2836,2936,3036 3136,3236,3336 3436,3536,3636
PROJECT NUMBER STP-5900(246)		

REGISTERED PROFESSIONAL ENGINEER 16399PE OREGON JULY 10, 1993 LEWIS H. WARDRIP
Expires 6/30/14

APPROVALS:

SUPERVISING ENGINEER — REG. PROF. ENGR. NO. 16399PE

CITY ENGINEER — REG. PROF. ENGR. NO. 51538PE

CITY OF PORTLAND BUREAU OF TRANSPORTATION

CHARLIE HALES
STEVE TOWNSEN, P.E.

MAYOR
CITY ENGINEER

CITY OF PORTLAND OREGON 1851

NE/SE 50s Bikeway: NE Thompson to SE Woodstock

MULTNOMAH COUNTY

Permanent Signing & Striping Plan
Sta. "52" 169+63.52 to
Sta. "52" 175+94.23

SHEET NO. S-19

Plot Date: 4/1/2013 1:37:33 PM Filename: S:_IL Design\T00121- 50's Bikeway Woodstock Blvd-Thompson St, SE-NE\CAD\PLAN-SHEETS\SHT S-19 PERMANENT SIGNING AND STRIPING PLAN\PLOT_SHT_S-19.dgn

Bid Documents

Signing Notes:

1.) Refer to traffic sign bubble and traffic sign number legends shown on sheets S-43 thru S-45.

2.) Refer to signing details shown on "P-" sheets.

3.) Contractor to coordinate with TriMet to relocate signs.

Striping Notes:

1.) Remove all conflicting striping and pavement markings.

2.) Refer to pavement marking standard detail blocks shown on "P-" sheets and "TM" sheets.

3.) All longitudinal line work to be paint except for W-2 turn lane markings.

4.) All W-2 turn lane markings to be non-profile, 120 mil., extruded thermoplastic.

5.) All S and CW transverse line work to be Type "A" thermoplastic.

6.) All legend, symbols, arrows and CW-SC transverse line work to be Type "B-HS" thermoplastic.

0 20 40 60 80
FEET

NO.	DATE	DESCRIPTION	APPD.

REVISION

DESIGNED BY A. Sullivan	DATE APPROVED Apr. 2013	
CAD BY D. Ramer C. Shearer		PROJECT NO. T00121
CHECKED BY J. Tower		1/4 SECTION 2836,2936,3036 3136,3236,3336 3436,3536,3636
PROJECT NUMBER STP-5900(246)		

REGISTERED PROFESSIONAL ENGINEER 16399PE OREGON JULY 10, 1993 LEWIS H. WARDRIP
Expires 6/30/14

APPROVALS:

SUPERVISING ENGINEER — REG. PROF. ENGR. NO. 16399PE

CITY ENGINEER — REG. PROF. ENGR. NO. 51538PE

CITY OF PORTLAND BUREAU OF TRANSPORTATION

CHARLIE HALES
STEVE TOWNSEN, P.E.

MAYOR
CITY ENGINEER

CITY OF PORTLAND, OREGON 1851

NE/SE 50s Bikeway: NE Thompson to SE Woodstock

MULTNOMAH COUNTY

Permanent Signing & Striping Plan
Sta. "52" 175+94.23 to
Sta. "52" 182+25.08

SHEET NO. S-20

Plot Date: 4/1/2013 1:37:34 PM Filename: S:_II_Design\T00121 - 50's Bikeway Woodstock Blvd-Thompson St, SE-NE\CAD\PLAN-SHEETS\SHT S-20 PERMANENT SIGNING AND STRIPING PLAN\PLOT_SHT_S-20.dgn

Bid Documents

Signing Notes:

1.) Refer to traffic sign bubble and traffic sign number legends shown on sheets S-43 thru S-45.

2.) Refer to signing details shown on "P-" sheets.

3.) Contractor to coordinate with TriMet to relocate signs.

Striping Notes:

1.) Remove all conflicting striping and pavement markings.

2.) Refer to pavement marking standard detail blocks shown on "P-" sheets and "TM" sheets.

3.) All longitudinal line work to be paint except for W-2 turn lane markings.

4.) All W-2 turn lane markings to be non-profile, 120 mil., extruded thermoplastic.

5.) All S and CW transverse line work to be Type "A" thermoplastic.

6.) All legend, symbols, arrows and CW-SC transverse line work to be Type "B-HS" thermoplastic.

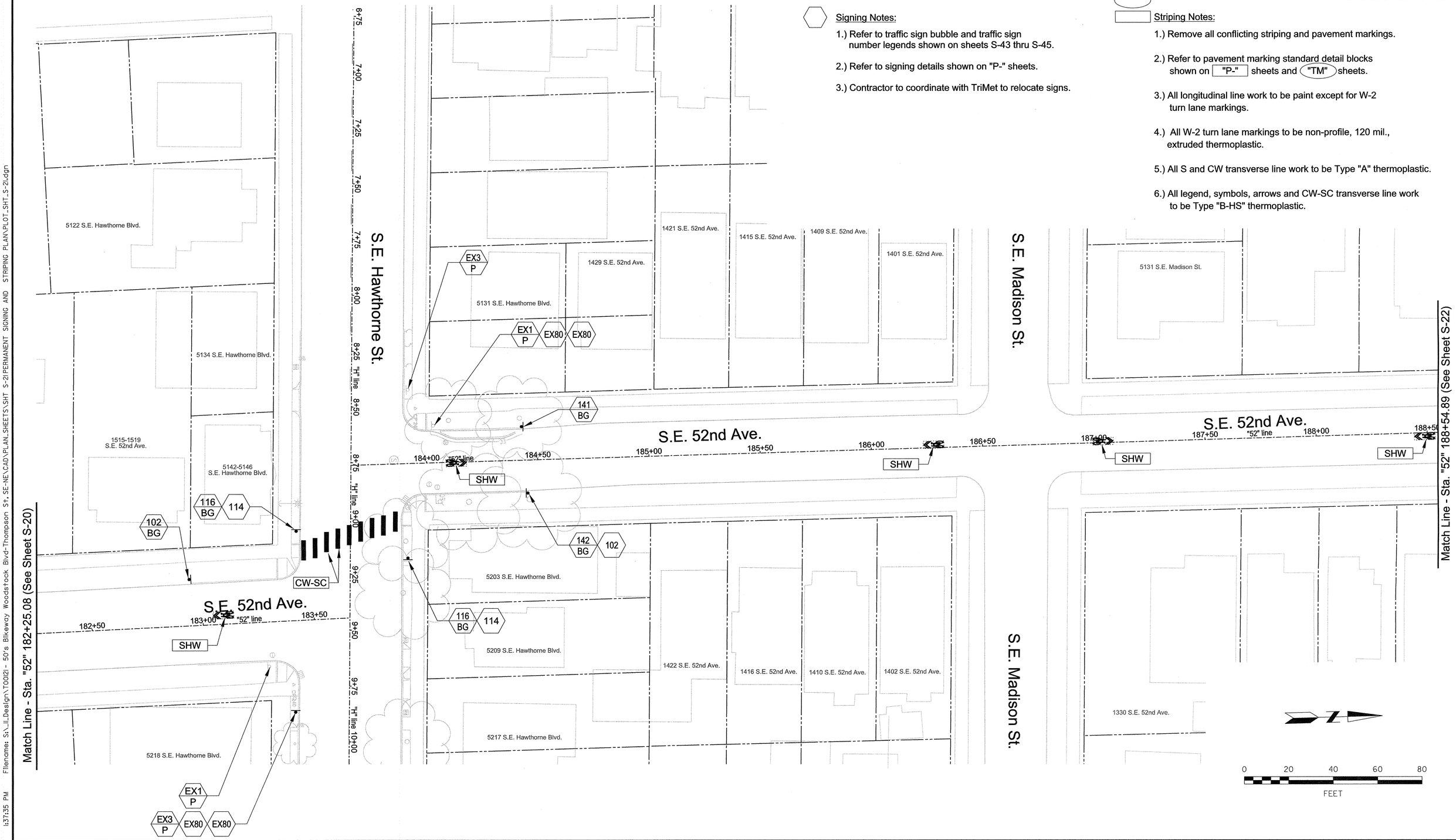

NO.	DATE	DESCRIPTION	APPD.

REVISION

DESIGNED BY A. Sullivan	DATE APPROVED Apr. 2013	
CAD BY D. Ramer C. Shearer		PROJECT NO. T00121
CHECKED BY J. Tower		1/4 SECTION 2836,2936,3036 3136,3236,3336 3436,3536,3636
PROJECT NUMBER STP-5900(246)		

REGISTERED PROFESSIONAL ENGINEER 16399PE OREGON JULY 10, 1993 LEWIS H. WARDRIP
Expires 6/30/14

APPROVALS:

SUPERVISING ENGINEER — REG. PROF. ENGR. NO. 16399PE

CITY ENGINEER — REG. PROF. ENGR. NO. 51538PE

CITY OF PORTLAND BUREAU OF TRANSPORTATION

CHARLIE HALES, MAYOR
STEVE TOWNSEN, P.E., CITY ENGINEER

CITY OF PORTLAND, OREGON 1851

NE/SE 50s Bikeway: NE Thompson to SE Woodstock

MULTNOMAH COUNTY

Permanent Signing & Striping Plan
Sta. "52" 182+25.08 to
Sta. "52" 188+54.89

SHEET NO. S-21

Plot Date: 4/1/2013 1:37:35 PM Filename: S:_II_Design\T00121 - 50's Bikeway Woodstock Blvd-Thompson St, SE-NE\CAD\PLAN_SHEETS\SHT S-21PERMANENT SIGNING AND STRIPING PLAN\PLOT_SHT_S-21.dgn

Bid Documents

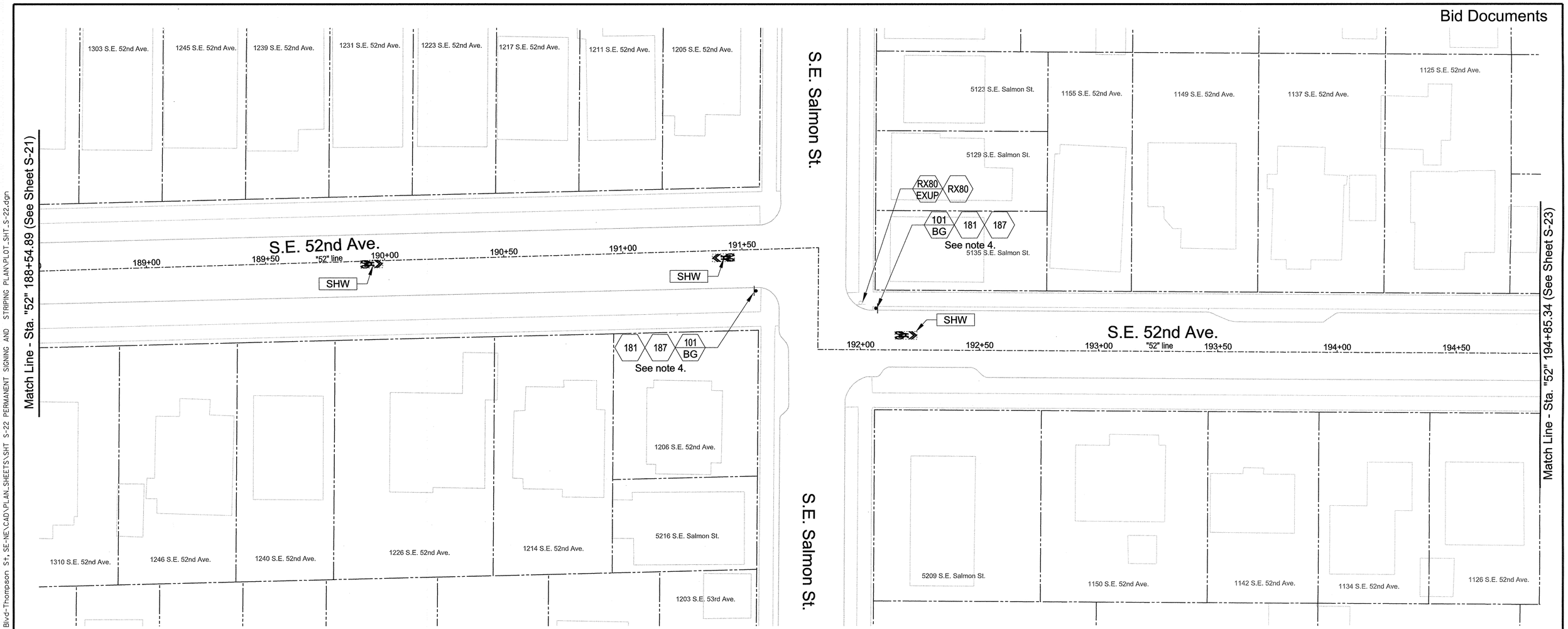

Signing Notes:

1.) Refer to traffic sign bubble and traffic sign number legends shown on sheets S-43 thru S-45.

2.) Refer to signing details shown on "P-" sheets.

3.) Contractor to coordinate with TriMet to relocate signs.

4.) Install signs 101 with sign flags. Remove sign flags after 30 days.

Striping Notes:

1.) Remove all conflicting striping and pavement markings.

2.) Refer to pavement marking standard detail blocks shown on "P-" sheets and "TM" sheets.

3.) All longitudinal line work to be paint except for W-2 turn lane markings.

4.) All W-2 turn lane markings to be non-profile, 120 mil., extruded thermoplastic.

5.) All S and CW transverse line work to be Type "A" thermoplastic.

6.) All legend, symbols, arrows and CW-SC transverse line work to be Type "B-HS" thermoplastic.

0 20 40 60 80
FEET

NO.	DATE	DESCRIPTION	APPD.

REVISION

DESIGNED BY	DATE APPROVED	
A. Sullivan	Apr. 2013	
CAD BY D. Ramer C. Shearer		PROJECT NO. T00121
CHECKED BY J. Tower		1/4 SECTION 2636,2936,3036 3136,3236,3336 3436,3536,3636

PROJECT NUMBER
STP-5900(246)

REGISTERED PROFESSIONAL ENGINEER 16399PE OREGON JULY 10, 1993 LEWIS H. WARDRIP
Expires 6/30/14

APPROVALS:

SUPERVISING ENGINEER — REG. PROF. ENGR. NO. 16399PE

CITY ENGINEER — REG. PROF. ENGR. NO. 51538PE

CITY OF PORTLAND BUREAU OF TRANSPORTATION

CHARLIE HALES
STEVE TOWNSEN, P.E.

MAYOR
CITY ENGINEER

CITY OF PORTLAND, OREGON 1851

NE/SE 50s Bikeway: NE Thompson to SE Woodstock

MULTNOMAH COUNTY

Permanent Signing & Striping Plan
Sta. "52" 188+54.89 to
Sta. "52" 194+85.34

SHEET NO. S-22

Plot Date: 4/1/2013 1:37:36 PM Filename: S:_ll_Design\T00121 - 50's Bikeway Woodstock Blvd-Thompson St, SE-NE\CAD\PLAN_SHEETS\SHT S-22 PERMANENT SIGNING AND STRIPING PLAN\PLOT_SHT_S-22.dgn

Bid Documents

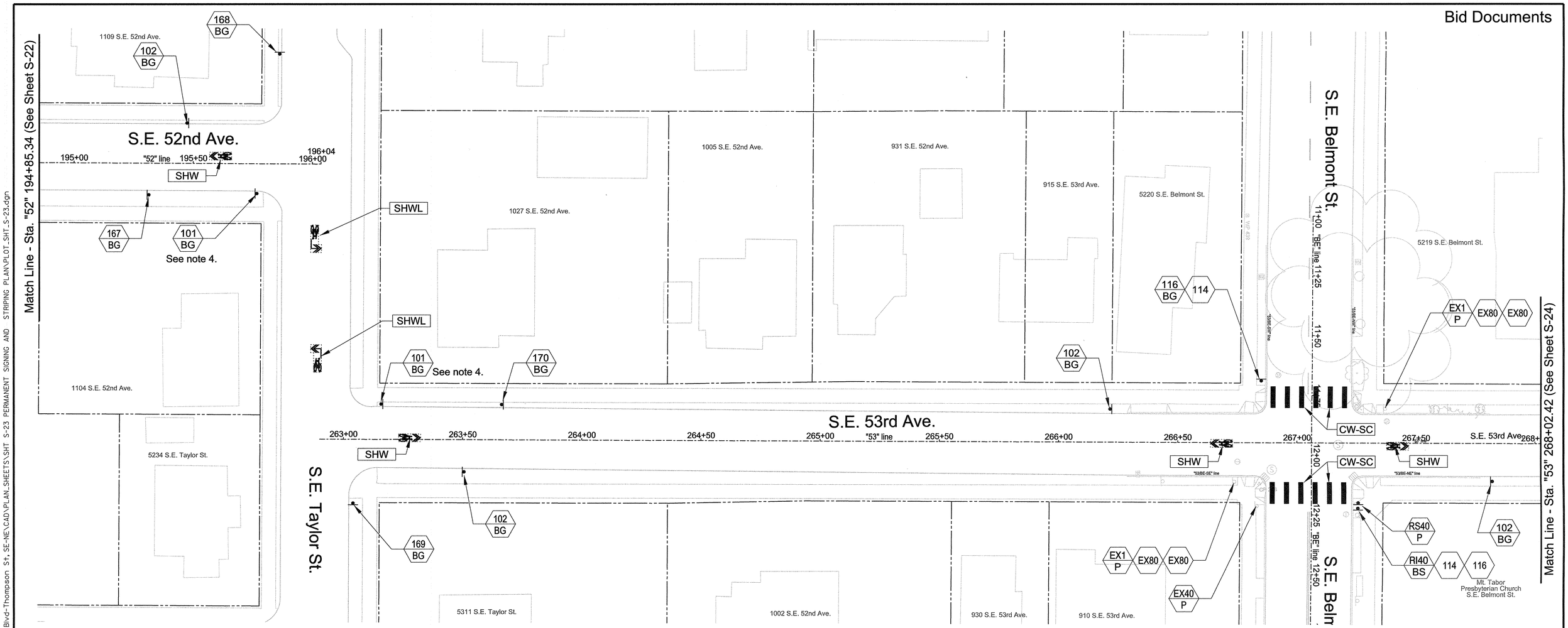

Signing Notes:

1.) Refer to traffic sign bubble and traffic sign number legends shown on sheets S-43 thru S-45.

2.) Refer to signing details shown on "P-" sheets.

3.) Contractor to coordinate with TriMet to relocate signs.

4.) Install signs 101 with sign flags. Remove sign flags after 30 days.

Striping Notes:

1.) Remove all conflicting striping and pavement markings.

2.) Refer to pavement marking standard detail blocks shown on "P-" sheets and "TM" sheets.

3.) All longitudinal line work to be paint except for W-2 turn lane markings.

4.) All W-2 turn lane markings to be non-profile, 120 mil., extruded thermoplastic.

5.) All S and CW transverse line work to be Type "A" thermoplastic.

6.) All legend, symbols, arrows and CW-SC transverse line work to be Type "B-HS" thermoplastic.

0 20 40 60 80
FEET

NO.	DATE	DESCRIPTION	APPD.
		REVISION	

DESIGNED BY A. Sullivan	DATE APPROVED Apr. 2013	
CAD BY D. Ramer C. Shearer		PROJECT NO. T00121
CHECKED BY J. Tower		T.A. SECTION 2836,2936,3036 3136,3236,3336 3436,3536,3636
PROJECT NUMBER STP-5900(246)		

REGISTERED PROFESSIONAL ENGINEER 16399PE OREGON JULY 10, 1997 LEWIS H. WARDRIP
Expires 6/30/14

APPROVALS:
SUPERVISING ENGINEER — REG. PROF. ENGR. NO. 16399PE
CITY ENGINEER — REG. PROF. ENGR. NO. 51538PE

CITY OF PORTLAND BUREAU OF TRANSPORTATION
CHARLIE HALES, MAYOR
STEVE TOWNSEN, P.E., CITY ENGINEER

CITY OF PORTLAND, OREGON 1851

NE/SE 50s Bikeway: NE Thompson to SE Woodstock
MULTNOMAH COUNTY
Permanent Signing & Striping Plan
Sta. "52" 194+85.34 to
Sta. "53" 268+02.42
SHEET NO. S-23

Plot Date: 4/1/2013 1:37:37 PM Filename: S:_ILDesign\T00121 - 50's Bikeway Woodstock Blvd-Thompson St, SE-NE\CAD\PLAN_SHEETS\SHT S-23 PERMANENT SIGNING AND STRIPING PLAN\PLOT_SHT_S-23.dgn

Bid Documents

Signing Notes:

1.) Refer to traffic sign bubble and traffic sign number legends shown on sheets S-43 thru S-45.

2.) Refer to signing details shown on "P-" sheets.

3.) Contractor to coordinate with TriMet to relocate signs.

Striping Notes:

1.) Remove all conflicting striping and pavement markings.

2.) Refer to pavement marking standard detail blocks shown on "P-" sheets and "TM" sheets.

3.) All longitudinal line work to be paint except for W-2 turn lane markings.

4.) All W-2 turn lane markings to be non-profile, 120 mil., extruded thermoplastic.

5.) All S and CW transverse line work to be Type "A" thermoplastic.

6.) All legend, symbols, arrows and CW-SC transverse line work to be Type "B-HS" thermoplastic.

0 20 40 60 80
FEET

NO.	DATE	DESCRIPTION	APPD.

REVISION

DESIGNED BY A. Sullivan	DATE APPROVED Apr. 2013	
CAD BY D. Ramer C. Shearer		PROJECT NO. T00121
CHECKED BY J. Tower		1/4 SECTION 2836,2936,3036 3136,3236,3336 3436,3536,3636
PROJECT NUMBER STP-5900(246)		

REGISTERED PROFESSIONAL ENGINEER 16399PE OREGON JULY 10, 1993 LEWIS H. WARDRIP
Expires 6/30/14

APPROVALS:

SUPERVISING ENGINEER — REG. PROF. ENGR. NO. 16399PE

CITY ENGINEER — REG. PROF. ENGR. NO. 51538PE

CITY OF PORTLAND BUREAU OF TRANSPORTATION

CHARLIE HALES, MAYOR
STEVE TOWNSEN, P.E., CITY ENGINEER

CITY OF PORTLAND OREGON 1851

NE/SE 50s Bikeway: NE Thompson to SE Woodstock

MULTNOMAH COUNTY

Permanent Signing & Striping Plan
Sta. "53" 268+02.42 to
Sta. "53" 274+02.41

SHEET NO. S-24

Plot Date: 4/1/2013 1:37:38 PM Filename: S:_IL_Design\T00121 - 50's Bikeway Woodstock Blvd-Thompson St, SE-NE\CAD\PLAN_SHEETS\SHT S-24 PERMANENT SIGNING AND STRIPING PLAN\PLOT_SHT_S-24.dgn

Bid Documents

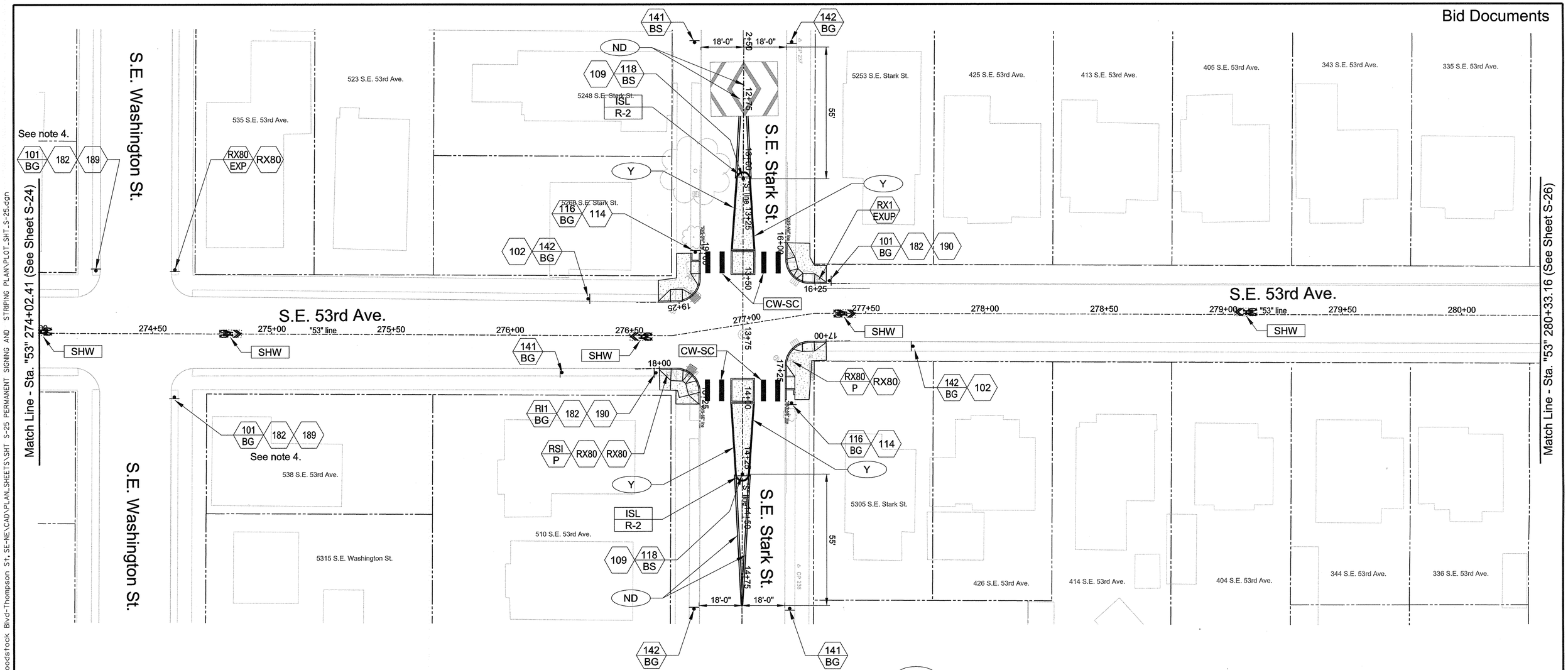

Signing Notes:

1.) Refer to traffic sign bubble and traffic sign number legends shown on sheets S-43 thru S-45.

2.) Refer to signing details shown on "P-" sheets.

3.) Contractor to coordinate with TriMet to relocate signs.

4.) Install signs 101 with sign flags. Remove sign flags after 30 days.

Striping Notes:

1.) Remove all conflicting striping and pavement markings.

2.) Refer to pavement marking standard detail blocks shown on "P-" sheets and "TM" sheets.

3.) All longitudinal line work to be paint except for W-2 turn lane markings.

4.) All W-2 turn lane markings to be non-profile, 120 mil., extruded thermoplastic.

5.) All S and CW transverse line work to be Type "A" thermoplastic.

6.) All legend, symbols, arrows and CW-SC transverse line work to be Type "B-HS" thermoplastic.

7.) Top and face of median island curbs shall be marked with yellow curb paint.

0 20 40 60 80
FEET

NO.	DATE	DESCRIPTION	APPD.

REVISION

DESIGNED BY	DATE APPROVED	
A. Sullivan	Apr. 2013	
CAD BY D. Ramer C. Shearer		PROJECT NO. T00121
CHECKED BY J. Tower		1/4 SECTION 2836,2936,3036 3136,3236,3336 3436,3536,3636

PROJECT NUMBER STP-5900(246)

REGISTERED PROFESSIONAL ENGINEER 16399PE OREGON JULY 10, 1993 LEWIS H. WARDRIP
Expires 6/30/14

APPROVALS:

SUPERVISING ENGINEER — REG. PROF. ENGR. NO. 16399PE

CITY ENGINEER — REG. PROF. ENGR. NO. 51538PE

CITY OF PORTLAND BUREAU OF TRANSPORTATION

CHARLIE HALES, MAYOR
STEVE TOWNSEN, P.E., CITY ENGINEER

NE/SE 50s Bikeway: NE Thompson to SE Woodstock

MULTNOMAH COUNTY

Permanent Signing & Striping Plan
Sta. "53" 274+02.41 to
Sta. "53" 280+33.16

SHEET NO. S-25

Plot Date: 4/1/2013 1:37:39 PM Filename: S:_II_Design\T00121 - 50's Bikeway Woodstock Blvd-Thompson St, SE-NE\CAD\PLAN_SHEETS\SHT S-25 PERMANENT SIGNING AND STRIPING PLAN\PLOT_SHT_S-25.dgn

Bid Documents

Signing Notes:

1.) Refer to traffic sign bubble and traffic sign number legends shown on sheets S-43 thru S-45.

2.) Refer to signing details shown on "P-" sheets.

3.) Contractor to coordinate with TriMet to relocate signs.

Striping Notes:

1.) Remove all conflicting striping and pavement markings.

2.) Refer to pavement marking standard detail blocks shown on "P-" sheets and "TM" sheets.

3.) All longitudinal line work to be paint except for W-2 turn lane markings.

4.) All W-2 turn lane markings to be non-profile, 120 mil., extruded thermoplastic.

5.) All S and CW transverse line work to be Type "A" thermoplastic.

6.) All legend, symbols, arrows and CW-SC transverse line work to be Type "B-HS" thermoplastic.

0 20 40 60 80
FEET

NO.	DATE	DESCRIPTION	APPD.

REVISION

DESIGNED BY A. Sullivan	DATE APPROVED Apr. 2013	
CAD BY D. Ramer C. Shearer		PROJECT NO. T00121
CHECKED BY J. Tower		1/4 SECTION 2836,2936,3036 3136,3236,3336 3436,3536,3636
PROJECT NUMBER STP-5900(246)		

REGISTERED PROFESSIONAL ENGINEER 16399PE OREGON JULY 10, 1993 LEWIS H. WARDRIP
Expires 6/30/14

APPROVALS:

SUPERVISING ENGINEER — REG. PROF. ENGR. NO. 16399PE

CITY ENGINEER — REG. PROF. ENGR. NO. 51538PE

CITY OF PORTLAND BUREAU OF TRANSPORTATION

CHARLIE HALES, MAYOR
STEVE TOWNSEN, P.E., CITY ENGINEER

NE/SE 50s Bikeway: NE Thompson to SE Woodstock

MULTNOMAH COUNTY

Permanent Signing & Striping Plan
Sta. "53" 280+33.16 to
Sta. "53" 286+63.16

SHEET NO. S-26

Plot Date: 4/1/2013 1:37:40 PM Filename: S:_IL\Design\T00121- 50's Bikeway Woodstock Blvd-Thompson St, SE-NE\CAD\PLAN_SHEETS\SHT S-26 PERMANENT SIGNING AND STRIPING PLAN\PLOT_SHT_S-26.dgn

Bid Documents

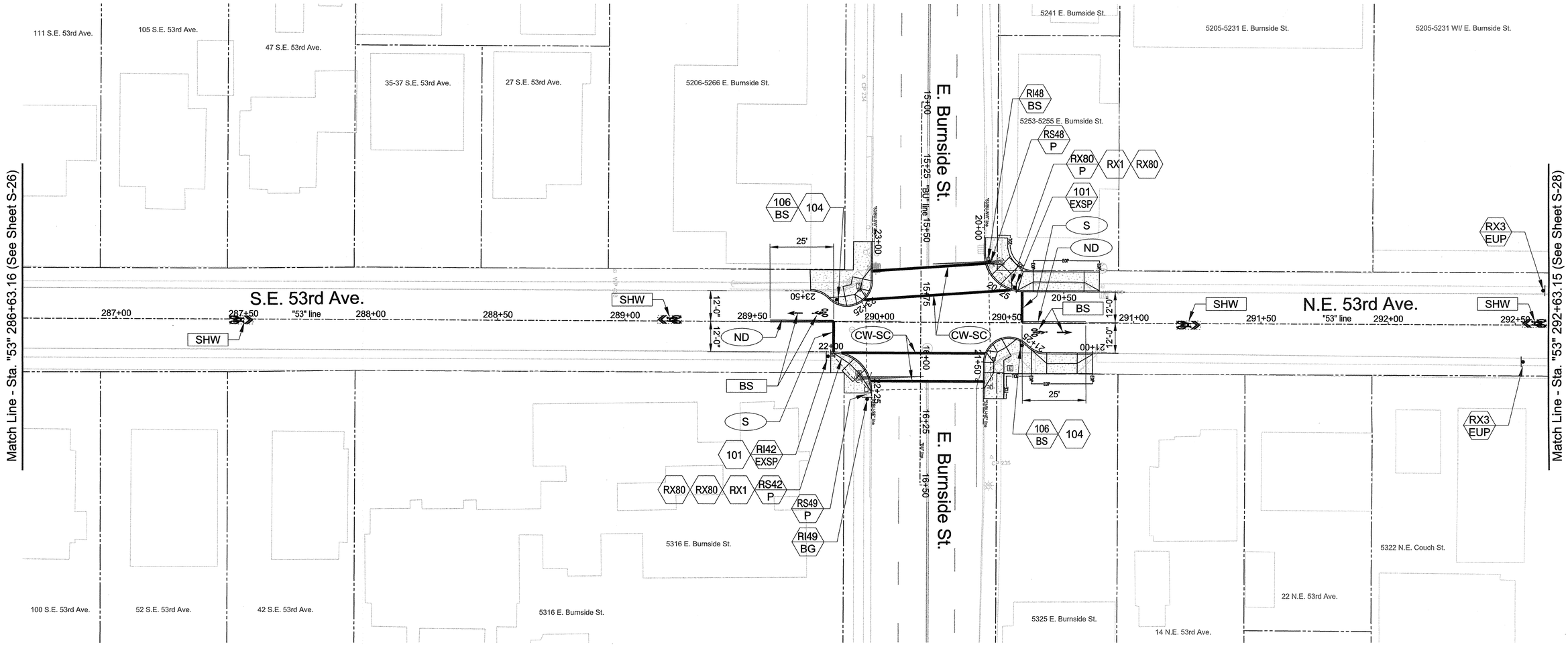

Signing Notes:

1.) Refer to traffic sign bubble and traffic sign number legends shown on sheets S-43 thru S-45.

2.) Refer to signing details shown on "P-" sheets.

3.) Contractor to coordinate with TriMet to relocate signs.

Striping Notes:

1.) Remove all conflicting striping and pavement markings.

2.) Refer to pavement marking standard detail blocks shown on "P-" sheets and "TM" sheets.

3.) All longitudinal line work to be paint except for W-2 turn lane markings.

4.) All W-2 turn lane markings to be non-profile, 120 mil., extruded thermoplastic.

5.) All S and CW transverse line work to be Type "A" thermoplastic.

6.) All legend, symbols, arrows and CW-SC transverse line work to be Type "B-HS" thermoplastic.

0 20 40 60 80
FEET

NO.	DATE	DESCRIPTION	APPD.
		REVISION	

DESIGNED BY A. Sullivan	DATE APPROVED Apr. 2013	
CAD BY D. Ramer C. Shearer		PROJECT NO. T00121
CHECKED BY J. Tower		T/A SECTION 2836,2936,3036 3136,3236,3336 3436,3536,3636
PROJECT NUMBER STP-5900(246)		

REGISTERED PROFESSIONAL ENGINEER 16399PE OREGON JULY 10, 1993 LEWIS H. WARDRIP
Expires 6/30/14

APPROVALS:

SUPERVISING ENGINEER — REG. PROF. ENGR. NO. 16399PE

CITY ENGINEER — REG. PROF. ENGR. NO. 51538PE

CITY OF PORTLAND BUREAU OF TRANSPORTATION

CHARLIE HALES, MAYOR
STEVE TOWNSEN, P.E., CITY ENGINEER

CITY OF PORTLAND, OREGON 1851

NE/SE 50s Bikeway: NE Thompson to SE Woodstock

MULTNOMAH COUNTY

Permanent Signing & Striping Plan
Sta. "53" 286+63.16 to
Sta. "53" 292+63.15

SHEET NO. S-27

Plot Date: 4/1/2013 1:37:41 PM Filename: S:_IL_Design\T00121- 50's Bikeway Woodstock Blvd-Thompson St, SE-NE\CAD\PLAN_SHEETS\SHT S-27 PERMANENT SIGNING AND STRIPING PLAN\PLOT_SHT_S-27.dgn

Bid Documents

Signing Notes:

1.) Refer to traffic sign bubble and traffic sign number legends shown on sheets S-43 thru S-45.

2.) Refer to signing details shown on "P-" sheets.

3.) Contractor to coordinate with TriMet to relocate signs.

Striping Notes:

1.) Remove all conflicting striping and pavement markings.

2.) Refer to pavement marking standard detail blocks shown on "P-" sheets and "TM" sheets.

3.) All longitudinal line work to be paint except for W-2 turn lane markings.

4.) All W-2 turn lane markings to be non-profile, 120 mil., extruded thermoplastic.

5.) All S and CW transverse line work to be Type "A" thermoplastic.

6.) All legend, symbols, arrows and CW-SC transverse line work to be Type "B-HS" thermoplastic.

0 20 40 60 80
FEET

NO.	DATE	DESCRIPTION	APPD.

REVISION

DESIGNED BY	DATE APPROVED	
A. Sullivan	Apr. 2013	
CAD BY D. Ramer C. Shearer		PROJECT NO. T00121
CHECKED BY J. Tower		T/A SECTION 2836,2936,3036 3136,3236,3336 3436,3536,3636

PROJECT NUMBER
STP-5900(246)

REGISTERED PROFESSIONAL ENGINEER 16399PE OREGON JULY 10, 1993 LEWIS H. WARDRIP
Expires 6/30/14

APPROVALS:

SUPERVISING ENGINEER — REG. PROF. ENGR. NO. 16399PE

CITY ENGINEER — REG. PROF. ENGR. NO. 51538PE

CITY OF PORTLAND BUREAU OF TRANSPORTATION

CHARLIE HALES, MAYOR
STEVE TOWNSEN, P.E., CITY ENGINEER

CITY OF PORTLAND OREGON 1851

NE/SE 50s Bikeway: NE Thompson to SE Woodstock

MULTNOMAH COUNTY

Permanent Signing & Striping Plan
Sta. "53" 292+63.15 to
Sta. "53" 298+93.25

SHEET NO. S-28

Plot Date: 4/1/2013 1:37:42 PM Filename: S:_JL_Design\T00121- 50's Bikeway Woodstock Blvd-Thompson St, SE-NE\CAD\PLAN_SHEETS\SHT S-28 PERMANENT SIGNING AND STRIPING PLAN\PLOT_SHT_S-28.dgn

Bid Documents

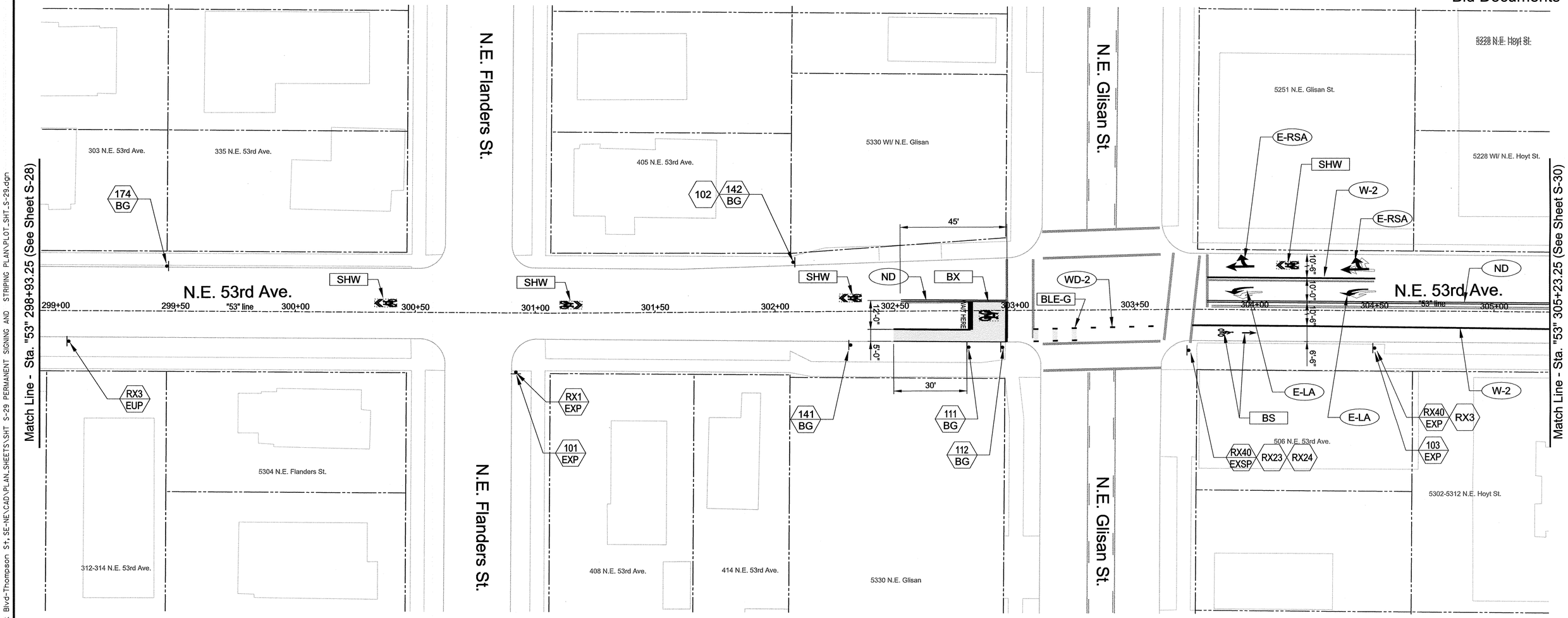

Signing Notes:

1.) Refer to traffic sign bubble and traffic sign number legends shown on sheets S-43 thru S-45.

2.) Refer to signing details shown on "P-" sheets.

3.) Contractor to coordinate with TriMet to relocate signs.

Striping Notes:

1.) Remove all conflicting striping and pavement markings.

2.) Refer to pavement marking standard detail blocks shown on "P-" sheets and "TM" sheets.

3.) All longitudinal line work to be paint except for W-2 turn lane markings.

4.) All W-2 turn lane markings to be non-profile, 120 mil., extruded thermoplastic.

5.) All S and CW transverse line work to be Type "A" thermoplastic.

6.) All legend, symbols, arrows and CW-SC transverse line work to be Type "B-HS" thermoplastic.

0 20 40 60 80
FEET

NO.	DATE	DESCRIPTION	APPD.
		REVISION	

DESIGNED BY A. Sullivan	DATE APPROVED Apr. 2013	
CAD BY D. Ramer C. Shearer		PROJECT NO. T00121
CHECKED BY J. Tower		1/4 SECTION 2836,2936,3036 3136,3236,3336 3436,3536,3636
PROJECT NUMBER STP-5900(246)		

REGISTERED PROFESSIONAL ENGINEER 16399PE OREGON JULY 10, 1993 LEWIS H. WARDROP
Expires 6/30/14

APPROVALS:

SUPERVISING ENGINEER — REG. PROF. ENGR. NO. 16399PE

CITY ENGINEER — REG. PROF. ENGR. NO. 51538PE

CITY OF PORTLAND BUREAU OF TRANSPORTATION

CHARLIE HALES, MAYOR
STEVE TOWNSEN, P.E., CITY ENGINEER

NE/SE 50s Bikeway: NE Thompson to SE Woodstock

MULTNOMAH COUNTY

Permanent Signing & Striping Plan
Sta. "53" 298+93.25 to
Sta. "53" 305+23.25

SHEET NO. S-29

Plot Date: 4/1/2013 1:37:43 PM Filename: S:_II_Design\T00121 - 50's Bikeway Woodstock Blvd-Thompson St, SE-NE\CAD\PLAN_SHEETS\SHT S-29 PERMANENT SIGNING AND STRIPING PLAN\PLOT_SHT_S-29.dgn

Bid Documents

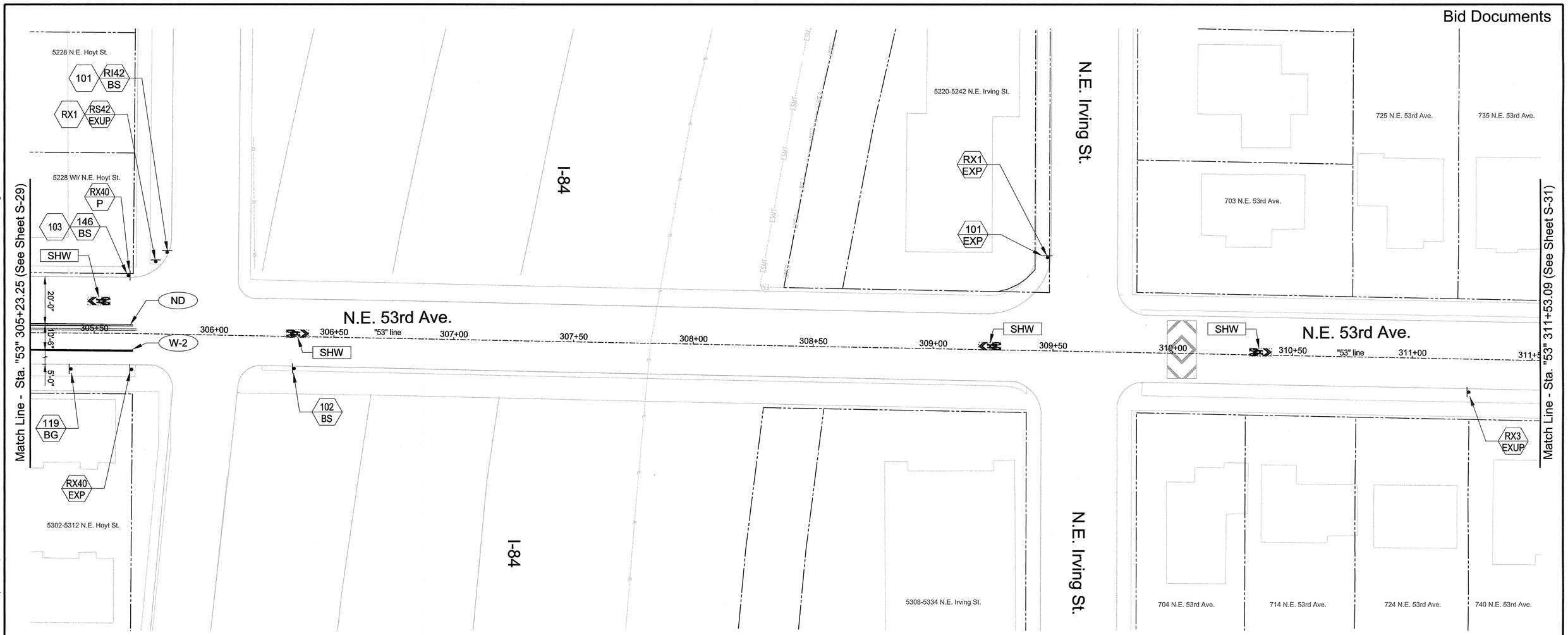

Signing Notes:

1.) Refer to traffic sign bubble and traffic sign number legends shown on sheets S-43 thru S-45.

2.) Refer to signing details shown on "P-" sheets.

3.) Contractor to coordinate with TriMet to relocate signs.

Striping Notes:

1.) Remove all conflicting striping and pavement markings.

2.) Refer to pavement marking standard detail blocks shown on "P-" sheets and "TM" sheets.

3.) All longitudinal line work to be paint except for W-2 turn lane markings.

4.) All W-2 turn lane markings to be non-profile, 120 mil., extruded thermoplastic.

5.) All S and CW transverse line work to be Type "A" thermoplastic.

6.) All legend, symbols, arrows and CW-SC transverse line work to be Type "B-HS" thermoplastic.

0 20 40 60 80
FEET

NO.	DATE	DESCRIPTION	APPD.

REVISION

DESIGNED BY	DATE APPROVED	
A. Sullivan	Apr. 2013	
CAD BY D. Ramer C. Shearer		PROJECT NO. T00121
CHECKED BY J. Tower		1/4 SECTION 2836,2936,3036 3136,3236,3336 3436,3536,3636

PROJECT NUMBER
STP-5900(246)

REGISTERED PROFESSIONAL ENGINEER 16399PE OREGON JULY 10, 1993 LEWIS H. WARDRIP
Expires 6/30/14

APPROVALS:

SUPERVISING ENGINEER — REG. PROF. ENGR. NO. 16399PE

CITY ENGINEER — REG. PROF. ENGR. NO. 51538PE

CITY OF PORTLAND BUREAU OF TRANSPORTATION

CHARLIE HALES
STEVE TOWNSEN, P.E.

MAYOR
CITY ENGINEER

CITY OF PORTLAND OREGON 1851

NE/SE 50s Bikeway: NE Thompson to SE Woodstock

MULTNOMAH COUNTY

Permanent Signing & Striping Plan
Sta. "53" 305+23.25 to
Sta. "53" 311+53.09

SHEET NO. S-30

Plot Date: 4/1/2013 1:37:44 PM Filename: S:_II_Design\T00121 - 50's Bikeway Woodstock Blvd-Thompson St, SE-NE\CAD\PLAN_SHEETS\SHT S-30 PERMANENT SIGNING AND STRIPING PLAN\PLOT_SHT_S-30.dgn

Bid Documents

Signing Notes:

1.) Refer to traffic sign bubble and traffic sign number legends shown on sheets S-43 thru S-45.

2.) Refer to signing details shown on "P-" sheets.

3.) Contractor to coordinate with TriMet to relocate signs.

Striping Notes:

1.) Remove all conflicting striping and pavement markings.

2.) Refer to pavement marking standard detail blocks shown on "P-" sheets and "TM" sheets.

3.) All longitudinal line work to be paint except for W-2 turn lane markings.

4.) All W-2 turn lane markings to be non-profile, 120 mil., extruded thermoplastic.

5.) All S and CW transverse line work to be Type "A" thermoplastic.

6.) All legend, symbols, arrows and CW-SC transverse line work to be Type "B-HS" thermoplastic.

0 20 40 60 80
FEET

NO.	DATE	DESCRIPTION	APPD.

REVISION

DESIGNED BY	DATE APPROVED	
A. Sullivan	Apr. 2013	
CAD BY D. Ramer C. Shearer		PROJECT NO. T00121
CHECKED BY J. Tower		1/4 SECTION 2836,2936,3036 3136,3236,3336 3436,3536,3636

PROJECT NUMBER
STP-5900(246)

REGISTERED PROFESSIONAL ENGINEER 16399PE OREGON JULY 10, 1993 LEWIS H. WARDROP
Expires 6/30/14

APPROVALS:

SUPERVISING ENGINEER — REG. PROF. ENGR. NO. 16399PE

CITY ENGINEER — REG. PROF. ENGR. NO. 51538PE

CITY OF PORTLAND BUREAU OF TRANSPORTATION

CHARLIE HALES, MAYOR
STEVE TOWNSEN, P.E., CITY ENGINEER

CITY OF PORTLAND, OREGON 1851

NE/SE 50s Bikeway: NE Thompson to SE Woodstock

MULTNOMAH COUNTY

Permanent Signing & Striping Plan
Sta. "53" 311+53.09 to
Sta. "53" 317+43.49

SHEET NO. S-31

Plot Date: 4/1/2013 1:37:45 PM Filename: S:_ll_Design\T00121 - 50's Bikeway Woodstock Blvd-Thompson St, SE-NE\CAD\PLAN_SHEETS\SHT S-31PERMANENT SIGNING AND STRIPING PLAN\PLOT_SHT_S-31.dgn

Bid Documents

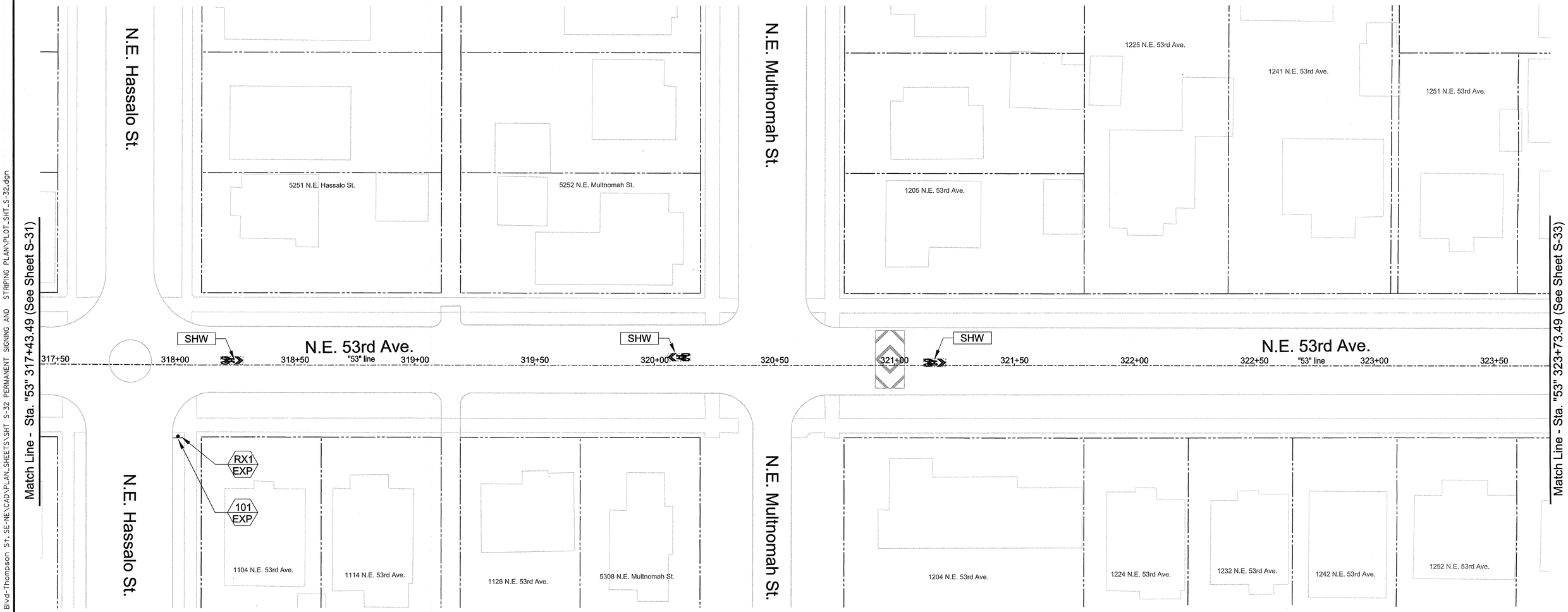

Signing Notes:

1.) Refer to traffic sign bubble and traffic sign number legends shown on sheets S-43 thru S-45.

2.) Refer to signing details shown on "P-" sheets.

3.) Contractor to coordinate with TriMet to relocate signs.

Striping Notes:

1.) Remove all conflicting striping and pavement markings.

2.) Refer to pavement marking standard detail blocks shown on "P-" sheets and "TM" sheets.

3.) All longitudinal line work to be paint except for W-2 turn lane markings.

4.) All W-2 turn lane markings to be non-profile, 120 mil., extruded thermoplastic.

5.) All S and CW transverse line work to be Type "A" thermoplastic.

6.) All legend, symbols, arrows and CW-SC transverse line work to be Type "B-HS" thermoplastic.

0 20 40 60 80
FEET

NO.	DATE	DESCRIPTION	APPD.

REVISION

DESIGNED BY A. Sullivan	DATE APPROVED Apr. 2013	
CAD BY D. Ramer C. Shearer		PROJECT NO. T00121
CHECKED BY J. Tower		I.T.S. SECTION 2836,2836,3036 3136,3236,3336 3436,3536,3636
PROJECT NUMBER STP-5900(246)		

REGISTERED PROFESSIONAL ENGINEER 16399PE OREGON JULY 10, 1993 LEWIS H. WARDRIP
Expires 6/30/14

APPROVALS:

SUPERVISING ENGINEER — REG. PROF. ENGR. NO. 16399PE

CITY ENGINEER — REG. PROF. ENGR. NO. 51538PE

CITY OF PORTLAND BUREAU OF TRANSPORTATION

CHARLIE HALES, MAYOR
STEVE TOWNSEN, P.E., CITY ENGINEER

CITY OF PORTLAND OREGON 1851

NE/SE 50s Bikeway: NE Thompson to SE Woodstock

MULTNOMAH COUNTY

Permanent Signing & Striping Plan
Sta. "53" 317+43.49 to
Sta. "53" 323+73.49

SHEET NO. S-32

Plot Date: 4/1/2013 1:37:47 PM Filename: S:_LDesign\T00121- 50's Bikeway Woodstock Blvd-Thompson St, SE-NE\CAD\PLAN-SHEETS\SHT S-32 PERMANENT SIGNING AND STRIPING PLAN\PLOT_SHT_S-32.dgn

Bid Documents

Signing Notes:

1.) Refer to traffic sign bubble and traffic sign number legends shown on sheets S-43 thru S-45.

2.) Refer to signing details shown on "P-" sheets.

3.) Contractor to coordinate with TriMet to relocate signs.

Striping Notes:

1.) Remove all conflicting striping and pavement markings.

2.) Refer to pavement marking standard detail blocks shown on "P-" sheets and "TM" sheets.

3.) All longitudinal line work to be paint except for W-2 turn lane markings.

4.) All W-2 turn lane markings to be non-profile, 120 mil., extruded thermoplastic.

5.) All S and CW transverse line work to be Type "A" thermoplastic.

6.) All legend, symbols, arrows and CW-SC transverse line work to be Type "B-HS" thermoplastic.

0 20 40 60 80
FEET

NO.	DATE	DESCRIPTION	APPD.

REVISION

DESIGNED BY A. Sullivan	DATE APPROVED Apr. 2013	
CAD BY D. Ramer C. Shearer		PROJECT NO. T00121
CHECKED BY J. Tower		1/4 SECTION 2836,2936,3036 3136,3236,3336 3436,3536,3636
PROJECT NUMBER STP-5900(246)		

REGISTERED PROFESSIONAL ENGINEER 16399PE OREGON JULY 10, 1993 LEWIS H. WARDRIP
Expires 6/30/14

APPROVALS:

SUPERVISING ENGINEER — REG. PROF. ENGR. NO. 16399PE

CITY ENGINEER — REG. PROF. ENGR. NO. 51538PE

CITY OF PORTLAND BUREAU OF TRANSPORTATION

CHARLIE HALES, MAYOR
STEVE TOWNSEN, P.E., CITY ENGINEER

CITY OF PORTLAND OREGON 1851

NE/SE 50s Bikeway: NE Thompson to SE Woodstock

MULTNOMAH COUNTY

Permanent Signing & Striping Plan
Sta. "53" 323+73.49 to
Sta. "53" 330+09.76

SHEET NO. S-33

Plot Date: 4/1/2013 1:37:48 PM Filename: S:_ILDesign\T00121- 50's Bikeway Woodstock Blvd-Thompson St, SE-NE\CAD\PLAN-SHEETS\SHT S-33 PERMANENT SIGNING AND STRIPING PLAN\PLOT_SHT_S-33.dgn

Bid Documents

Signing Notes:

1.) Refer to traffic sign bubble and traffic sign number legends shown on sheets S-43 thru S-45.

2.) Refer to signing details shown on "P-" sheets.

3.) Contractor to coordinate with TriMet to relocate signs.

Striping Notes:

1.) Remove all conflicting striping and pavement markings.

2.) Refer to pavement marking standard detail blocks shown on "P-" sheets and "TM" sheets.

3.) All longitudinal line work to be paint except for W-2 turn lane markings.

4.) All W-2 turn lane markings to be non-profile, 120 mil., extruded thermoplastic.

5.) All S and CW transverse line work to be Type "A" thermoplastic.

6.) All legend, symbols, arrows and CW-SC transverse line work to be Type "B-HS" thermoplastic.

0 20 40 60 80
FEET

NO.	DATE	DESCRIPTION	APPD.

REVISION

DESIGNED BY A. Sullivan	DATE APPROVED Apr. 2013	
CAD BY D. Ramer C. Shearer		PROJECT NO. T00121
CHECKED BY J. Tower		1/4 SECTION 2836,2936,3036 3136,3236,3336 3436,3536,3636
PROJECT NUMBER STP-5900(246)		

REGISTERED PROFESSIONAL ENGINEER 16399PE OREGON JULY 10, 1993 LEWIS H. WARDROP
Expires 6/30/14

APPROVALS:

SUPERVISING ENGINEER — REG. PROF. ENGR. NO. 16399PE

CITY ENGINEER — REG. PROF. ENGR. NO. 51538PE

CITY OF PORTLAND BUREAU OF TRANSPORTATION

CHARLIE HALES — MAYOR
STEVE TOWNSEN, P.E. — CITY ENGINEER

CITY OF PORTLAND OREGON 1851

NE/SE 50s Bikeway: NE Thompson to SE Woodstock

MULTNOMAH COUNTY

Permanent Signing & Striping Plan
Sta. "53" 330+09.76 to
Sta. "53" 336+39.75

SHEET NO. S-34

Plot Date: 4/1/2013 1:37:49 PM Filename: S:_ILDesign\T00121- 50's Bikeway Woodstock Blvd-Thompson St, SE-NE\CAD\PLAN_SHEETS\SHT S-34 PERMANENT SIGNING AND STRIPING PLAN\PLOT_SHT_S-34.dgn

Bid Documents

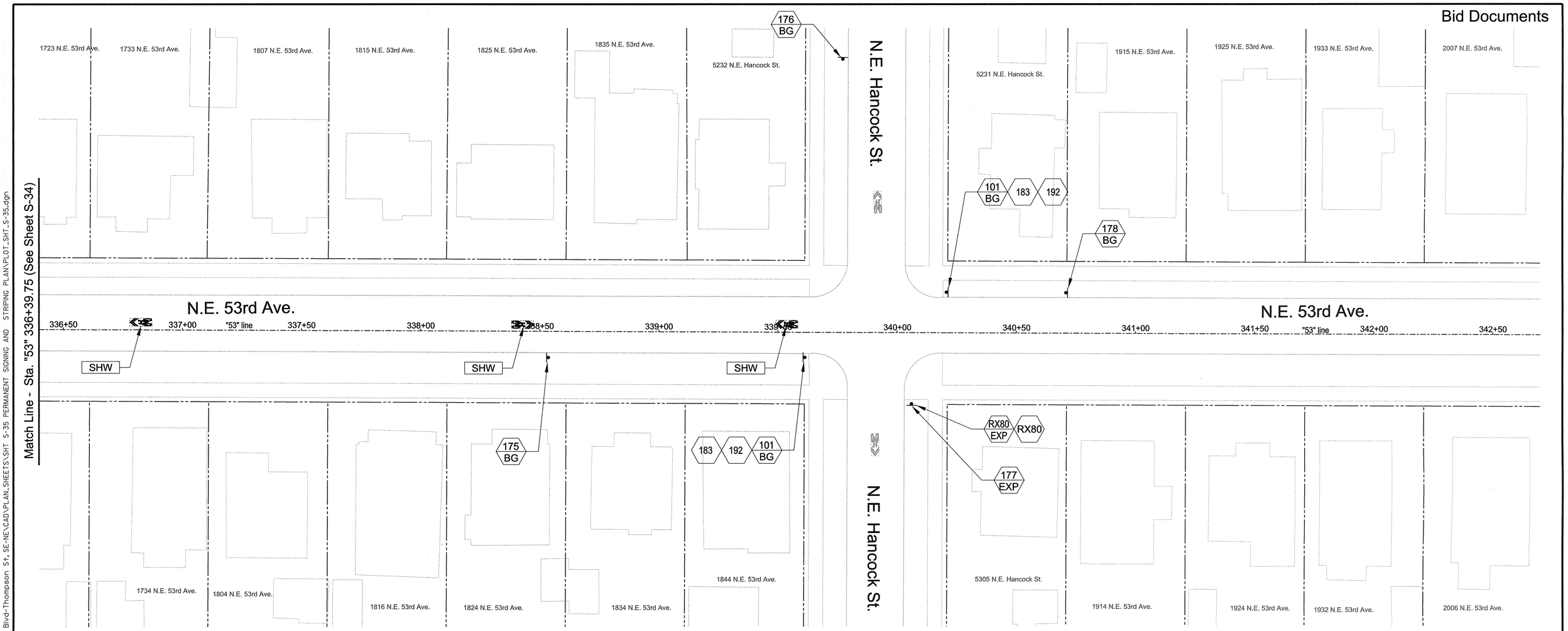

Signing Notes:

1.) Refer to traffic sign bubble and traffic sign number legends shown on sheets S-43 thru S-45.

2.) Refer to signing details shown on "P-" sheets.

3.) Contractor to coordinate with TriMet to relocate signs.

Striping Notes:

1.) Remove all conflicting striping and pavement markings.

2.) Refer to pavement marking standard detail blocks shown on "P-" sheets and "TM" sheets.

3.) All longitudinal line work to be paint except for W-2 turn lane markings.

4.) All W-2 turn lane markings to be non-profile, 120 mil., extruded thermoplastic.

5.) All S and CW transverse line work to be Type "A" thermoplastic.

6.) All legend, symbols, arrows and CW-SC transverse line work to be Type "B-HS" thermoplastic.

0 20 40 60 80
FEET

NO.	DATE	DESCRIPTION	APPD.
		REVISION	

DESIGNED BY	DATE APPROVED	
A. Sullivan	Apr. 2013	
CAD BY: D. Ramer, C. Shearer		PROJECT NO. T00121
CHECKED BY: J. Tower		1/4 SECTION 2836,2936,3036, 3136,3236,3336, 3436,3536,3636
PROJECT NUMBER STP-5900(246)		

REGISTERED PROFESSIONAL ENGINEER 16399PE OREGON JULY 10, 1993 LEWIS H. WARDHIP
Expires 6/30/14

APPROVALS:

SUPERVISING ENGINEER — REG. PROF. ENGR. NO. 16399PE

CITY ENGINEER — REG. PROF. ENGR. NO. 51538PE

CITY OF PORTLAND BUREAU OF TRANSPORTATION

CHARLIE HALES, MAYOR
STEVE TOWNSEN, P.E., CITY ENGINEER

NE/SE 50s Bikeway: NE Thompson to SE Woodstock

MULTNOMAH COUNTY

Permanent Signing & Striping Plan
Sta. "53" 336+39.75 to
Sta. "53" 342+69.75

SHEET NO. S-35

Filename: S:_II_Design\T00121 - 50's Bikeway Woodstock Blvd-Thompson St, SE-NE\CAD\PLAN_SHEETS\SHT S-35 PERMANENT SIGNING AND STRIPING PLAN\PLOT_SHT_S-35.dgn

Plot Date: 4/1/2013 1:37:50 PM

Bid Documents

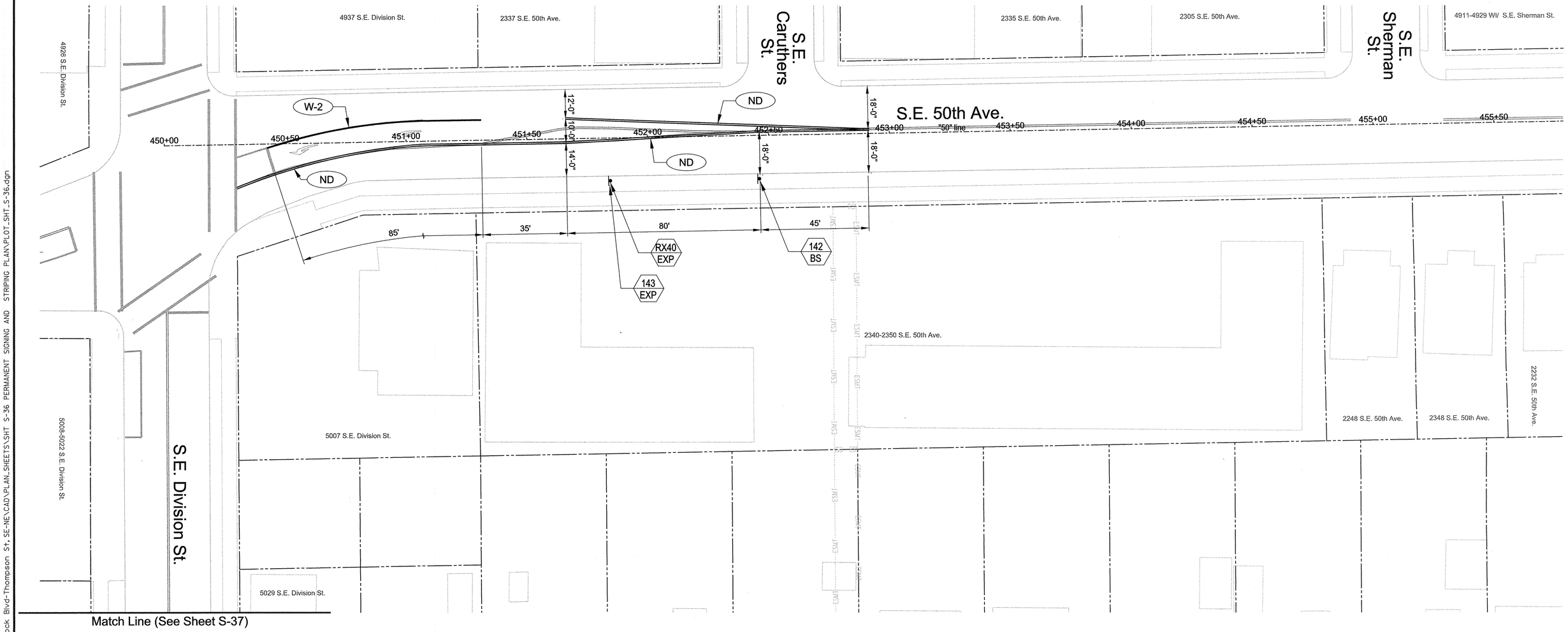

Signing Notes:

1.) Refer to traffic sign bubble and traffic sign number legends shown on sheets S-43 thru S-45.

2.) Refer to signing details shown on "P-" sheets.

3.) Contractor to coordinate with TriMet to relocate signs.

Striping Notes:

1.) Remove all conflicting striping and pavement markings.

2.) Refer to pavement marking standard detail blocks shown on "P-" sheets and "TM" sheets.

3.) All longitudinal line work to be paint except for W-2 turn lane markings.

4.) All W-2 turn lane markings to be non-profile, 120 mil., extruded thermoplastic.

5.) All S and CW transverse line work to be Type "A" thermoplastic.

6.) All legend, symbols, arrows and CW-SC transverse line work to be Type "B-HS" thermoplastic.

0 20 40 60 80
FEET

NO.	DATE	DESCRIPTION	APPD.

REVISION

DESIGNED BY A. Sullivan	DATE APPROVED Apr. 2013	
CAD BY D. Ramer C. Shearer		PROJECT NO. T00121
CHECKED BY J. Tower		1/4 SECTION 2836,2936,3036 3136,3236,3336 3436,3536,3636
PROJECT NUMBER STP-5900(246)		

REGISTERED PROFESSIONAL ENGINEER 16399PE OREGON JULY 10, 1993 LEWIS H. WARDRIP
Expires 6/30/14

APPROVALS:

SUPERVISING ENGINEER — REG. PROF. ENGR. NO. 16399PE

CITY ENGINEER — REG. PROF. ENGR. NO. 51538PE

CITY OF PORTLAND BUREAU OF TRANSPORTATION

CHARLIE HALES
STEVE TOWNSEN, P.E.

MAYOR
CITY ENGINEER

CITY OF PORTLAND, OREGON 1851

NE/SE 50s Bikeway: NE Thompson to SE Woodstock

MULTNOMAH COUNTY

Permanent Signing & Striping Plan
Sta. "50" 450+00.00 to
Sta. "50" 450+78.67

SHEET NO. S-36

Plot Date: 4/1/2013 1:37:51 PM Filename: S:_IL_Design\T00121 - 50's Bikeway Woodstock Blvd-Thompson St, SE-NE\CAD\PLAN_SHEETS\SHT S-36 PERMANENT SIGNING AND STRIPING PLAN\PLOT_SHT_S-36.dgn

Match Line - Sta. "xx" xx+xx.xx (See Sheet S-36)

Bid Documents

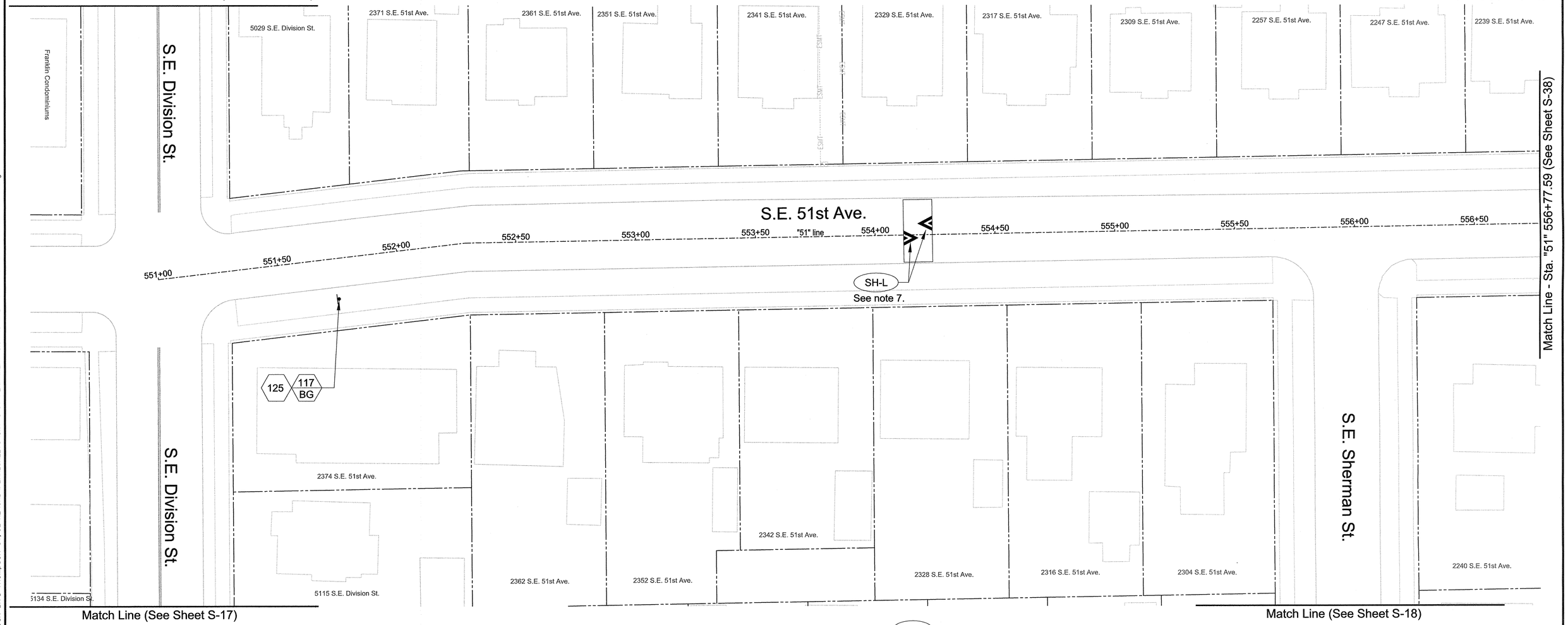

Signing Notes:

1.) Refer to traffic sign bubble and traffic sign number legends shown on sheets S-43 thru S-45.

2.) Refer to signing details shown on "P-" sheets.

3.) Contractor to coordinate with TriMet to relocate signs.

Striping Notes:

1.) Remove all conflicting striping and pavement markings.

2.) Refer to pavement marking standard detail blocks shown on "P-" sheets and "TM" sheets.

3.) All longitudinal line work to be paint except for W-2 turn lane markings.

4.) All W-2 turn lane markings to be non-profile, 120 mil., extruded thermoplastic.

5.) All S and CW transverse line work to be Type "A" thermoplastic.

6.) All legend, symbols, arrows and CW-SC transverse line work to be Type "B-HS" thermoplastic.

7.) Refer to speed bump drawing. See Std. Drg. No. P-440.

0 20 40 60 80
FEET

NO.	DATE	DESCRIPTION	APPD.

REVISION

DESIGNED BY	DATE APPROVED	
A. Sullivan	Apr. 2013	
CAD BY D. Ramer C. Shearer		PROJECT NO. T00121
CHECKED BY J. Tower		1/4 SECTION 2636,2936,3036, 3136,3236,3336, 3436,3536,3636

PROJECT NUMBER
STP-5900(246)

REGISTERED PROFESSIONAL ENGINEER 16399PE OREGON JULY 10, 1993 LEWIS H. WARDHIP
Expires 6/30/14

APPROVALS:

SUPERVISING ENGINEER — REG. PROF. ENGR. NO. 16399PE

CITY ENGINEER — REG. PROF. ENGR. NO. 51538PE

CITY OF PORTLAND BUREAU OF TRANSPORTATION

CHARLIE HALES, MAYOR
STEVE TOWNSEN, P.E., CITY ENGINEER

CITY OF PORTLAND, OREGON 1851

NE/SE 50s Bikeway: NE Thompson to SE Woodstock

MULTNOMAH COUNTY

Permanent Signing & Striping Plan W/Speed Bumps
Sta. "51" 551+00.00 to Sta. "51" 556+77.59

SHEET NO. S-37

Plot Date: 4/1/2013 1:37:52 PM Filename: S:_ll_Design\T00121 - 50's Bikeway Woodstock Blvd-Thompson St, SE-NE\CAD\PLAN_SHEETS\SHT S-37 PERMANENT SIGNING AND STRIPING PLAN\PLOT_SHT_S-37.dgn

Bid Documents

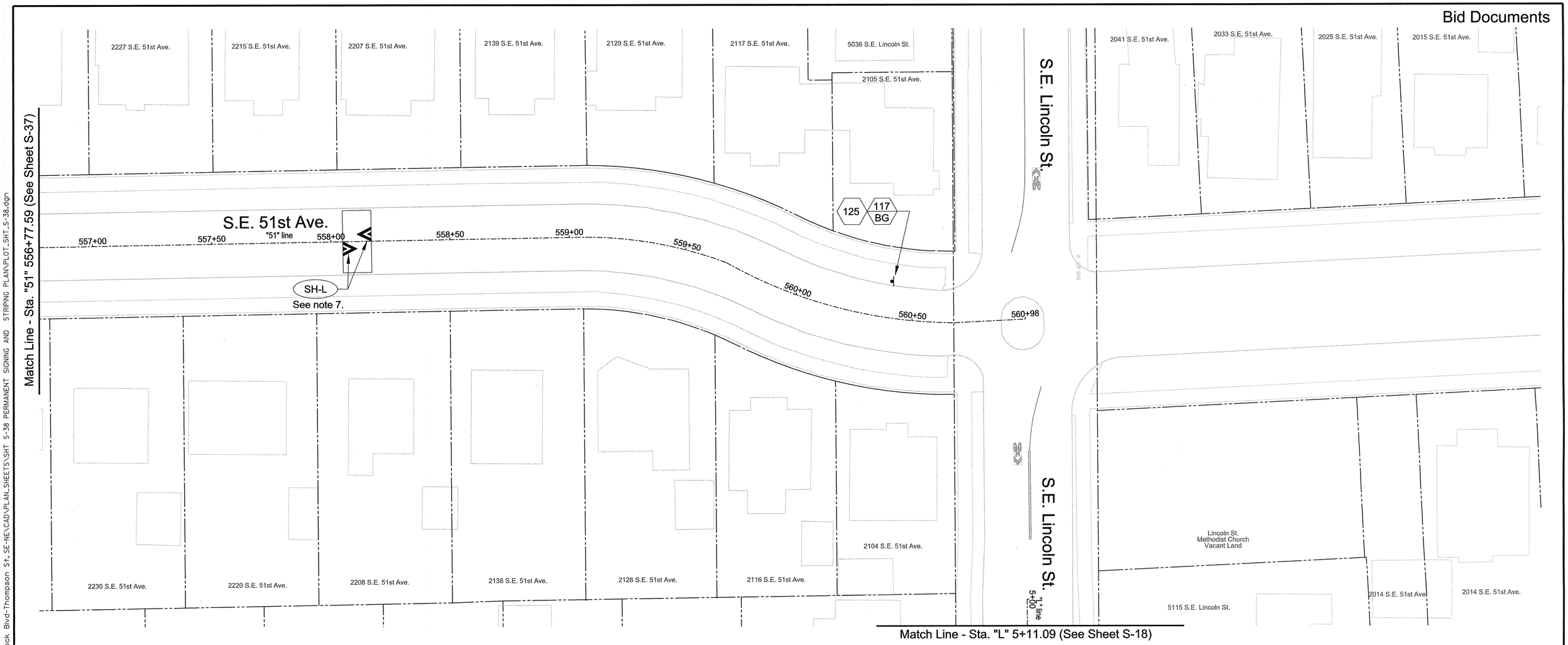

Signing Notes:

1.) Refer to traffic sign bubble legends and traffic sign number legends shown on sheets S-43 thru S-45.

2.) Refer to signing details shown on "P-" sheets.

3.) Contractor to coordinate with TriMet to relocate sign.

Striping Notes:

1.) Remove all conflicting striping and pavement markings.

2.) Refer to pavement marking standard detail blocks shown on "P-" sheets and "TM" sheets.

3.) All longitudinal line work to be paint except for W-2 turn lane markings.

4.) All W-2 turn lane markings to be non-profile, 120 mil., extruded thermoplastic.

5.) All S and CW transverse line work to be Type "A" thermoplastic.

6.) All legend, symbols, arrows and CW-SC transverse line work to be Type "B-HS" thermoplastic.

7.) Refer to speed bump drawing. See Std. Drg. No. P-440.

0 20 40 60 80
FEET

NO.	DATE	DESCRIPTION	APPD.

REVISION

DESIGNED BY A. Sullivan	DATE APPROVED Apr. 2013	
CAD BY D. Ramer C. Shearer		PROJECT NO. T00121
CHECKED BY J. Tower		1/4 SECTION 2836,2936,3036 3136,3236,3336 3436,3536,3636
PROJECT NUMBER STP-5900(246)		

REGISTERED PROFESSIONAL ENGINEER 16399PE OREGON JULY 10, 1993 LEWIS H. WARDROP
Expires 6/30/14

APPROVALS:

SUPERVISING ENGINEER — REG. PROF. ENGR. NO. 16399PE

CITY ENGINEER — REG. PROF. ENGR. NO. 51538PE

CITY OF PORTLAND BUREAU OF TRANSPORTATION

CHARLIE HALES
STEVE TOWNSEN, P.E.

MAYOR
CITY ENGINEER

CITY OF PORTLAND OREGON 1851

NE/SE 50s Bikeway: NE Thompson to SE Woodstock

MULTNOMAH COUNTY

Permanent Signing & Striping Plan W/Speed Bumps
Sta. "51" 551+00.00 to Sta. "51" 560+98.00

SHEET NO. S-38

Plot Date: 4/1/2013 1:37:53 PM Filename: S:_ILDesign\T00121- 50's Bikeway Woodstock Blvd-Thompson St, SE-NE\CAD\PLAN_SHEETS\SHT S-38 PERMANENT SIGNING AND STRIPING PLAN\PLOT_SHT_S-38.dgn

Match Line (See Sheet S-17)

Match Line (See Sheet S-18)

Bid Documents

Match Line (See Sheet S-41)

Match Line (See Sheet S-42)

Signing Notes:

1.) Refer to traffic sign bubble and traffic sign number legends shown on sheets S-43 thru S-45.

2.) Refer to signing details shown on "P-" sheets.

3.) Contractor to coordinate with TriMet to relocate signs.

4.) Install signs 101 with sign flags. Remove sign flags after 30 days.

Striping Notes:

1.) Remove all conflicting striping and pavement markings.

2.) Refer to pavement marking standard detail blocks shown on "P-" sheets and "TM" sheets.

3.) All longitudinal line work to be paint except for W-2 turn lane markings.

4.) All W-2 turn lane markings to be non-profile, 120 mil., extruded thermoplastic.

5.) All S and CW transverse line work to be Type "A" thermoplastic.

6.) All legend, symbols, arrows and CW-SC transverse line work to be Type "B-HS" thermoplastic.

7.) Refer to speed bump drawing. See Std. Drg. No. P-440.

0 20 40 60 80
FEET

NO.	DATE	DESCRIPTION	APPD.

REVISION

DESIGNED BY	DATE APPROVED	
A. Sullivan	Apr. 2013	
CAD BY D. Ramer C. Shearer		PROJECT NO. T00121
CHECKED BY J. Tower		1/4 SECTION 2836,2936,3036, 3136,3236,3336, 3436,3536,3636

PROJECT NUMBER
STP-5900(246)

REGISTERED PROFESSIONAL ENGINEER 16399PE OREGON JULY 10, 1993 LEWIS H. WARDROP
Expires 6/30/14

APPROVALS:

SUPERVISING ENGINEER — REG. PROF. ENGR. NO. 16399PE

CITY ENGINEER — REG. PROF. ENGR. NO. 51538PE

CITY OF PORTLAND BUREAU OF TRANSPORTATION

CHARLIE HALES, MAYOR
STEVE TOWNSEN, P.E., CITY ENGINEER

CITY OF PORTLAND OREGON 1851

NE/SE 50s Bikeway: NE Thompson to SE Woodstock

MULTNOMAH COUNTY

Permanent Signing & Striping Plan W/Speed Bumps
Sta. "53" 253+00.00 to Sta. "53" 258+73.35

SHEET NO. S-39

Plot Date: 4/1/2013 1:37:54 PM Filename: S:_IL Design\T00121 - 50's Bikeway Woodstock Blvd-Thompson St, SE-NE\CAD\PLAN_SHEETS\SHT S-39 PERMANENT SIGNING AND STRIPING PLAN\PLOT_SHT_S-39.dgn

Bid Documents

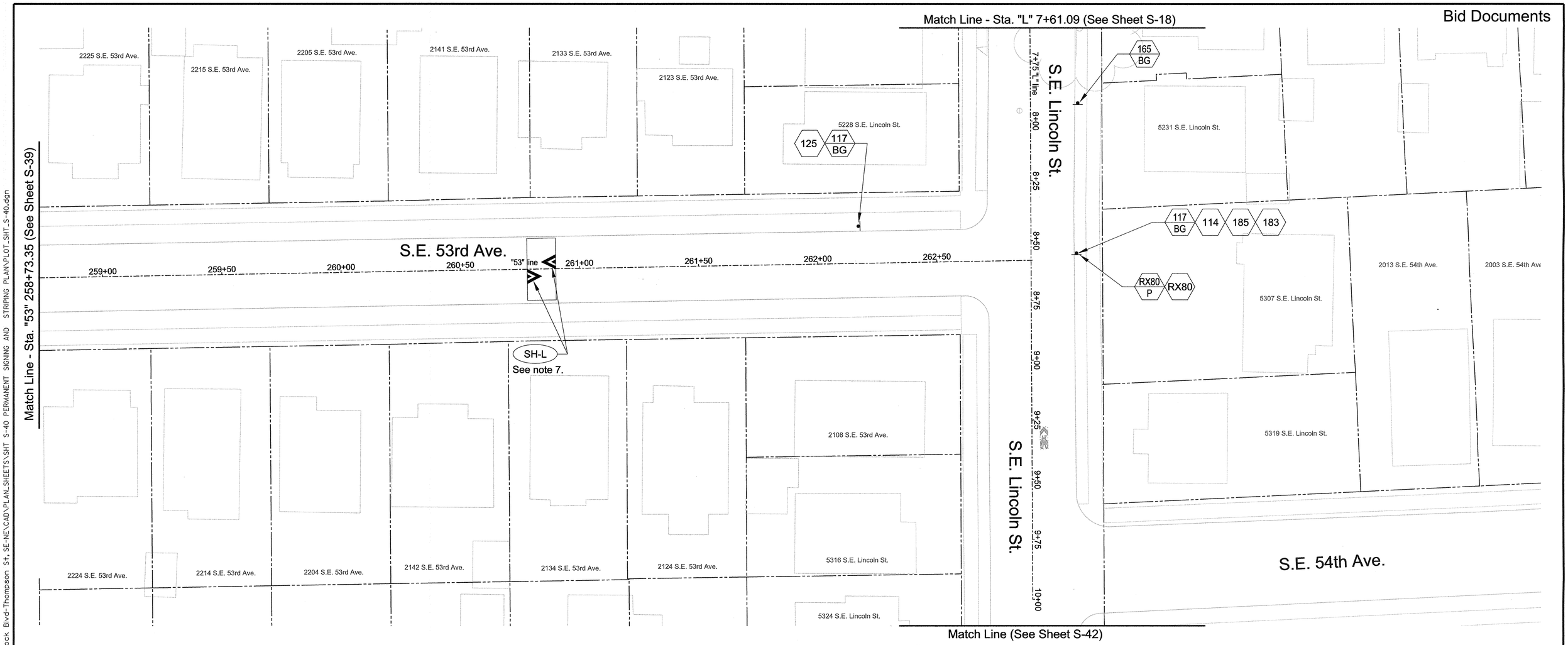

Signing Notes:

1.) Refer to traffic sign bubble and traffic sign number legends shown on sheets S-43 thru S-45.

2.) Refer to signing details shown on "P-" sheets.

3.) Contractor to coordinate with TriMet to relocate signs.

Striping Notes:

1.) Remove all conflicting striping and pavement markings.

2.) Refer to pavement marking standard detail blocks shown on "P-" sheets and "TM" sheets.

3.) All longitudinal line work to be paint except for W-2 turn lane markings.

4.) All W-2 turn lane markings to be non-profile, 120 mil., extruded thermoplastic.

5.) All S and CW transverse line work to be Type "A" thermoplastic.

6.) All legend, symbols, arrows and CW-SC transverse line work to be Type "B-HS" thermoplastic.

7.) Refer to speed bump drawing. See Std. Drg. No. P-440.

0 20 40 60 80
FEET

NO.	DATE	DESCRIPTION	APPD.
		REVISION	

DESIGNED BY A. Sullivan	DATE APPROVED Apr. 2013	
CAD BY D. Ramer C. Shearer		PROJECT NO. T00121
CHECKED BY J. Tower		1/4 SECTION 2836,2936,3036 3136,3236,3336 3436,3536,3636
PROJECT NUMBER STP-5900(246)		

REGISTERED PROFESSIONAL ENGINEER 16399PE OREGON JULY 10, 1985 LEWIS H. WARDROP
Expires 6/30/14

APPROVALS:

SUPERVISING ENGINEER — REG. PROF. ENGR. NO. 16399PE

CITY ENGINEER — REG. PROF. ENGR. NO. 51538PE

CITY OF PORTLAND BUREAU OF TRANSPORTATION

CHARLIE HALES, MAYOR
STEVE TOWNSEN, P.E., CITY ENGINEER

CITY OF PORTLAND, OREGON 1851

NE/SE 50s Bikeway: NE Thompson to SE Woodstock

MULTNOMAH COUNTY

Permanent Signing & Striping Plan W/Speed Bumps
Sta. "53" 258+73.35 to Sta. "53" 262+90.01

SHEET NO. S-40

Plot Date: 4/1/2013 1:37:55 PM Filename: S:_Il_Design\T00121 - 50's Bikeway Woodstock Blvd-Thompson St, SE-NE\CAD\PLAN_SHEETS\SHT S-40 PERMANENT SIGNING AND STRIPING PLAN\PLOT_SHT_S-40.dgn

Bid Documents

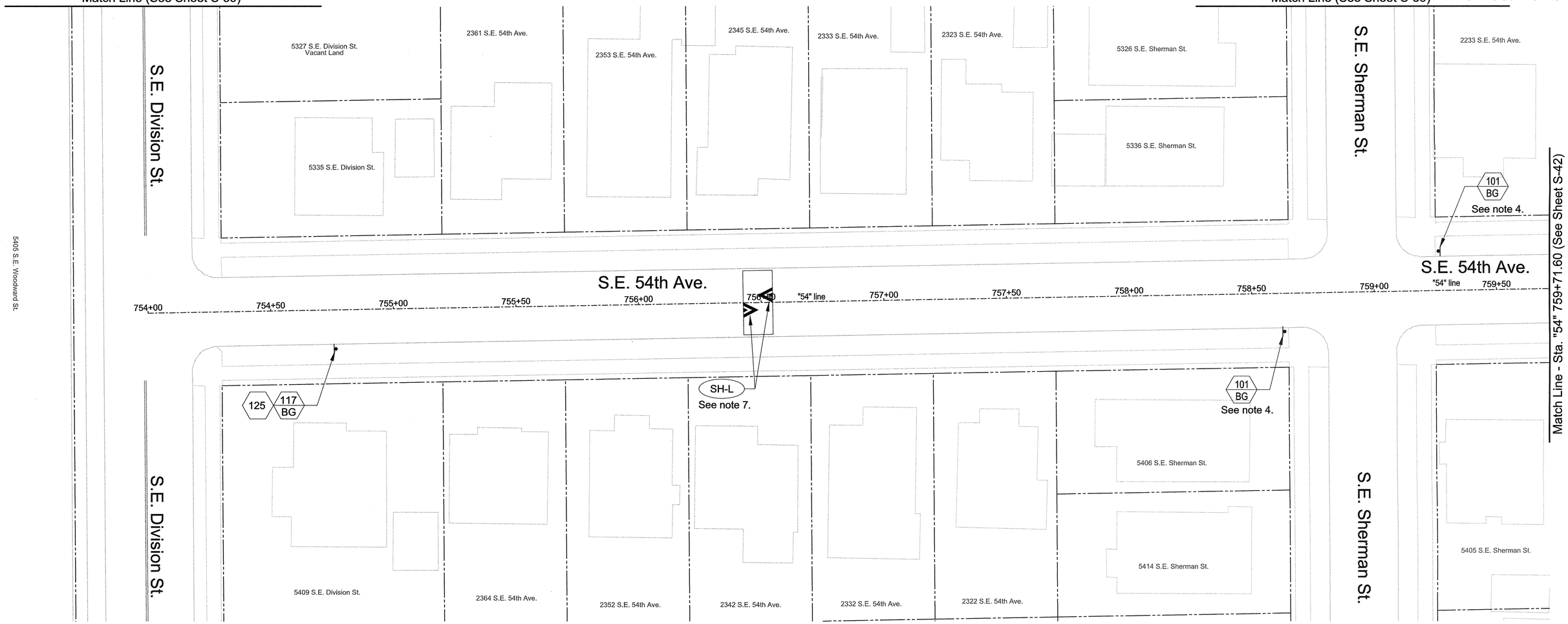

Signing Notes:

1.) Refer to traffic sign bubble and traffic sign number legends shown on sheets S-43 thru S-45.

2.) Refer to signing details shown on "P-" sheets.

3.) Contractor to coordinate with TriMet to relocate signs.

4.) Install signs 101 with sign flags. Remove sign flags after 30 days.

Striping Notes:

1.) Remove all conflicting striping and pavement markings.

2.) Refer to pavement marking standard detail blocks shown on "P-" sheets and "TM" sheets.

3.) All longitudinal line work to be paint except for W-2 turn lane markings.

4.) All W-2 turn lane markings to be non-profile, 120 mil., extruded thermoplastic.

5.) All S and CW transverse line work to be Type "A" thermoplastic.

6.) All legend, symbols, arrows and CW-SC transverse line work to be Type "B-HS" thermoplastic.

7.) Refer to speed bump drawing. See Std. Drg. No. P-440.

0 20 40 60 80
FEET

NO.	DATE	DESCRIPTION	APPD.
		REVISION	

DESIGNED BY A. Sullivan	DATE APPROVED Apr. 2013	
CAD BY D. Ramer C. Shearer		PROJECT NO. T00121
CHECKED BY J. Tower		1/4 SECTION 2836,2936,3036 3136,3236,3336 3436,3536,3636
PROJECT NUMBER STP-5900(246)		

REGISTERED PROFESSIONAL ENGINEER 16399PE OREGON JULY 10, 1997 LEWIS H. WARDRIP
Expires 6/30/14

APPROVALS:

SUPERVISING ENGINEER — REG. PROF. ENGR. NO. 16399PE

CITY ENGINEER — REG. PROF. ENGR. NO. 51538PE

CITY OF PORTLAND BUREAU OF TRANSPORTATION

CHARLIE HALES, MAYOR
STEVE TOWNSEN, P.E., CITY ENGINEER

CITY OF PORTLAND OREGON 1851

NE/SE 50s Bikeway: NE Thompson to SE Woodstock

MULTNOMAH COUNTY

Permanent Signing & Striping Plan W/Speed Bumps
Sta. "54" 754+00.00 to Sta. "54" 759+71.60

SHEET NO. S-41

Plot Date: 4/1/2013 4:37:56 PM Filename: S:_II_Design\T00121- 50's Bikeway Woodstock Blvd-Thompson St, SE-NE\CAD\PLAN_SHEETS\SHT S-41PERMANENT SIGNING AND STRIPING PLAN\PLOT_SHT_S-41.dgn

Bid Documents

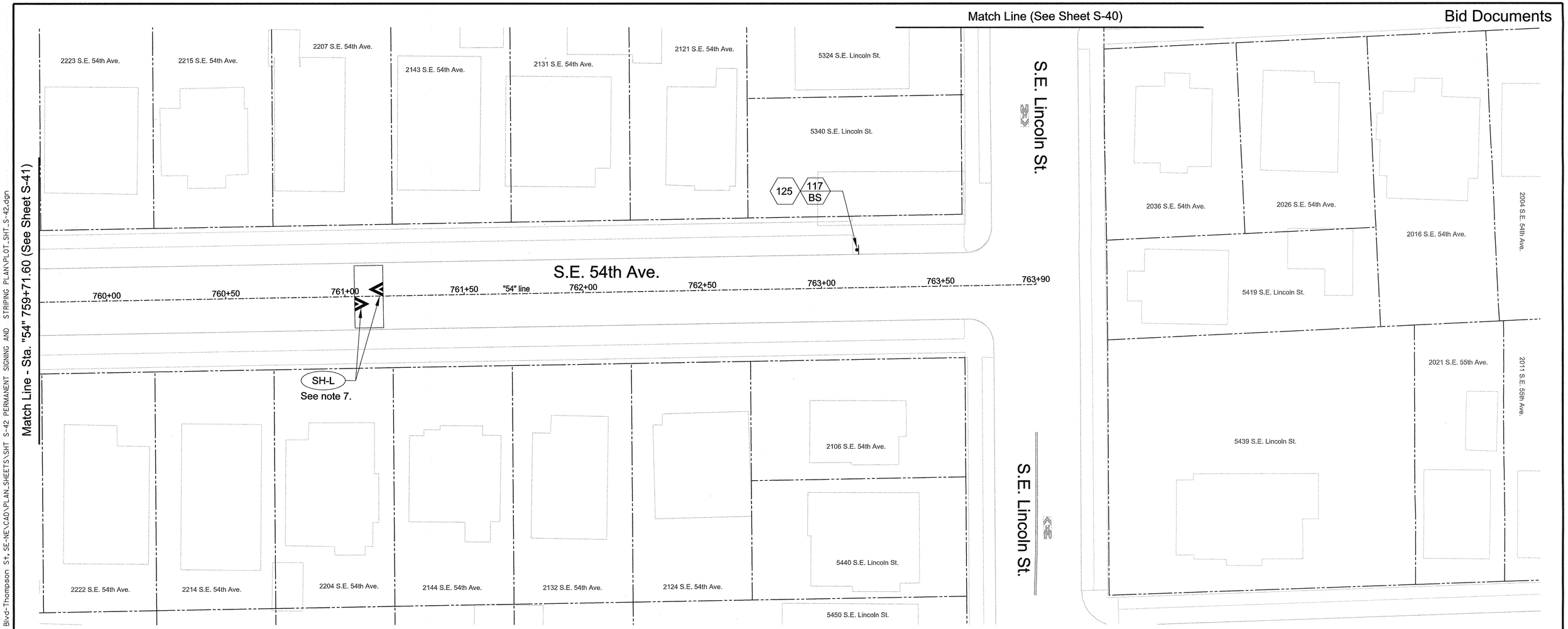

Signing Notes:

1.) Refer to traffic sign bubble and traffic sign number legends shown on sheets S-43 thru S-45.

2.) Refer to signing details shown on "P-" sheets.

3.) Contractor to coordinate with TriMet to relocate signs.

Striping Notes:

1.) Remove all conflicting striping and pavement markings.

2.) Refer to pavement marking standard detail blocks shown on "P-" sheets and "TM" sheets.

3.) All longitudinal line work to be paint except for W-2 turn lane markings.

4.) All W-2 turn lane markings to be non-profile, 120 mil., extruded thermoplastic.

5.) All S and CW transverse line work to be Type "A" thermoplastic.

6.) All legend, symbols, arrows and CW-SC transverse line work to be Type "B-HS" thermoplastic.

7.) Refer to speed bump drawing. See Std. Drg. No. P-440.

0 20 40 60 80
FEET

NO.	DATE	DESCRIPTION	APPD.

REVISION

DESIGNED BY	DATE APPROVED	
A. Sullivan	Apr. 2013	
CAD BY D. Ramer C. Shearer		PROJECT NO. T00121
CHECKED BY J. Tower		1/4 SECTION 2836,2936,3036 3136,3236,3336 3436,3536,3636

PROJECT NUMBER
STP-5900(246)

REGISTERED PROFESSIONAL ENGINEER 16399PE OREGON JULY 10, 1993 LEWIS H. WARDRIP
Expires 6/30/14

APPROVALS:

SUPERVISING ENGINEER — REG. PROF. ENGR. NO. 16399PE

CITY ENGINEER — REG. PROF. ENGR. NO. 51538PE

CITY OF PORTLAND BUREAU OF TRANSPORTATION

CHARLIE HALES
STEVE TOWNSEN, P.E.

MAYOR
CITY ENGINEER

CITY OF PORTLAND OREGON 1851

NE/SE 50s Bikeway: NE Thompson to SE Woodstock

MULTNOMAH COUNTY

Permanent Signing & Striping Plan W/Speed Bumps
Sta. "54" 759+71.60 to Sta. "54" 763+90.00

SHEET NO. S-42

Plot Date: 4/1/2013 1:37:57 PM Filename: S:_ILDesign\T00121 - 50's Bikeway Woodstock Blvd-Thompson St, SE-NE\CAD\PLAN_SHEETS\SHT S-42 PERMANENT SIGNING AND STRIPING PLAN\PLOT_SHT_S-42.dgn

Traffic Sign Bubble Legend

N	Install new sign (N)
N / M	Install new sign (N) on new (M) sign support
N / EXM	Install new sign (N) on on existing sign support (M) sign support
RIN	Reinstall existing sign (N)
RIN / M	Reinstall existing sign (N) on new (M) sign support
RIN / RIM	Reinstall existing sign (N) and reinstall existing sign support (M)
RXN	Remove existing sign (N)
RXN / M	Remove existing sign (N) and sign support (M)
RSN	Remove and save existing sign (N)
RSN / M	Remove and save existing sign (N) and remove sign support (M)
RXN / EXM	Remove and save existing sign (N) and maintain and protect existing sign support (M)
RSN / EXM	Remove and save existing sign (N) and protect existing sign support (M)
RSN / RSM	Remove and save existing sign (N) and remove and save existing sign support (M)
RX / N	Remove existing sign support (N)
EXN	Maintain and protect existing sign (N) and support (M)

N = Sig Number, See "Traffic Signs" Legend for the numbers.

M = Material for Pole or Post

Material options are: BG = Breakaway Post in Ground BS = Breakaway Post in Sidewalk
LP = Light Pole P = Pipe Post PP = Power Pole
SP = Signal Pole UP = Utility Pole W = Wood Post

Traffic Sign Number Legend

Sign No. 1
R1010
R1-1
30x30

Sign No. 3
R2030
OR2-1
30x30

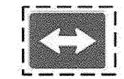

Sign No. 20
S3250
M7-5
12x9

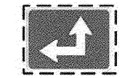

Sign No. 21
S3280
M7-6L
12x9

Sign No. 22
S3260
M7-6R
12x9

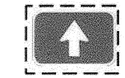

Sign No. 23
S3380
M7-2
12x9

Sign No. 24
S3000
D11-1
24x18

Sign No. 15
W3210
W11-2
30x30

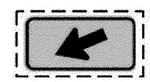

Sign No. 16
S1105
S1-1
24x12

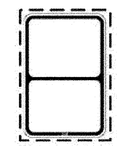

Sign No. 40
P0000

12x18

Sign No. 41
P1000L

12x18

Sign No. 42
P1000R

12x18

Sign No. 46
P3800L

12x18

Sign No. 47
P2500L

12x18

Sign No. 48
P1200L

12x18

Sign No. 49
P1220

12x18

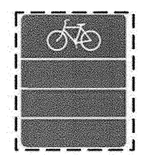

Sign No. 50
S5000

24x30

Sign No. 51
P1200R

12x18

Sign No. 52
P3150

12x18

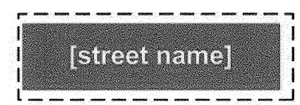

Sign No. 80
G5500

8xVaries

Sign No. 93

8x20

Denotes
Existing
Sign

NO.	DATE	DESCRIPTION	APPD.

REVISION

DESIGNED BY A. Sullivan	DATE APPROVED Apr. 2013	
CAD BY D. Ramer C. Shearer		PROJECT NO. T00121
CHECKED BY J. Tower		1/4 SECTION
PROJECT NUMBER STP-5900(246)		

REGISTERED PROFESSIONAL ENGINEER 16399PE OREGON JULY 10, 1993 LEWIS H. WARDRIP
Expires 6/30/14

APPROVALS:

SUPERVISING ENGINEER — REG. PROF. ENGR. NO. 16399PE

CITY ENGINEER — REG. PROF. ENGR. NO. 51538PE

CITY OF PORTLAND BUREAU OF TRANSPORTATION

CHARLIE HALES, MAYOR
STEVE TOWNSEN, P.E., CITY ENGINEER

NE/SE 50s Bikeway: NE Thompson to SE Woodstock

MULTNOMAH COUNTY

Permanent Signing Legends Existing Signs

SHEET NO. S-43

Plot Date: 4/1/2013 1:37:58 PM Filename: S:_II_Design\T00121 - 50's Bikeway Woodstock Blvd-Thompson St, SE-NE\CAD\PLAN_SHEETS\SHT S-43 PERMANENT SIGNING LEGEND EXISTING SIGNS\PLOT_SHT_S-43.dgn

Traffic Sign Bubble Legend

N	Install new sign (N)
N / M	Install new sign (N) on new (M) sign support
N / EXM	Install new sign (N) on on existing sign support (M) sign support
RIN	Reinstall existing sign (N)
RIN / M	Reinstall existing sign (N) on new (M) sign support
RIN / RIM	Reinstall existing sign (N) and reinstall existing sign support (M)
RXN	Remove existing sign (N)
RXN / M	Remove existing sign (N) and sign support (M)
RSN	Remove and save existing sign (N)
RSN / M	Remove and save existing sign (N) and remove sign support (M)
RXN / EXM	Remove and save existing sign (N) and maintain and protect existing sign support (M)
RSN / EXM	Remove and save existing sign (N) and protect existing sign support (M)
RSN / RSM	Remove and save existing sign (N) and remove and save existing sign support (M)
RX / N	Remove existing sign support (N)
EXN	Maintain and protect existing sign (N) and support (M)

N = Sig Number, See "Traffic Signs" Legend for the numbers.

M = Material for Pole or Post

Material options are: BG = Breakaway Post in Ground BS = Breakaway Post in Sidewalk
LP = Light Pole P = Pipe Post PP = Power Pole
SP = Signal Pole UP = Utility Pole W = Wood Post

Traffic Sign Number Legend

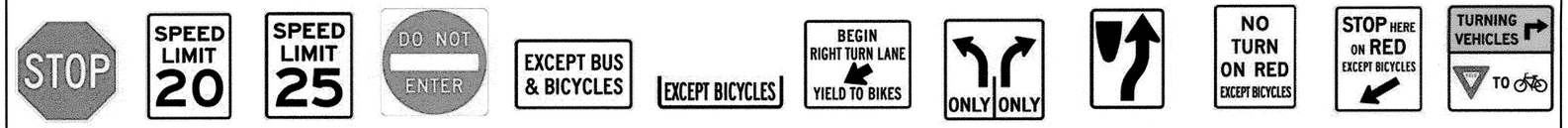

Sign No. 101 R1010 R1-1 30x30
Sign No. 102 R2015 OR2-1 30x36
Sign No. 103 R2035 OR2-1 30x36
Sign No. 104 R5100 R5-1 30x30
Sign No. 105 R3970 30x18
Sign No. 106 R3940 30x8
Sign No. 107 R3990 36x30
Sign No. 108 R3800 30x30
Sign No. 109 R5438 R10-6 18x24
Sign No. 110 R4420 R10-11B 24x30
Sign No. 111 R4022 R10-6 30x36
Sign No. 112 R4600R R10-15mod 30x30

Sign No. 113 R4023 R1-5b 36x36
Sign No. 114 W3262 OBW8-23 36x36
Sign No. 116 S1105 S1-1 24x12
Sign No. 117 S1108 W16-9P 24x12
Sign No. 118 W2340 12x48
Sign No. 119 S3701 OBW1-9 30x30
Sign No. 125 W2610 30x30
Sign No. 126 R4611 R10-15L 30x30

Sign No. 141 P1000L 12x18
Sign No. 142 P1000R 12x18
Sign No. 143 P1000D 12x18
Sign No. 144 P2500L 12x18
Sign No. 145 P2500R 12x18
Sign No. 146 P1060 12x18
Sign No. 147 P3700R 12x18

New SNS

Sign No.	Street	Block
181	SE 52nd Av	-
182	SE 53rd Av	-
183	NE 53rd Av	-
184	SE Woodward St	2900
185	SE Lincoln St	2100
186	SE Hawthorne Blvd	1500
187	SE Salmon St	1200
188	SE Belmont St	900
189	SE Washington St	600
190	SE Stark St	500
191	E Burnside St	000
192	NE Hancock St	1900

NO.	DATE	DESCRIPTION	APPD.

REVISION

DESIGNED BY A. Sullivan | DATE APPROVED Apr. 2013
CAD BY D. Ramer C. Shearer | PROJECT NO. T00121
CHECKED BY J. Tower | 1/4 SECTION
PROJECT NUMBER STP-5900(246)

REGISTERED PROFESSIONAL ENGINEER 16399PE OREGON JULY 10, 1993 LEWIS H. WARDHIP
Expires 6/30/14

APPROVALS:
SUPERVISING ENGINEER — REG. PROF. ENGR. NO. 16399PE
CITY ENGINEER — REG. PROF. ENGR. NO. 51538PE

CITY OF PORTLAND BUREAU OF TRANSPORTATION
CHARLIE HALES, MAYOR
STEVE TOWNSEN, P.E., CITY ENGINEER

NE/SE 50s Bikeway: NE Thompson to SE Woodstock
MULTNOMAH COUNTY
Permanent Signing Legends New Signs
SHEET NO. S-44

Plot Date: 4/1/2013 1:38:28 PM Filename: S:_II_Design\T00121 - 50's Bikeway Woodstock Blvd-Thompson St, SE-NE\CAD\PLAN_SHEETS\SHT S-44 PERMANENT SIGNING LEGEND NEW SIGNS\PLOT_SHT_S-44.dgn

Traffic Sign Bubble Legend

N	Install new sign (N)
N / M	Install new sign (N) on new (M) sign support
N / EXM	Install new sign (N) on on existing sign support (M) sign support
RIN	Reinstall existing sign (N)
RIN / M	Reinstall existing sign (N) on new (M) sign support
RIN / RIM	Reinstall existing sign (N) and reinstall existing sign support (M)
RXN	Remove existing sign (N)
RXN / M	Remove existing sign (N) and sign support (M)
RSN	Remove and save existing sign (N)
RSN / M	Remove and save existing sign (N) and remove sign support (M)
RXN / EXM	Remove and save existing sign (N) and maintain and protect existing sign support (M)
RSN / EXM	Remove and save existing sign (N) and protect existing sign support (M)
RSN / RSM	Remove and save existing sign (N) and remove and save existing sign support (M)
RX / N	Remove existing sign support (N)
EXN	Maintain and protect existing sign (N) and support (M)

N = Sig Number, See "Traffic Signs" Legend for the numbers.

M = Material for Pole or Post

Material options are: BG = Breakaway Post in Ground BS = Breakaway Post in Sidewalk
LP = Light Pole P = Pipe Post PP = Power Pole
SP = Signal Pole UP = Utility Pole W = Wood Post

Traffic Sign Number Legend

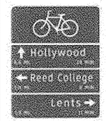

Sign No. 151
S5001_151
24x30

Sign No. 152
S5001_152
24x36

Sign No. 153
S5001_153
24x36

Sign No. 154
S5001_154
24x36

Sign No. 155
S5001_155
24x36

Sign No. 156
S5001_156
24x36

Sign No. 157
S5001_157
24x30

Sign No. 158
S5001_158
24x36

Sign No. 159
S5001_159
24x36

Sign No. 160
S5001_160
24x30

Sign No. 161
S5001_161
24x36

Sign No. 162
S5001_162
24x36

Sign No. 163
S5001_163
24x30

Sign No. 164
S5001_164
24x30

Sign No. 165
S5001_165
24x30

Sign No. 166
S5001_166
24x30

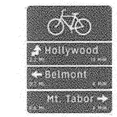

Sign No. 167
S5001_167
24x30

Sign No. 168
S5001_168
24x30

Sign No. 169
S5001_169
24x30

Sign No. 170
S5001_170
24x30

Sign No. 171
S5001_171
24x30

Sign No. 172
S5001_172
24x30

Sign No. 173
S5001_173
24x30

Sign No. 174
S5001_174
24x30

Sign No. 175
S5001_175
24x30

Sign No. 176
S5001_176
24x30

Sign No. 177
S5001_177
24x30

Sign No. 178
S5001_178
24x30

NO.	DATE	DESCRIPTION	APPD.

REVISION

DESIGNED BY A. Sullivan	DATE APPROVED Apr. 2013	
CAD BY D. Ramer C. Shearer		PROJECT NO. T00121
CHECKED BY J. Tower		1/4 SECTION
PROJECT NUMBER STP-5900(246)		

REGISTERED PROFESSIONAL ENGINEER 16399PE OREGON JULY 10, 1992 LEWIS H. WARDRIP
Expires 6/30/14

APPROVALS:

SUPERVISING ENGINEER — REG. PROF. ENGR. NO. 16399PE

CITY ENGINEER — REG. PROF. ENGR. NO. 51538PE

CITY OF PORTLAND BUREAU OF TRANSPORTATION

CHARLIE HALES — MAYOR
STEVE TOWNSEN, P.E. — CITY ENGINEER

CITY OF PORTLAND OREGON 1851

NE/SE 50s Bikeway: NE Thompson to SE Woodstock

MULTNOMAH COUNTY

Permanent Signing Legends Wayfinding Signs

SHEET NO. S-45

Plot Date: 4/1/2013 1:38:54 PM Filename: S:_IL_Design\T00121- 50's Bikeway Woodstock Blvd-Thompson St, SE-NE\CAD\PLAN_SHEETS\SHT S-45 PERMANENT SIGNING LEGEND WAYFINDING SIGNS\PLOT_SHT_S-45.dgn

Bid Documents

SIGN AND POST DATA TABLE

SIGN NO.	SHEET NO.	LINE	SIGN LOCATION 1/ (STA. & DIR.)	SIGN DIMENSION: WIDTH (IN INCHES)	SIGN DIMENSION: HEIGHT (IN INCHES)	SIGN CODE: PBOT	SIGN CODE: ODOT	SIGN CODE: MUTCD	SIGN TYPE (PER SECS. 940 & 2910 COP STD. SPECS.)	SUB-STRATE: ALUM. COMPOSITE	SUB-STRATE: SHEET ALUM.	SUB-STRATE: EXTRUDED ALUM.	SIGN NO. 2/	TYPE OF SUPPORT – MOUNT: SINGLE PIPE POST	MOUNT: TWO PIPE POSTS	MOUNT: UTILITY POLE	MOUNT: LIGHT POLE	MOUNT: SIGNAL POLE	MOUNT: MAILBOX SUPPORT	MOUNT: TRIANGULAR BASE BREAKAWAY	MOUNT: SIGN BRIDGE	MOUNT: CANTILEVER	HARDWARE: U BOLT SIGN BRACKETS	HARDWARE: DOME POST CAP	HARDWARE: EXTRUDED TRAFFIC SIGN BRACKETS	HARDWARE: FLARED LEG BRACKETS	HARDWARE: STRAIGHT LEG BRACKETS	HARDWARE: BANDING AND BANDING CLIPS	HARDWARE: STRONG-BACK CHANNELS	HARDWARE: SINGLE SNS POST CAP (6")	HARDWARE: DOUBLE SNS CROSS PIECE (6")	HARDWARE: SINGLE SNS POST CAP (12")	HARDWARE: DOUBLE SNS CROSS PIECE (12")	HARDWARE: SNS CANTILEVER BRACKET	HARDWARE: SNS CANTILEVER EXTENSION	POST SIZE: IN INCHES (BASED ON ESTIMATED LENGTH)	POST LENGTH: IN INCHES (MUST BE FIELD VERIFIED)	FOOTING TYPE: BREAKAWAY DOME ASSEMBLY	FOOTING TYPE: BREAKAWAY ANCHOR ASSEMBLY	FOOTING: MIN. DEPTH 3/	REFER TO PBOT STD. DWG.: P-400	P-405	P-406	P-410	P-411	P-412	P-413	P-420	REFER TO ODOT STD. DWG.: TM602	TM675	TM680		REMARKS
1	S-18	"52"	168+74R	30	30	R1010		R1-1	EXIST.				1	X											X											2	116	X			X		X	X									
1	S-18	"52"	169+50L	30	30	R1010		R1-1	EXIST.				1	X											X											2	116		X		X	X		X									
1	S-25	"53"	276+62R	30	30	R1010		R1-1	EXIST.				1	X										X												2	116		X		X	X		X									
40	S-23	"BE"	12+23L	12	18	P2500R			EXIST.				40										X																		X			X									SAME MOUNT AS SIGN 116
40	S-34	"53"	330+31R	12	18	P1000R			W12	X			40										X																		X			X									SAME MOUNT AS SIGN 102
41	S-9	"52"	107+25L	12	18	P1000L			EXIST.				41	X									X	X												2	104		X		X	X		X									
42	S-27	"53"	289+79R	12	18	P1000R			EXIST.				42													X		X	X												X				X								SAME MOUNT A SIGN 101
42	S-30	"53"	305+78L	12	18	P1000R			EXIST.				42										X																		X			X									SAME MOUNT AS SIGN 101
46	S-15	"W"	3+86R	12	18	P3800L			EXIST.				46	X									X	X												2	104	X			X		X	X									
47	S-17	"52"	159+02R	12	18	P2500L			EXIST.				47	X									X	X												2	104		X		X	X		X									
48	S-27	"BU"	15+53L	12	18	P1200L			EXIST.				48	X									X	X												2	104	X			X		X	X									
49	S-27	"BU"	16+18R	12	18	P1220			EXIST.				49	X									X	X												2	104		X		X	X		X									
93	S-15	"W"	3+93L	VAR.	8	NONE			EXIST.				93																		X									X					X							SAME MOUNT AS SIGN 101
101	S-10	"52"	115+03R	30	30	R1010		R1-1	R		X		101												X															X			X									MOUNT TO EXISTING PIPE POST
101	S-13	"52"	136+04R	30	30	R1010		R1-1	R		X		101												X															X			X									MOUNT TO EXISTING PIPE POST
101	S-14	"52"	140+71L	30	30	R1010		R1-1	R		X		101												X															X			X									MOUNT TO EXISTING PIPE POST
101	S-15	"W"	3+14R	30	30	R1010		R1-1	R		X		101												X															X			X									MOUNT TO EXISTING PIPE POST
101	S-15	"W"	3+93L	30	30	R1010		R1-1	R		X		101												X															X			X									MOUNT TO EXISTING PIPE POST
101	S-22	"52"	191+56R	30	30	R1010		R1-1	R		X		101R	X											X											2	116		X		X	X		X									
101	S-22	"52"	192+07L	30	30	R1010		R1-1	R		X		101	X											X											2	116		X		X	X		X									
101	S-23	"52"	195+76R	30	30	R1010		R1-1	R		X		101	X										X	X											2	116		X		X	X		X									
101	S-23	"53"	263+15L	30	30	R1010		R1-1	R		X		101	X										X	X											2	116		X		X	X		X									
101	S-24	"53"	270+26L	30	30	R1010		R1-1	R		X		101												X															X			X									MOUNT TO EXISTING PIPE POST
101	S-25	"53"	274+27L	30	30	R1010		R1-1	R		X		101	X											X											2	116		X		X	X		X									
101	S-25	"53"	274+60R	30	30	R1010		R1-1	R		X		101	X											X											2	116		X		X	X		X									
101	S-25	"53"	277+29L	30	30	R1010		R1-1	R		X		101	X										X	X											2	116		X		X	X		X									
101	S-27	"53"	289+79R	30	30	R1010		R1-1	R		X		101					X								X		X	X											X				X								MOUNT TO NEW SIGNAL PUSH BUTTON POLE
101	S-27	"53"	290+54L	30	30	R1010		R1-1	R		X		101					X								X		X	X											X				X								MOUNT TO NEW SIGNAL PUSH BUTTON POLE
101	S-29	"53"	300+92R	30	30	R1010		R1-1	R		X		101												X															X			X									MOUNT TO EXISTING PIPE POST
101	S-30	"53"	305+78L	30	30	R1010		R1-1	R		X		101	X										X	X											2	116	X			X		X	X									
101	S-30	"53"	309+47L	30	30	R1010		R1-1	R		X		101												X															X			X									MOUNT TO EXISTING PIPE POST
101	S-32	"53"	318+02R	30	30	R1010		R1-1	R		X		101												X															X			X									MOUNT TO EXISTING PIPE POST
101	S-33	"53"	324+28L	30	30	R1010		R1-1	R		X		101												X															X			X									MOUNT TO EXISTING PIPE POST
101	S-33	"53"	324+47R	30	30	R1010		R1-1	R		X		101												X															X			X									MOUNT TO EXISTING PIPE POST
101	S-34	"53"	334+71L	30	30	R1010		R1-1	R		X		101												X															X			X									MOUNT TO EXISTING PIPE POST
101	S-35	"53"	339+61R	30	30	R1010		R1-1	R		X		101	X											X											2	116		X		X	X		X									
101	S-35	"53"	340+21L	30	30	R1010		R1-1	R		X		101	X											X											2	116		X		X	X		X									

1/ IF SIGN LOCATION ARE IN CONFLICT WITH OR BLOCKED BY EXISTING STREET FEATURES CONTACT THE ENGINEER PRIOR TO INSTALLATION

2/ NOTE: L,C,R ARE LOCATIONS OF POSTS FACING THE SIGN.
L = LEFT POST
C = CENTER POST
R = RIGHT POST
SINGLE POSTS ARE CENTER FACING THE SIGN UNLESS OTHERWISE NOTED.

3/ MINIMUM DEPTH OF FOOTING FOR TRIANGULAR BASE BREAKAWAY INSTALLATION IS FOR 2' DIAMETER FOOTING. FOR ADDITIONAL INFORMATION SEE ODOT STANDARD DRAWING TM602.

NO.	DATE	DESCRIPTION	APPD.
		REVISION	

DESIGNED BY A. Sullivan | DATE APPROVED Apr. 2013
CAD BY D. Ramer, C. Shearer | PROJECT NO. T00121
CHECKED BY J. Tower | 1/4 SECTION 2836,2936,3036, 3136,3236,3336, 3436,3536,3636
PROJECT NUMBER STP-5900(246)

REGISTERED PROFESSIONAL ENGINEER 16399PE OREGON JULY 10, 1993 LEWIS H. WARDRIP
Expires 6/30/14

APPROVALS:
SUPERVISING ENGINEER — REG. PROF. ENGR. NO. 16399PE
CITY ENGINEER — REG. PROF. ENGR. NO. 51538PE

CITY OF PORTLAND BUREAU OF TRANSPORTATION
CHARLIE HALES, MAYOR
STEVE TOWNSEN, P.E., CITY ENGINEER

CITY OF PORTLAND, OREGON 1851

NE/SE 50s Bikeway: NE Thompson to SE Woodstock
MULTNOMAH COUNTY
Sign and Post Data Table
SHEET NO. S-46

Plot Date: 4/2/2013 7:00:29 AM Filename: S:_II_Design\T00121 - 50's Bikeway Woodstock Blvd-Thompson St, SE-NE\CAD\PLAN_SHEETS\SHT S-46 SIGN AND POST DATA TABLE\PLOT_SHT_S-46.dgn

Bid Documents

SIGN AND POST DATA TABLE

SIGN NO.	SHEET NO.	LINE	SIGN LOCATION 1/ (STA. & DIR.)	SIGN DIMENSION: WIDTH (IN INCHES)	SIGN DIMENSION: HEIGHT (IN INCHES)	SIGN CODE: PBOT	SIGN CODE: ODOT	SIGN CODE: MUTCD	SIGN TYPE (PER SECS. 940 & 2910 COP STD. SPECS.)	SUB-STRATE: ALUM. COMPOSITE	SUB-STRATE: SHEET ALUM.	SUB-STRATE: EXTRUDED ALUM.	SIGN NO. 2/	TYPE OF SUPPORT – MOUNT: SINGLE PIPE POST	MOUNT: TWO PIPE POSTS	MOUNT: UTILITY POLE	MOUNT: LIGHT POLE	MOUNT: SIGNAL POLE	MOUNT: MAILBOX SUPPORT	MOUNT: TRIANGULAR BASE BREAKAWAY	MOUNT: SIGN BRIDGE	MOUNT: CANTILEVER	HARDWARE: U BOLT SIGN BRACKETS	HARDWARE: DOME POST CAP	HARDWARE: EXTRUDED TRAFFIC SIGN BRACKETS	HARDWARE: FLARED LEG BRACKETS	HARDWARE: STRAIGHT LEG BRACKETS	HARDWARE: BANDING AND BANDING CLIPS	HARDWARE: STRONG-BACK CHANNELS	HARDWARE: SINGLE SNS POST CAP (6")	HARDWARE: DOUBLE SNS CROSS PIECE (6")	HARDWARE: SINGLE SNS POST CAP (12")	HARDWARE: DOUBLE SNS CROSS PIECE (12")	HARDWARE: SNS CANTILEVER BRACKET	HARDWARE: SNS CANTILEVER EXTENSION	POST: SIZE IN INCHES (BASED ON ESTIMATED LENGTH)	POST: LENGTH IN INCHES (MUST BE FIELD VERIFIED)	FOOTING: TYPE: BREAKAWAY DOME ASSEMBLY	FOOTING: TYPE: BREAKAWAY ANCHOR ASSEMBLY	FOOTING: MIN. DEPTH 3/	REFER TO PBOT STD. DWG.: P-400	P-405	P-406	P-410	P-411	P-412	P-413	P-420	REFER TO ODOT STD. DWG.: TM602	TM675	TM680	REMARKS
101	S-39	"53"	257+63R	30	30	R1010		R1-1	R		X		101	X										X	X											2	116		X		X	X		X								
101	S-39	"53"	258+27L	30	30	R1010		R1-1	R		X		101	X										X	X											2	116		X		X	X		X								
101	S-4	"52"	79+29L	30	30	R1010		R1-1	R		X		101												X																X			X								MOUNT TO EXISTING PIPE POST
101	S-41	"54"	758+63R	30	30	R1010		R1-1	R		X		101	X										X	X											2	116		X		X	X		X								
101	S-41	"54"	759+26L	30	30	R1010		R1-1	R		X		101	X										X	X											2	116		X		X	X		X								
101	S-6	"52"	91+5L	30	30	R1010		R1-1	R		X		101												X																X			X								MOUNT TO EXISTING PIPE POST
101	S-8	"52"	102+40R	30	30	R1010		R1-1	R		X		101												X																X			X								MOUNT TO EXISTING PIPE POST
101	S-9	"52"	112+29R	30	30	R1010		R1-1	R		X		101												X																X			X								MOUNT TO EXISTING PIPE POST
102	S-17	"52"	159+81R	30	36	R2015		R2-1	W1		X		102	X										X	X											2	122		X		X	X		X								
102	S-18	"52"	168+38L	30	36	R2015		R2-1	W1		X		102	X										X	X											2	122		X		X	X		X								
102	S-19	"52"	170+14R	30	36	R2015		R2-1	W1		X		102	X										X	X											2	122		X		X	X		X								
102	S-21	"52"	182+42R	30	36	R2015		R2-1	W1		X		102	X										X	X											2	122		X		X	X		X								
102	S-21	"52"	182+95L	30	36	R2015		R2-1	W1		X		102	X										X	X											2	122		X		X	X		X								
102	S-23	"52"	195+47L	30	36	R2015		R2-1	W1		X		102	X										X	X											2	122		X		X	X		X								
102	S-23	"53"	263+50R	30	36	R2015		R2-1	W1		X		102	X										X	X											2	122		X		X	X		X								
102	S-23	"53"	266+21L	30	36	R2015		R2-1	W1		X		102	X										X	X											2	122		X		X	X		X								
102	S-23	"53"	267+81R	30	36	R2015		R2-1	W1		X		102	X										X	X											2	122		X		X	X		X								
102	S-25	"53"	276+27L	30	36	R2015		R2-1	W1		X		102	X										X	X											2	122		X		X	X		X								
102	S-25	"53"	277+69R	30	36	R2015		R2-1	W1		X		102	X										X	X											2	122		X		X	X		X								
102	S-28	"53"	293+73R	30	36	R2015		R2-1	W1		X		102	X										X	X											2	122		X		X	X		X								
102	S-29	"53"	302+08L	30	36	R2015		R2-1	W1		X		102	X										X	X											2	122		X		X	X		X								
102	S-30	"53"	306+36R	30	36	R2015		R2-1	W1		X		102	X										X	X											2	122	X			X		X	X								
102	S-33	"53"	328+34L	30	36	R2015		R2-1	W1		X		102	X										X	X											2	122		X		X	X		X								
102	S-34	"53"	330+31R	30	36	R2015		R2-1	W1		X		102	X										X	X											2	122		X		X	X		X								
103	S-29	"53"	304+50R	30	36	R2035		R2-1	W1		X		103												X																X			X								MOUNT TO EXISTING PIPIE POST
103	S-30	"53"	305+62L	30	36	R2035		R2-1	W1		X		103	X										X	X											2	122	X			X		X	X								
104	S-17	"52"	159+56C	30	30	R5100		R5-1	R		X		104	X										X	X											2	146	X			X		X	X								
104	S-17	"52"	159+56R	30	30	R5100		R5-1	R		X		104	X										X	X											2	146		X		X	X		X								
104	S-27	"53"	289+83L	30	30	R5100		R5-1	R		X		104	X										X	X											2	146	X			X		X	X								
104	S-27	"53"	290+56R	30	30	R5100		R5-1	R		X		104	X										X	X											2	134	X			X		X	X								
105	S-16	"52"	157+01R	30	18	R3970		W1			X		105	X										X	X											2	134		X		X	X		X								
105	S-17	"52"	159+56C	30	18	R3970		W1			X		105												X																X			X								SAME MOUNT AS SIGN 104
105	S-17	"52"	159+56R	30	18	R3970		W1			X		105												X																X			X								SAME MOUNT AS SIGN 104
106	S-27	"53"	289+83L	30	8	R3940		W1			X		106												X																X			X								SAME MOUNT AS SIGN 104
106	S-27	"53"	290+56R	30	8	R3940		W1			X		106												X																X			X								SAME MOUNT AS SIGN 104
107	S-16	"52"	156+39R	36	30	R3990		R4-4	W1		X		107	X										X	X											2	116		X		X	X		X								
108	S-16	"52"	157+01R	30	30	R3800			W1		X		108												X																X			X								SAME MOUNT AS SIGN 105

1/ IF SIGN LOCATION ARE IN CONFLICT WITH OR BLOCKED BY EXISTING STREET FEATURES CONTACT THE ENGINEER PRIOR TO INSTALLATION

2/ NOTE: L,C,R ARE LOCATIONS OF POSTS FACING THE SIGN.
L = LEFT POST
C = CENTER POST
R = RIGHT POST
SINGLE POSTS ARE CENTER FACING THE SIGN UNLESS OTHERWISE NOTED.

3/ MINIMUM DEPTH OF FOOTING FOR TRIANGULAR BASE BREAKAWAY INSTALLATION IS FOR 2' DIAMETER FOOTING. FOR ADDITIONAL INFORMATION SEE ODOT STANDARD DRAWING TM602.

NO.	DATE	DESCRIPTION	APPD.
		REVISION	

DESIGNED BY A. Sullivan | DATE APPROVED Apr. 2013
CAD BY D. Ramer, C. Shearer | PROJECT NO. T00121
CHECKED BY J. Tower | 1/4 SECTION 2836,2936,3036, 3136,3236,3336, 3436,3536,3636
PROJECT NUMBER STP-5900(246)

REGISTERED PROFESSIONAL ENGINEER 16399PE OREGON JULY 10, 1993 LEWIS H. WARDRIP
Expires 6/30/14

APPROVALS:
SUPERVISING ENGINEER — REG. PROF. ENGR. NO. 16399PE
CITY ENGINEER — REG. PROF. ENGR. NO. 51538PE

CITY OF PORTLAND BUREAU OF TRANSPORTATION
CHARLIE HALES, MAYOR
STEVE TOWNSEN, P.E., CITY ENGINEER

NE/SE 50s Bikeway: NE Thompson to SE Woodstock
MULTNOMAH COUNTY
Sign and Post Data Table Continued
SHEET NO. S-47

Plot Date: 4/2/2013 7:04:22 AM Filename: S:_II_Design\T00121 - 50's Bikeway Woodstock Blvd-Thompson St, SE-NE\CAD\PLAN_SHEETS\SHT S-47 SIGN AND POST DATA TABLE\PLOT_SHT_S-47.dgn

Bid Documents

SIGN AND POST DATA TABLE

SIGN NO.	SHEET NO.	LINE	SIGN LOCATION 1/ (STA. & DIR.)	SIGN DIMENSION: WIDTH (IN INCHES)	SIGN DIMENSION: HEIGHT (IN INCHES)	SIGN CODE: PBOT	SIGN CODE: ODOT	SIGN CODE: MUTCD	SIGN TYPE (PER SECS. 940 & 2910 COP STD. SPECS.)	SUB-STRATE: ALUM. COMPOSITE	SUB-STRATE: SHEET ALUM.	SUB-STRATE: EXTRUDED ALUM.	SIGN NO. 2/	TYPE OF SUPPORT – MOUNT: SINGLE PIPE POST	MOUNT: TWO PIPE POSTS	MOUNT: UTILITY POLE	MOUNT: LIGHT POLE	MOUNT: SIGNAL POLE	MOUNT: MAILBOX SUPPORT	MOUNT: TRIANGULAR BASE BREAKAWAY	MOUNT: SIGN BRIDGE	MOUNT: CANTILEVER	HARDWARE: U BOLT SIGN BRACKETS	HARDWARE: DOME POST CAP	HARDWARE: EXTRUDED TRAFFIC SIGN BRACKETS	HARDWARE: FLARED LEG BRACKETS	HARDWARE: STRAIGHT LEG BRACKETS	HARDWARE: BANDING AND BANDING CLIPS	HARDWARE: STRONG-BACK CHANNELS	HARDWARE: SINGLE SNS POST CAP (6")	HARDWARE: DOUBLE SNS CROSS PIECE (6")	HARDWARE: SINGLE SNS POST CAP (12")	HARDWARE: DOUBLE SNS CROSS PIECE (12")	HARDWARE: SNS CANTILEVER BRACKET	HARDWARE: SNS CANTILEVER EXTENSION	POST SIZE: IN INCHES (BASED ON ESTIMATED LENGTH)	POST LENGTH: IN INCHES (MUST BE FIELD VERIFIED)	FOOTING TYPE: BREAKAWAY DOME ASSEMBLY	FOOTING TYPE: BREAKAWAY ANCHOR ASSEMBLY	FOOTING: MIN. DEPTH 3/	REFER TO PBOT STD. DWG.: P-400	P-405	P-406	P-410	P-411	P-412	P-413	P-420	REFER TO ODOT STD. DWG.: TM602	TM675	TM680	REMARKS
109	S-17	"52"	158+92L	24	30	R4420			W1		X		109					X								X		X	X											X				X								MOUNT TO EXISTING SIGNAL POLE
109	S-17	"52"	159+81C	18	24	R5438		R10-6	W1		X		109	X										X	X												2	110	X			X		X	X								
109	S-25	"S"	13+08C	18	24	R5438			W1		X		109	X										X	X												2	86	X			X		X	X								
109	S-25	"S"	14+32C	18	24	R5438			W1		X		109	X										X	X												2	86	X			X		X	X								
111	S-17	"52"	159+72L	30	36	R4022		R10-6	W1		X		111	X										X	X												2	122	X			X		X	X								
111	S-29	"53"	302+81R	30	36	R4022		R10-6	W1		X		111	X										X	X												2	122		X		X	X		X								
112	S-17	"52"	159+59L	30	30	R4600R			YW		X		112	X										X	X												2	116	X			X		X	X								
112	S-29	"53"	302+95R	30	30	R4600R			YW		X		112	X										X	X												2	116		X		X	X		X								
113	S-15	"52"	144+71R	36	36	R4023			W11		X		113	X										X	X												2	122	X			X		X	X								
113	S-15	"52"	145+92L	36	36	R4023			W11		X		113	X										X	X												2	122	X			X		X	X								
114	S-18	"L"	5+79R	36	36	W3262			Y1		X		114	X										X	X												2	173		X		X	X		X								
114	S-18	"L"	7+32L	36	36	W3262			Y1		X		114	X										X	X												2	173		X		X	X		X								
114	S-21	"H"	9+05R	36	36	W3262			Y1		X		114	X										X	X												2	158		X		X	X		X								
114	S-21	"H"	9+17L	36	36	W3262			Y1		X		114	X										X	X												2	158		X		X	X		X								
114	S-23	"BE"	11+65R	36	36	W3262			Y1		X		114	X										X	X												2	149		X		X	X		X								
114	S-23	"BE"	12+23L	24	12	S1105		W16-7P	Y1		X		114												X																X			X								SAME MOUNT AS SIGN 116
114	S-25	"S"	13+38R	36	36	W3262			Y1		X		114	X										X	X												2	173		X		X	X		X								
114	S-25	"S"	14+03L	36	36	W3262			Y1		X		114	X										X	X												2	173		X		X	X		X								
114	S-40	"L"	8+56L	36	36	W3262			Y1		X		114	X											X												2	149		X		X	X		X								
116	S-18	"L"	5+79R	24	12	S1105		W16-7P	Y1		X		116												X																X			X								SAME MOUNT AS SIGN 114
116	S-18	"L"	7+32L	24	12	S1105		W16-7P	Y1		X		116												X																X			X								SAME MOUNT AS SIGN 114
116	S-21	"H"	9+05R	24	12	S1105		W16-7P	Y1		X		116												X																X			X								SAME MOUNT AS SIGN 114
116	S-21	"H"	9+17L	24	12	S1105		W16-7P	Y1		X		116												X																X			X								SAME MOUNT AS SIGN 114
116	S-23	"BE"	11+65R	24	12	S1105		W16-7P	Y1		X		116												X																X			X								SAME MOUNT AS SIGN 114
116	S-23	"BE"	12+23L	36	36	W3262			Y1		X		116	X										X	X												2	149	X			X		X	X								
116	S-25	"S"	13+38R	24	12	S1105		W16-7P	Y1		X		116												X																X			X								SAME MOUNT AS SIGN 114
116	S-25	"S"	14+03L	24	12	S1105		W16-7P	Y1		X		116												X																X			X								SAME MOUNT AS SIGN 114
117	S-37	"51"	551+78R	24	12	S1108			Y1		X		117												X																X			X								SAME MOUNT AS SIGN 125
117	S-38	"51"	560+38L	24	12	S1108			Y1		X		117												X																X			X								SAME MOUNT AS SIGN 125
117	S-39	"53"	253+74R	24	12	S1108			Y1		X		117												X																X			X								SAME MOUNT AS SIGN 125
117	S-40	"53"	262+20L	24	12	S1108			Y1		X		117												X																X			X								SAME MOUNT AS SIGN 125
117	S-40	"L"	8+56L	24	12	S1108		W16-9P	Y1		X		117												X																X			X								SAME MOUNT AS SIGN 114
117	S-41	"54"	754+72R	24	12	S1108			Y1		X		117												X																X			X								SAME MOUNT AS SIGN 125
117	S-42	"54"	763+15L	24	12	S1108			Y1		X		117												X																X			X								SAME MOUNT AS SIGN 125
118	S-25	"S"	13+08C	12	48	W2340			Y1		X		118												X																X			X								SAME MOUNT AS SIGN 109
118	S-25	"S"	14+32C	12	48	W2340			Y1		X		118												X																X			X								SAME MOUNT AS SIGN 109
119	S-30	"53"	305+40R	30	30	S3701	OBW1-9		Y1		X		119	X										X	X												2	128		X		X	X		X								

1/ IF SIGN LOCATION ARE IN CONFLICT WITH OR BLOCKED BY EXISTING STREET FEATURES CONTACT THE ENGINEER PRIOR TO INSTALLATION

2/ NOTE: L,C,R ARE LOCATIONS OF POSTS FACING THE SIGN.
L = LEFT POST
C = CENTER POST
R = RIGHT POST
SINGLE POSTS ARE CENTER FACING THE SIGN UNLESS OTHERWISE NOTED.

3/ MINIMUM DEPTH OF FOOTING FOR TRIANGULAR BASE BREAKAWAY INSTALLATION IS FOR 2' DIAMETER FOOTING. FOR ADDITIONAL INFORMATION SEE ODOT STANDARD DRAWING TM602.

NO.	DATE	DESCRIPTION	APPD.
		REVISION	

DESIGNED BY A. Sullivan | DATE APPROVED Apr. 2013
CAD BY D. Ramer, C. Shearer | PROJECT NO. T00121
CHECKED BY J. Tower | 1/4 SECTION 2836,2936,3036, 3136,3236,3336, 3436,3536,3636
PROJECT NUMBER STP-5900(246)

REGISTERED PROFESSIONAL ENGINEER 16399PE OREGON JULY 10, 1993 LEWIS H. WARDRIP
Expires 6/30/14

APPROVALS:
SUPERVISING ENGINEER — REG. PROF. ENGR. NO. 16399PE
CITY ENGINEER — REG. PROF. ENGR. NO. 51538PE

CITY OF PORTLAND BUREAU OF TRANSPORTATION
CHARLIE HALES, MAYOR
STEVE TOWNSEN, P.E., CITY ENGINEER

NE/SE 50s Bikeway: NE Thompson to SE Woodstock
MULTNOMAH COUNTY
Sign and Post Data Table Continued
SHEET NO. S-48

Plot Date: 4/2/2013 7:05:28 AM Filename: S:_IL_Design\T00121- 50's Bikeway Woodstock Blvd-Thompson St, SE-NE\CAD\PLAN-SHEETS\SHT S-48 SIGN AND POST DATA TABLE\PLOT_SHT_S-48.dgn

Bid Documents

SIGN AND POST DATA TABLE

SIGN NO.	SHEET NO.	LINE	SIGN LOCATION 1/ (STA. & DIR.)	SIGN DIMENSION: WIDTH (IN INCHES)	SIGN DIMENSION: HEIGHT (IN INCHES)	SIGN CODE: PBOT	SIGN CODE: ODOT	SIGN CODE: MUTCD	SIGN TYPE (PER SECS. 940 & 2910 COP STD. SPECS.)	SUB-STRATE: ALUM. COMPOSITE	SUB-STRATE: SHEET ALUM.	SUB-STRATE: EXTRUDED ALUM.	SIGN NO. 2/	TYPE OF SUPPORT – MOUNT: SINGLE PIPE POST	MOUNT: TWO PIPE POSTS	MOUNT: UTILITY POLE	MOUNT: LIGHT POLE	MOUNT: SIGNAL POLE	MOUNT: MAILBOX SUPPORT	MOUNT: TRIANGULAR BASE BREAKAWAY	MOUNT: SIGN BRIDGE	MOUNT: CANTILEVER	HARDWARE: U BOLT SIGN BRACKETS	HARDWARE: DOME POST CAP	HARDWARE: EXTRUDED TRAFFIC SIGN BRACKETS	HARDWARE: FLARED LEG BRACKETS	HARDWARE: STRAIGHT LEG BRACKETS	HARDWARE: BANDING AND BANDING CLIPS	HARDWARE: STRONG-BACK CHANNELS	HARDWARE: SINGLE SNS POST CAP (6")	HARDWARE: DOUBLE SNS CROSS PIECE (6")	HARDWARE: SINGLE SNS POST CAP (12")	HARDWARE: DOUBLE SNS CROSS PIECE (12")	HARDWARE: SNS CANTILEVER BRACKET	HARDWARE: SNS CANTILEVER EXTENSION	POST SIZE: IN INCHES (BASED ON ESTIMATED LENGTH)	POST LENGTH: IN INCHES (MUST BE FIELD VERIFIED)	FOOTING TYPE: BREAKAWAY DOME ASSEMBLY	FOOTING TYPE: BREAKAWAY ANCHOR ASSEMBLY	FOOTING: MIN. DEPTH 3/	REFER TO PBOT STD. DWG.: P-400	P-405	P-406	P-410	P-411	P-412	P-413	P-420	REFER TO ODOT STD. DWG.: TM602	TM675	TM680		REMARKS
125	S-37	"51"	551+78R	30	30	W2610			Y1		X		125	X										X	X											2	158		X		X	X		X								
125	S-38	"51"	560+38L	30	30	W2610			Y1		X		125	X										X	X											2	158		X		X	X		X								
125	S-39	"53"	253+74R	30	30	W2610			Y1		X		125	X										X	X											2	158		X		X	X		X								
125	S-40	"53"	262+20L	30	30	W2610			Y1		X		125	X										X	X											2	158		X		X	X		X								
125	S-41	"54"	754+72R	30	30	W2610			Y1		X		125	X										X	X											2	158		X		X	X		X								
125	S-42	"54"	763+15L	30	30	W2610			Y1		X		125	X										X	X											2	158	X			X		X	X								
126	S-17	"52"	159+43L	30	30	R4611			YW		X		126					X								X		X	X											X			X								MOUNT TO EXISTING SIGNAL POLE
141	S-13	"52"	133+67L	12	18	P1000L			W12	X			141	X									X	X											2	104		X		X	X		X								
141	S-2	"52"	67+17L	12	18	P1000L			W12	X			141	X									X	X											2	104		X		X	X		X								
141	S-21	"52"	184+42L	12	18	P1000L			W12	X			141	X									X	X											2	104		X		X	X		X								
141	S-25	"53"	276+21R	12	18	P1000L			W12	X			141	X									X	X											2	104		X		X	X		X								
141	S-25	"S"	12+51R	12	18	P1000L			W12	X			141	X									X	X											2	104	X			X		X	X								
141	S-25	"S"	14+87L	12	18	P1000L			W12	X			141	X									X	X											2	104		X		X	X		X								
141	S-29	"53"	302+31R	12	18	P1000L			W12	X			141	X									X	X											2	104		X		X	X		X								
142	S-11	"52"	120+35L	12	18	P1000R			W12	X			142	X									X	X											2	104		X		X	X		X								
142	S-17	"52"	159+43L	12	18	P1000R			W12	X			142	X									X	X											2	104		X		X	X		X								
142	S-21	"52"	182+42R	12	18	P1000R			W12	X			142										X																	X			X								SAME MOUNT AS SIGN 102
142	S-25	"53"	276+27L	12	18	P1000R			W12	X			142										X																	X			X								SAME MOUNT AS SIGN 102
142	S-25	"53"	277+69R	12	18	P1000R			W12	X			142										X																	X			X								SAME MOUNT AS SIGN 102
142	S-25	"S"	12+51L	12	18	P1000R			W12	X			142	X									X	X											2	104		X		X	X		X								
142	S-25	"S"	14+87R	12	18	P1000R			W12	X			142	X									X	X											2	104		X		X	X		X								
142	S-29	"53"	302+08L	12	18	P1000R			W12	X			142										X																	X			X								SAME MOUNT AS SIGN 102
142	S-36	"50"	452+44R	12	18	P1000R			W12	X			142	X									X	X											2	104	X			X		X	X								
142	S-8	"52"	101+95L	12	18	P1000R			W12	X			142	X									X	X											2	104		X		X	X		X								
143	S-16	"52"	156+33L	12	18	P1000D			W12	X			143	X									X	X											2	104		X		X	X		X								
143	S-17	"52"	157+41L	12	18	P1000D			W12	X			143	X									X	X											2	104		X		X	X		X								
143	S-17	"52"	159+81R	12	18	P1000R			W12	X			143										X																	X			X								SAME MOUNT AS SIGN 102
143	S-36	"50"	451+84R	12	18	P1000D			W12	X			143										X																	X			X								MOUNT TO EXISTING PIPE POST
146	S-30	"53"	305+62L	12	18	P1060			W12	X			146										X																	X			X								SAME MOUNT AS SIGN 103
147	S-33	"53"	328+34L	12	18	P3700R			W12	X			147										X																	X			X								SAME MOUNT AS SIGN 102
151	S-2	"52"	63+29R	24	30	S5001	OBD1-3C		G		X		151												X															X			X								MOUNT TO EXISTING PIPE POST
152	S-2	"52"	63+57L	24	36	S5001	OBD1-3C		G		X		152												X															X			X								MOUNT TO EXISTING PIPE POST
153	S-2	"52"	64+15R	24	36	S5001	OBD1-3C		G		X		153												X															X			X								MOUNT TO EXISTING PIPE POST
154	S-2	"52"	65+74L	24	36	S5001	OBD1-3C		G		X		154	X											X										2	122		X		X	X		X								
155	S-10	"52"	115+57R	24	36	S5001	OBD1-3C		G		X		155	X										X	X										2	122		X		X	X		X								
156	S-10	"52"	116+03L	24	36	S5001	OBD1-3C		G		X		156	X										X	X										2	122		X		X	X		X								
157	S-10	"52"	117+75R	24	30	S5001	OBD1-3C		G		X		157	X										X	X										2	116		X		X	X		X								

1/ IF SIGN LOCATION ARE IN CONFLICT WITH OR BLOCKED BY EXISTING STREET FEATURES CONTACT THE ENGINEER PRIOR TO INSTALLATION

2/ NOTE: L,C,R ARE LOCATIONS OF POSTS FACING THE SIGN.
L = LEFT POST
C = CENTER POST
R = RIGHT POST
SINGLE POSTS ARE CENTER FACING THE SIGN UNLESS OTHERWISE NOTED.

3/ MINIMUM DEPTH OF FOOTING FOR TRIANGULAR BASE BREAKAWAY INSTALLATION IS FOR 2' DIAMETER FOOTING. FOR ADDITIONAL INFORMATION SEE ODOT STANDARD DRAWING TM602.

NO.	DATE	DESCRIPTION	APPD.
		REVISION	

DESIGNED BY A. Sullivan | DATE APPROVED Apr. 2013
CAD BY D. Ramer, C. Shearer | PROJECT NO. T00121
CHECKED BY J. Tower | 1/4 SECTION 2836,2836,3036, 3136,3236,3336, 3436,3536,3636
PROJECT NUMBER STP-5900(246)

REGISTERED PROFESSIONAL ENGINEER 16399PE OREGON JULY 10, 1991 LEWIS H. WARDRIP
Expires 6/30/14

APPROVALS:
SUPERVISING ENGINEER — REG. PROF. ENGR. NO. 16399PE
CITY ENGINEER — REG. PROF. ENGR. NO. 51538PE

CITY OF PORTLAND BUREAU OF TRANSPORTATION
CHARLIE HALES, MAYOR
STEVE TOWNSEN, P.E., CITY ENGINEER

NE/SE 50s Bikeway: NE Thompson to SE Woodstock
MULTNOMAH COUNTY
Sign and Post Data Table Continued
SHEET NO. S-49

Plot Date: 4/2/2013 7:06:08 AM Filename: S:_ILDesign\T00121- 50's Bikeway Woodstock Blvd-Thompson St, SE-NE\CAD\PLAN_SHEETS\SHT S-49 SIGN AND POST DATA TABLE\PLOT_SHT_S-49.dgn

Bid Documents

SIGN AND POST DATA TABLE

SIGN NO.	SHEET NO.	LINE	SIGN LOCATION 1/ (STA. & DIR.)	SIGN DIMENSION: WIDTH (IN INCHES)	SIGN DIMENSION: HEIGHT (IN INCHES)	SIGN CODE: PBOT	SIGN CODE: ODOT	SIGN CODE: MUTCD	SIGN TYPE (PER SECS. 940 & 2910 COP STD. SPECS.)	SUB-STRATE: ALUM. COMPOSITE	SUB-STRATE: SHEET ALUM.	SUB-STRATE: EXTRUDED ALUM.	SIGN NO. 2/	TYPE OF SUPPORT – MOUNT: SINGLE PIPE POST	MOUNT: TWO PIPE POSTS	MOUNT: UTILITY POLE	MOUNT: LIGHT POLE	MOUNT: SIGNAL POLE	MOUNT: MAILBOX SUPPORT	MOUNT: TRIANGULAR BASE BREAKAWAY	MOUNT: SIGN BRIDGE	MOUNT: CANTILEVER	HARDWARE: U BOLT SIGN BRACKETS	HARDWARE: DOME POST CAP	HARDWARE: EXTRUDED TRAFFIC SIGN BRACKETS	HARDWARE: FLARED LEG BRACKETS	HARDWARE: STRAIGHT LEG BRACKETS	HARDWARE: BANDING AND BANDING CLIPS	HARDWARE: STRONG-BACK CHANNELS	HARDWARE: SINGLE SNS POST CAP (6")	HARDWARE: DOUBLE SNS CROSS PIECE (6")	HARDWARE: SINGLE SNS POST CAP (12")	HARDWARE: DOUBLE SNS CROSS PIECE (12")	HARDWARE: SNS CANTILEVER BRACKET	HARDWARE: SNS CANTILEVER EXTENSION	POST: SIZE IN INCHES (BASED ON ESTIMATED LENGTH)	POST: LENGTH IN INCHES (MUST BE FIELD VERIFIED)	FOOTING: TYPE: BREAKAWAY DOME ASSEMBLY	FOOTING: TYPE: BREAKAWAY ANCHOR ASSEMBLY	FOOTING: MIN. DEPTH 3/	REFER TO PBOT STD. DWG.: P-400	P-405	P-406	P-410	P-411	P-412	P-413	P-420	REFER TO ODOT STD. DWG.: TM602	TM675	TM680		REMARKS
158	S-10	"52"	118+18L	24	36	S5001	OBD1-3C		G		X		158	X										X	X											2	122		X		X	X		X									
159	S-15	"52"	144+45R	24	36	S5001	OBD1-3C		G		X		159	X										X	X											2	122		X		X	X		X									
160	S-15	"W"	4+75L	24	30	S5001	OBD1-3C		G		X		160	X										X	X											2	116		X		X	X		X									
161	S-15	"W"	2+50R	24	36	S5001	OBD1-3C		G		X		161	X										X	X											2	122		X		X	X		X									
162	S-15	"52"	146+82L	24	36	S5001	OBD1-3C		G		X		162	X										X	X											2	122		X		X	X		X									
163	S-18	"52"	167+93R	24	30	S5001	OBD1-3C		G		X		163	X										X	X											2	116		X		X	X		X									
164	S-18	"L"	5+53R	24	30	S5001	OBD1-3C		G		X		164	X										X	X											2	116		X		X	X		X									
165	S-40	"L"	7+93L	24	30	S5001	OBD1-3C		G		X		165	X										X	X											2	116		X		X	X		X									
166	S-19	"52"	170+39L	24	30	S5001	OBD1-3C		G		X		166	X										X	X											2	116		X		X	X		X									
167	S-23	"52"	195+30R	24	30	S5001	OBD1-3C		G		X		167	X										X	X											2	116		X		X	X		X									
168	S-23	"52"	195+86L	24	30	S5001	OBD1-3C		G		X		168	X										X	X											2	116		X		X	X		X									
169	S-23	"53"	263+04R	24	30	S5001	OBD1-3C		G		X		169	X										X	X											2	116		X		X	X		X									
170	S-23	"53"	263+65L	24	30	S5001	OBD1-3C		G		X		170	X										X	X											2	116		X		X	X		X									
171	S-28	"53"	297+76R	24	30	S5001	OBD1-3C		G		X		171	X										X	X											2	116		X		X	X		X									
172	S-28	"53"	298+01L	24	30	S5001	OBD1-3C		G		X		172	X										X	X											2	116		X		X	X		X									
173	S-28	"53"	298+32R	24	30	S5001	OBD1-3C		G		X		173	X										X	X											2	116		X		X	X		X									
174	S-29	"53"	299+46L	24	30	S5001	OBD1-3C		G		X		174	X										X	X											2	116		X		X	X		X									
175	S-35	"53"	338+54R	24	30	S5001	OBD1-3C		G		X		175	X										X	X											2	116		X		X	X		X									
176	S-35	"53"	339+76L	24	30	S5001	OBD1-3C		G		X		176	X										X	X											2	116		X		X	X		X									
177	S-35	"53"	340+06R	24	30	S5001	OBD1-3C		G		X		177											X	X																X		X									MOUNT TO EXISTING PIPE POST
178	S-35	"53"	340+71L	24	30	S5001	OBD1-3C		G		X		178	X										X	X											2	116		X		X	X		X									
181	S-15	"W"	3+93L	VAR.	8	G5501			G		X		181																		X									X				X	X						SAME MOUNT AS SIGN 101
181	S-18	"52"	168+74R	VAR.	8	G5501			G		X		181																		X									X				X	X						SAME MOUNT AS SIGN 1
181	S-18	"52"	169+50L	VAR.	8	G5501			G		X		181																		X									X				X	X						SAME MOUNT AS SIGN 1
181	S-22	"52"	191+56R	VAR.	8	G5501			G		X		181																		X									X				X	X						SAME MOUNT AS SIGN 101
181	S-22	"52"	192+07L	VAR.	8	G5501			G		X		181																		X									X				X	X						SAME MOUNT AS SIGN 101
182	S-25	"53"	274+27L	VAR.	8	G5501			G		X		182																		X									X				X	X						SAME MOUNT AS SIGN 101
182	S-25	"53"	274+60R	VAR.	8	G5501			G		X		182																		X									X				X	X						SAME MOUNT AS SIGN 101
182	S-25	"53"	276+62R	VAR.	8	G5501			G		X		182																		X									X				X	X						SAME MOUNT AS SIGN 1
182	S-25	"53"	277+29L	VAR.	8	G5501			G		X		182																		X									X				X	X						SAME MOUNT AS SIGN 101
183	S-35	"53"	339+61R	VAR.	8	G5501			G		X		183																		X									X				X	X						SAME MOUNT AS SIGN 101
183	S-35	"53"	340+21L	VAR.	8	G5501			G		X		183																		X									X				X	X						SAME MOUNT AS SIGN 101
183	S-40	"L"	8+56L	VAR.	8	G5501			G		X		183																		X									X				X	X						SAME MOUNT AS SIGN 114
184	S-15	"W"	3+93L	VAR.	8	G5501		R1-1	G		X		184																	X									X				X	X						SAME MOUNT AS SIGN 101
185	S-18	"52"	168+74R	VAR.	8	G5501			G		X		185																	X									X				X	X						SAME MOUNT AS SIGN 1
185	S-18	"52"	169+50L	VAR.	8	G5501			G		X		185																	X									X				X	X						SAME MOUNT AS SIGN 1
185	S-40	"L"	8+56L	VAR.	8	G5501			G		X		185																	X									X				X	X						SAME MOUNT AS SIGN 114

1/ IF SIGN LOCATION ARE IN CONFLICT WITH OR BLOCKED BY EXISTING STREET FEATURES CONTACT THE ENGINEER PRIOR TO INSTALLATION

2/ NOTE: L,C,R ARE LOCATIONS OF POSTS FACING THE SIGN.
L = LEFT POST
C = CENTER POST
R = RIGHT POST
SINGLE POSTS ARE CENTER FACING THE SIGN UNLESS OTHERWISE NOTED.

3/ MINIMUM DEPTH OF FOOTING FOR TRIANGULAR BASE BREAKAWAY INSTALLATION IS FOR 2' DIAMETER FOOTING. FOR ADDITIONAL INFORMATION SEE ODOT STANDARD DRAWING TM602.

NO.	DATE	DESCRIPTION	APPD.

REVISION

DESIGNED BY A. Sullivan | DATE APPROVED Apr. 2013
CAD BY D. Ramer, C. Shearer | PROJECT NO. T00121
CHECKED BY J. Tower | 1/4 SECTION 2836,2936,3036, 3136,3236,3336, 3436,3536,3636
PROJECT NUMBER STP-5900(246)

REGISTERED PROFESSIONAL ENGINEER 16399PE OREGON JULY 10, 1993 LEWIS H. WARDRIP
Expires 6/30/14

APPROVALS:
SUPERVISING ENGINEER — REG. PROF. ENGR. NO. 16399PE
CITY ENGINEER — REG. PROF. ENGR. NO. 51538PE

CITY OF PORTLAND BUREAU OF TRANSPORTATION
CHARLIE HALES, MAYOR
STEVE TOWNSEN, P.E., CITY ENGINEER

NE/SE 50s Bikeway: NE Thompson to SE Woodstock
MULTNOMAH COUNTY
Sign and Post Data Table Continued
SHEET NO. S-50

Plot Date: 4/2/2013 7:06:46 AM Filename: S:_IL_Design\T00121 - 50's Bikeway Woodstock Blvd-Thompson St, SE-NE\CAD\PLAN_SHEETS\SHT S-50 SIGN AND POST DATA TABLE\PLOT_SHT_S-50.dgn

SIGN AND POST DATA TABLE

SIGN NO.	SHEET NO.	LINE	SIGN LOCATION 1/ (STA. & DIR.)	SIGN DIMENSION: WIDTH (IN INCHES)	SIGN DIMENSION: HEIGHT (IN INCHES)	SIGN CODE: PBOT	SIGN CODE: ODOT	SIGN CODE: MUTCD	SIGN TYPE (PER SECS. 940 & 2910 COP STD. SPECS.)	SUB-STRATE: ALUM. COMPOSITE	SUB-STRATE: SHEET ALUM.	SUB-STRATE: EXTRUDED ALUM.	SIGN NO. 2/	TYPE OF SUPPORT – MOUNT: SINGLE PIPE POST	MOUNT: TWO PIPE POSTS	MOUNT: UTILITY POLE	MOUNT: LIGHT POLE	MOUNT: SIGNAL POLE	MOUNT: MAILBOX SUPPORT	MOUNT: TRIANGULAR BASE BREAKAWAY	MOUNT: SIGN BRIDGE	MOUNT: CANTILEVER	HARDWARE: U BOLT SIGN BRACKETS	HARDWARE: DOME POST CAP	HARDWARE: EXTRUDED TRAFFIC SIGN BRACKETS	HARDWARE: FLARED LEG BRACKETS	HARDWARE: STRAIGHT LEG BRACKETS	HARDWARE: BANDING AND BANDING CLIPS	HARDWARE: STRONG-BACK CHANNELS	HARDWARE: SINGLE SNS POST CAP (6")	HARDWARE: DOUBLE SNS CROSS PIECE (6")	HARDWARE: SINGLE SNS POST CAP (12")	HARDWARE: DOUBLE SNS CROSS PIECE (12")	HARDWARE: SNS CANTILEVER BRACKET	HARDWARE: SNS CANTILEVER EXTENSION	POST: SIZE IN INCHES (BASED ON ESTIMATED LENGTH)	POST: LENGTH IN INCHES (MUST BE FIELD VERIFIED)	FOOTING: TYPE: BREAKAWAY DOME ASSEMBLY	FOOTING: TYPE: BREAKAWAY ANCHOR ASSEMBLY	FOOTING: MIN. DEPTH 3/	REFER TO PBOT STD. DWG.: P-400	P-405	P-406	P-410	P-411	P-412	P-413	P-420	REFER TO ODOT STD. DWG.: TM602	TM675	TM680		REMARKS
187	S-22	"52"	191+56R	VAR.	8	G5501			G		X		187																X											X			X								SAME MOUNT AS SIGN 101
187	S-22	"52"	192+07L	VAR.	8	G5501			G		X		187																X											X			X								SAME MOUNT AS SIGN 101
189	S-25	"53"	274+27L	VAR.	8	G5501			G		X		189																		X									X			X								SAME MOUNT AS SIGN 101
189	S-25	"53"	274+60R	VAR.	8	G5501			G		X		189																		X									X			X								SAME MOUNT AS SIGN 101
190	S-25	"53"	276+62R	VAR.	8	G5501			G		X		190																X											X			X								SAME MOUNT AS SIGN 1
190	S-25	"53"	277+29L	VAR.	8	G5501			G		X		190																X											X			X								SAME MOUNT AS SIGN 101
192	S-35	"53"	339+61R	VAR.	8	G5501			G		X		192																X											X			X								SAME MOUNT AS SIGN 101
192	S-35	"53"	340+21L	VAR.	8	G5501			G		X		192																X											X			X								SAME MOUNT AS SIGN 101

1/ IF SIGN LOCATION ARE IN CONFLICT WITH OR BLOCKED BY EXISTING STREET FEATURES CONTACT THE ENGINEER PRIOR TO INSTALLATION

2/ NOTE: L,C,R ARE LOCATIONS OF POSTS FACING THE SIGN.
L = LEFT POST
C = CENTER POST
R = RIGHT POST
SINGLE POSTS ARE CENTER FACING THE SIGN UNLESS OTHERWISE NOTED.

3/ MINIMUM DEPTH OF FOOTING FOR TRIANGULAR BASE BREAKAWAY INSTALLATION IS FOR 2' DIAMETER FOOTING. FOR ADDITIONAL INFORMATION SEE ODOT STANDARD DRAWING TM602.

NO.	DATE	DESCRIPTION	APPD.
		REVISION	

DESIGNED BY A. Sullivan | DATE APPROVED Apr. 2013
CAD BY D. Ramer, C. Shearer | PROJECT NO. T00121
CHECKED BY J. Tower | J/A SECTION 2836,2936,3036,3136,3236,3336,3436,3536,3636
PROJECT NUMBER STP-5900(246)

REGISTERED PROFESSIONAL ENGINEER 16399PE OREGON JULY 10, 1993 LEWIS H. WAROKIP
Expires 6/30/14

APPROVALS:
SUPERVISING ENGINEER — REG. PROF. ENGR. NO. 16399PE
CITY ENGINEER — REG. PROF. ENGR. NO. 51538PE

CITY OF PORTLAND BUREAU OF TRANSPORTATION
CHARLIE HALES, MAYOR
STEVE TOWNSEN, P.E., CITY ENGINEER

NE/SE 50s Bikeway: NE Thompson to SE Woodstock
MULTNOMAH COUNTY
Sign and Post Data Table Continued
SHEET NO. S-51

Plot Date: 4/2/2013 7:07:31AM Filename: S:_ILDesign\T00121 - 50's Bikeway Woodstock Blvd-Thompson St, SE-NE\CAD\PLAN_SHEETS\SHT S-51\SIGN AND POST DATA TABLE\PLOT_SHT_S-51.dgn

Bid Documents

TRAFFIC SIGNAL LEGEND CODE

NE/SE 50s Bikeway: NE Thompson to SE Woodstock.

- MAP — INSTALL MAST ARM POLE, SEE STD. DWG. P-601, P-606
- MA (L) — INSTALL (L) FOOT MAST ARM, SEE STD. DWG P-604
- CMS 28 — INSTALL MAST ARM POLE, SEE STD. DWG. P-602, P-606 OR P-607
- SSP (L) — INSTALL (L) FOOT STEEL STRAIN POLE
- LU (L) — INSTALL (L) LENGTH LUMINAIRE ARM, SEE STD. DWG. P-605
- LU (W) — INSTALL LED LUMINAIRE (W) WATTS
  50W - CREE MODEL # BXSPA021AUSQ OR APPROVED EQUAL
  100W- CREE MODEL # BXSPA022AUSQ OR APPROVED EQUAL
- FBP (L) — INSTALL (L) FOOT STEEL SIGNAL POLE WITH FRANGIBLE BASE, P-608
- APS (PH)A — INSTALL ACCESSIBLE PEDESTRIAN SYSTEM WITH ARROW, L-LEFT OR R-RIGHT FOR PHASE(PH)
- CP (PH) — INSTALL PHASE (PH) COUNTDOWN LED PEDESTRIAN SIGNAL
- BPB (PH) — INSTALL PHASE (PH/RRFB) BICYCLE PUSHBUTTON WITH 9" X 12" SIGN (PUSH BUTTON FOR BIKE CROSSING-MODIFIED R-10) ON CAMPBELL MPS 912 MOUNT OR APPROVED SIMILAR WITH POLARA BULLDOG TYPE PUSHBUTTON OR APPROVED SIMILAR
- SB (T) — INSTALL TYPE (T) SIDEWALK PULL BOX, STD DWG P-632
- TC (N) — INSTALL SIZE (N) OVERHEAD TERMINAL CABINET, SEE RAINTIGHT TERMINAL CABINET DWG BELOW
- 2070E 337 — INSTALL TYPE 2070E WITH VOYAGE CONTROLLER IN TYPE 337 CABINET
- US — INSTALL 120 VAC UNMETERED SERVICE CABINET & EQUIPMENT
- 764 (N) — INSTALL (N) OPTICOM MODEL 764 DISCRIMINATOR MODULES
- 242 (N) — INSTALL (N) NUMBER MODEL 242 DC ISOLATOR
- V45 (PH) — INSTALL PHASE (PH) VEHICLE "HYBRID" BEACON 12R-12R-12Y
- V46 (PH) — INSTALL PHASE (PH) BICYCLE SIGNAL 12BR-12BY-12BG
- VI (PH) — INSTALL PHASE (PH) VEHICLE SIGNAL 8R-8Y-8G
- V2 (PH) — INSTALL PHASE (PH) VEHICLE SIGNAL 12R-8Y-8G
- RS NTEB — INSTALL 24"X36" "DIAMOND GRADE" REFLECTIVE SIGN " NO TURN EXCEPT BICYCLES"
- RS DEEB — INSTALL 30"X38" "DIAMOND GRADE" REFLECTIVE SIGN "DO NOT ENTER EXCEPT BICYCLES"
- RS RTOEB — INSTALL 30"X44" "DIAMOND GRADE" REFLECTIVE SIGN "RIGHT TURN ONLY *SYMBOL* EXCEPT BUS"
- RS TOBO — INSTALL 30"X44" "DIAMOND GRADE" REFLECTIVE SIGN "THRU ONLY *SYMBOL* BICYCLES ONLY"
- RS LTO — INSTALL 30"X36" "DIAMOND GRADE" REFLECTIVE SIGN "LEFT TURN *SYMBOL* ONLY"
- RS CWSOR — INSTALL 24"X30" "DIAMOND GRADE" REFLECTIVE SIGN "CROSSWALK STOP ON RED" CITY CODE R4035V
- RS NTREB — INSTALL 24"X30" "DIAMOND GRADE" REFLECTIVE SIGN - "NO TURN ON RED EXCEPT BICYCLES" CITY CODE R4420V
- RS NLTEB — INSTALL 24"X32" "DIAMOND GRADE" REFLECTIVE SIGN "NO LEFT TURN *SYMBOL* EXCEPT BICYCLES"
- RS NRTEB — INSTALL 24"X32" "DIAMOND GRADE" REFLECTIVE SIGN - "NO RIGHT TURN *SYMBOL* "EXCEPT BICYCLES" CITY CODE R4420V
- RS CWPB — INSTALL 36 IN. X 36 IN. DIAMOND "DIAMOND GRADE" REFLECTIVE BICYCLE AND PEDESTRIAN CROSSING WARNING SIGN CITY CODE W3262

- 2SC — INSTALL 2 INCH DIAMETER CONDUIT STUB 6 INCH PAST CURB
- RRFB — INSTALL RECTANGULAR RAPID FLASH BEACON, RRFB
- APB — INSTALL AUDIBLE PEDETRIAN PUSH BUTTON, POLARA XAV2-LED AUDIBLE BUTTON OR APPROVED EQUAL IN POLE MOUNT CABINET OR APPROVAL EQUAL.
- APB CC — INSTALL CABINET WITH AUDIBLE PUSH BUTTON CONTROLLER
- PP (L) — INSTALL (L) FOOT PIPE POST ON PEDESTAL BASE
- SC318 RRFB — INSTALL RAPID FLASH BEACON CONTROLLER
- EB — INSTALL 5/8 EYE BOLT
- WH — INSTALL WEATHER HEAD
- SW — INSTALL 3/8 INCH SPAN WIRE
- STW — INSTALL 3/8 INCH SPAN WIRE AND 1/4 INCH TETHER WIRE
- US — INSTALL TYPE US UNMETERED ELECTRICAL SERVICE CABINET
- 3B (H) — INSTALL 3-BOLT CLAMP WITH SPECIFIED ATTACHMENT HEIGHT (H IN FEET)
- (N) - (X) — INSTALL (N) - (X) CONDUCTOR NO.14 AWG CABLE
- (N) - SP — INSTALL (N)-2/C NO.14 AWG SHIELDED,TWISTED PAIR CABLE
- (N)/(G) — INSTALL (N) NO.(G) AWG XHHW WIRES
- (N) - (X)PR — INSTALL (N) PAIRED INTERCONNECT CABLES WITH (X) SHIELDED, TWISTED NO.22 AWG PAIRS
- (S) — INSTALL (S) INCH DIAMETER SCHEDULE 80 PVC ELECTRICAL CONDUIT
- SNS (N) — INSTALL NUMBER (N) OVERHEAD STREET NAME SIGN SEE STD. DWG. P-629 AND STD. DWG. P-420
  STREET NAMES (N):
  1. E Burnside St.
  2. E 53rd Ave.
- BL PH — INSTALL 6 FT. X 3 FT. QUADRAPOLE BICYCLE DETECTION LOOP, PHASE(PH) SEE STD. DWG. P-634
- L (PH) — INSTALL 6 FT. 4 TURN ROUND LOOP FOR PHASE (PH) SEE P-634
- PBL PH — INSTALL SIZE AS PER PLAN PARALLELOGRAM BICYCLE DETECTION LOOP, PHASE(PH) SEE STD. DWG. P-634, USE PREFORMED LOOPS TYPE PLH OR PLB

(G) = GAUGE SHOWN
(L) = LENGTH SHOWN
(M) = MESSAGE
(N) = NUMBER SHOWN
(S) = SIZE SHOWN
(T) = TYPE SHOWN
(X) = NUMBER CONDUCTOR SHOWN
(CH) = CHANNEL SHOWN
(PH) = PHASE SHOWN

- UP — EXISTING UTILITY POLE
- STW — EXISTING SPAN AND TETHER WIRES
- WH — EXISTING WEATHERHEAD
- TC — EXISTING OVERHEAD TERMINAL CABINET
- WP — EXISTING WOOD POLE
- I70 — EXISTING I70 STYLE TRAFFIC SIGNAL CONTROLLER
- CDP (PH) — EXISTING PHASE (PH) MODULAR COUNTDOWN PEDESTRIAN SIGNAL
- SSP (L) — EXISTING (L) FOOT STEEL STRAIN POLE
- (N) - (X) — EXISTING (N)-(X) CONDUCTOR NO.14 AWG CABLE(S)
- P — REMOVE EXISTING PEDESTRIAN SIGNAL (S)
- SW — REMOVE EXISITING SPAN WIRE
- V — REMOVE EXISTING VEHICLE SIGNAL
- OD — REMOVE EXISTING OPTICOM DETECTOR
- WP — REMOVE EXISTING WOOD POLE
- C — REMOVE EXISTING CONTROLLER AND ASSOCIATED POLE HARDWARE
- ABN — ABANDON ITEM NOTED

NOTES

1 - BOND MESSENGER TO GROUNDING BUSHING OUTSIDE OF AND ON THE BOTTOM OF TERMINAL CABINET.
2- ON WOOD POLES FASTEN TERMINAL CABINET WITH 2-1/4" x 2" LAG SCREWS.
3- CONDUCTORS INTO A METAL POLE SHALL BE ROUTED OVER THE EYEBOLT ABOVE THE TERMINAL CABINET. EYEBOLT THREADS WITHIN THE POLE SHALL BE TAPED.
4- 8" MINIMUM LOOP REQUIRED WHERE CONDUCTORS JOIN MESSENGER CABLE.

T.E. SIZE	WIDTH x	HEIGHT y	DEPTH d	DIA. s
1	6	8	4	2
2	8	10	4	2 1/2
3	8	16	4	3
4	12	16	4	3
5	12	16	6	3 1/2

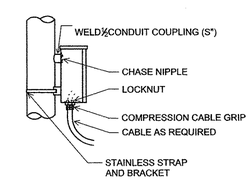

TYPICAL INSTALLATION ON STEEL POLE

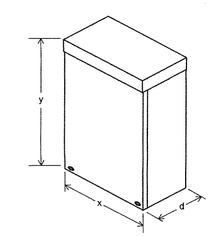

NOT TO SCALE

RAINTIGHT TERMINAL CABINET

NO.	DATE	DESCRIPTION	APPD.

REVISION

DESIGNED BY N. Adre M. Haines	DATE APPROVED Mar. 2013	INTER. NUMBER
CAD BY N. Adre M. Haines	DIV. ENGINEER P. Koonce	PROJECT NO. T00121
CHECKED BY N.A dre		1/4 SECTION 2836,2936,3036 3136,3236,3336 3436,3536,3636
PROJECT NUMBER STP-5900(246)		

REGISTERED PROFESSIONAL ENGINEER 44962PE OREGON JANUARY 08, 2008 NORBERTO A DRE
4/9/13
Expires 12/31/2013

APPROVALS:
PRINCIPAL ENGINEER — 4/9/13 — REG. PROF. ENGR. NO. 53882PE
CITY ENGINEER — REG. PROF. ENGR. NO. 51538PE

CITY OF PORTLAND BUREAU OF TRANSPORTATION
CHARLIE HALES, MAYOR
STEVE TOWNSEN, P.E., CITY ENGINEER

NE/SE 50s Bikeway: NE Thompson to SE Woodstock
MULTNOMAH COUNTY
TRAFFIC SIGNAL PLAN LEGEND
SHEET NO. TS-01

Plot Date: 4/8/2013 5:46:26 PM Filename: S:\PROJECTS\T00121 - 50's Bikeway Woodstock Blvd-Thompson St, SE-NE\CAD\PLAN_SHEETS\SHT TS-01TRAFFIC SIGNALS\TS-01Legend.dgn

Bid Documents

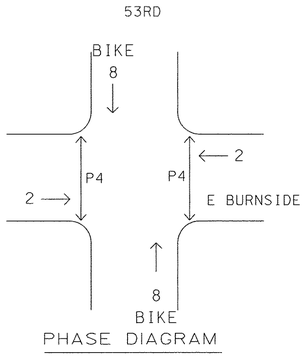

PHASE DIAGRAM

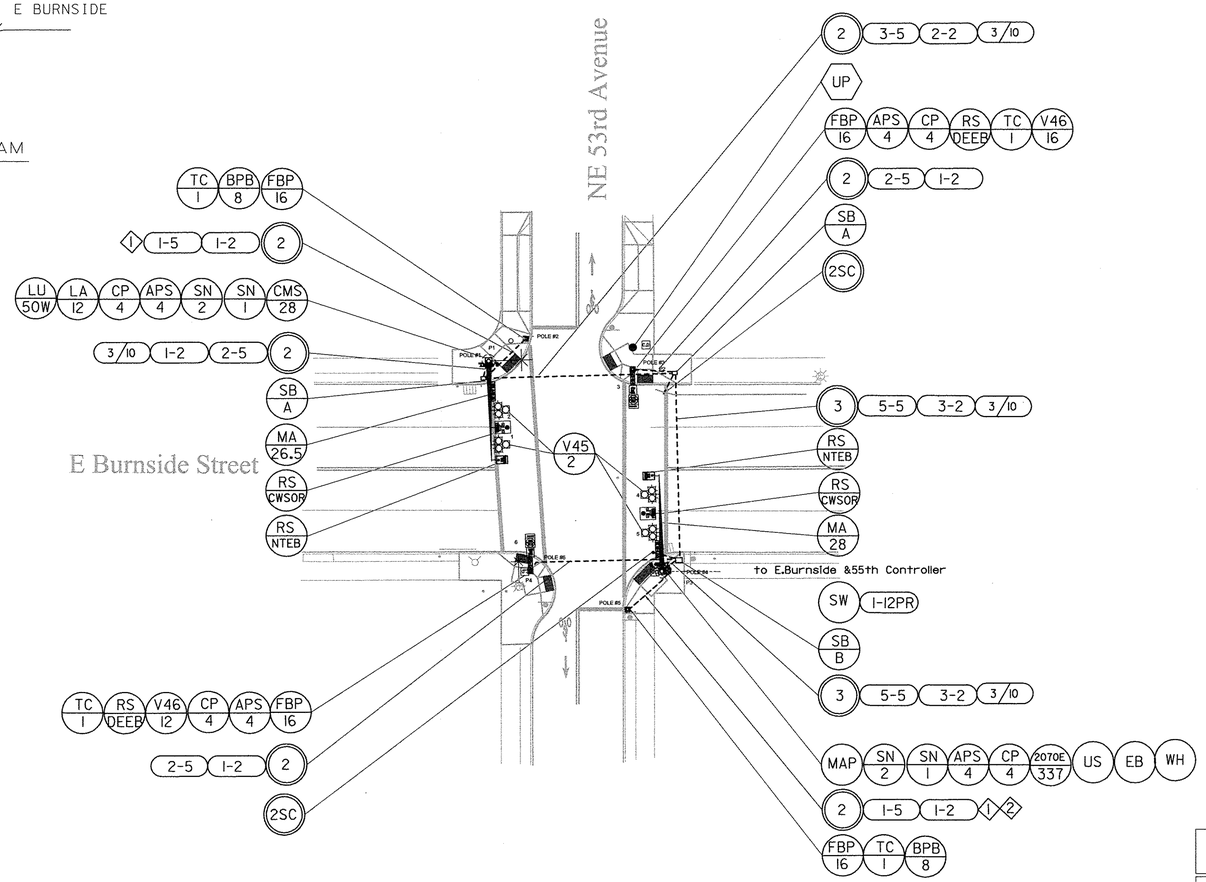

MAST ARM CLEARANCE CALCULATIONS

E. BURNSIDE St. & 53rd
POLE NO.1

SPAN (FT.)				26.50
RISER (FT.)				18.50
RADIUS (FT.)				80.00
ANGLE (DEGREES)				13.00
STRAIGHT SECTION (FT.)				3.70
CURVED SECTION (FT.)				14.00
ANGLED STRAIGHT SECTION (FT.)				9.23
ELEVATION DIFFERENCE BETWEEN BASE AND STREET (FT.)				0.00
ELEVATION DIFFERENCE BETWEEN BASE AND END OF ARM (FT.)				22.70
DEVICE NUMBER 1	30 x 36 SIGN			
DEVICE NUMBER 2	HYBRID BEACON			
DEVICE NUMBER 3	30 x 36 SIGN			
DEVICE NUMBER 4	HYBRID BEACON			
DISTANCE TO DEVICE (FT.) FROM END OF ARM	0.30	4.33	8.83	13.33
CLEARANCE UNDER DEVICE (FT.)	-	18.00	-	18.00

POLE NO.4

SPAN (FT.)				25.50
RISER (FT.)				19.00
RADIUS (FT.)				80.00
ANGLE (DEGREES)				13.00
STRAIGHT SECTION (FT.)				2.70
CURVED SECTION (FT.)				14.00
ANGLED STRAIGHT SECTION (FT.)				9.23
ELEVATION DIFFERENCE BETWEEN BASE AND STREET (FT.)				0.00
ELEVATION DIFFERENCE BETWEEN BASE AND END OF ARM (FT.)				23.15
DEVICE NUMBER 1	30 X 36 SIGN			
DEVICE NUMBER 2	HYBRID BEACON			
DEVICE NUMBER 3	30 X 36 SIGN			
DEVICE NUMBER 4	HYBRID BEACON			
DISTANCE TO DEVICE (FT.) FROM END OF ARM	0.30	5.33	10.33	15.33
CLEARANCE UNDER DEVICE (FT.)	-	18.00	-	18.00

POLE ENTRANCE CHART

E. Burnside St. & 53rd Ave.

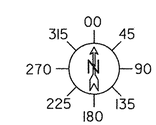

POLE NO.	POLE TYPE	MAST ARM	HAND HOLE	TERMINAL CAN	SERVICE. CABINET	SIGNAL	PEDESTRIAN SIGNAL	PUSH BUTTON	CONTROLLER	STREETLIGTH
1	CMS	180	270	0		-	90	90	-	90
2	FBP	-	0	0	-	-	-	90	-	-
3	FBP	-	0	0	-	180	90	90	-	-
4	MAP	0	180	0	180	-	270	270	90	-
5	FBP	-	180	180	-	-		270	-	-
6	FBP	-	180	180	-	0	270	270	-	-

CMS- Combination mast arm and streetlight pole
FBP- Fragible base pole
MAP- Mast arm pole

N

0 20 40 60 80
FEET

CONSTRUCTION NOTES:

1. Additonal 5 conductor cable is for future use.
2. 2" Conduit route to under the controller.

- TERMINATE BIKE SIGNALS TO PH 4 LOAD SWITCH
  RE-ASSIGN TO PH 4 LOAD SWICTH TO PH 8 (TIMING ENGINEER)

NO.	DATE	DESCRIPTION	APPD.

REVISION

DESIGNED BY N. Adre M. Haines	DATE APPROVED MAR 2013	INTER. NUMBER
CAD BY N. Adre M. Haines	DIV. ENGINEER P. Koonce	PROJECT NO. T00121
CHECKED BY T. Reynolds		1/4 SECTION 2836,2936,3036 3136,3236,3336 3436,3536,3636
PROJECT NUMBER STP-5900(246)		

REGISTERED PROFESSIONAL ENGINEER 44962PE OREGON JANUARY 08, 2009 NORBERTO A. DE ADRE
Nobert Adre 4/12/13
Expires:12/31/2013

APPROVALS:

PRINCIPAL ENGINEER — 4/16/13 — REG. PROF. ENGR. NO. 53882PE

CITY ENGINEER — REG. PROF. ENGR. NO. 51538PE

CITY OF PORTLAND BUREAU OF TRANSPORTATION

CHARLIE HALES
STEVE TOWNSEN, P.E.

MAYOR
CITY ENGINEER

CITY OF PORTLAND, OREGON 1851

NE/SE 50s Bikeway: NE Thompson to SE Woodstock

MULTNOMAH COUNTY

SIGNALIZATION PLAN
E. Burnside St. & 53rd Ave.

SHEET NO. TS-02

Bid Documents

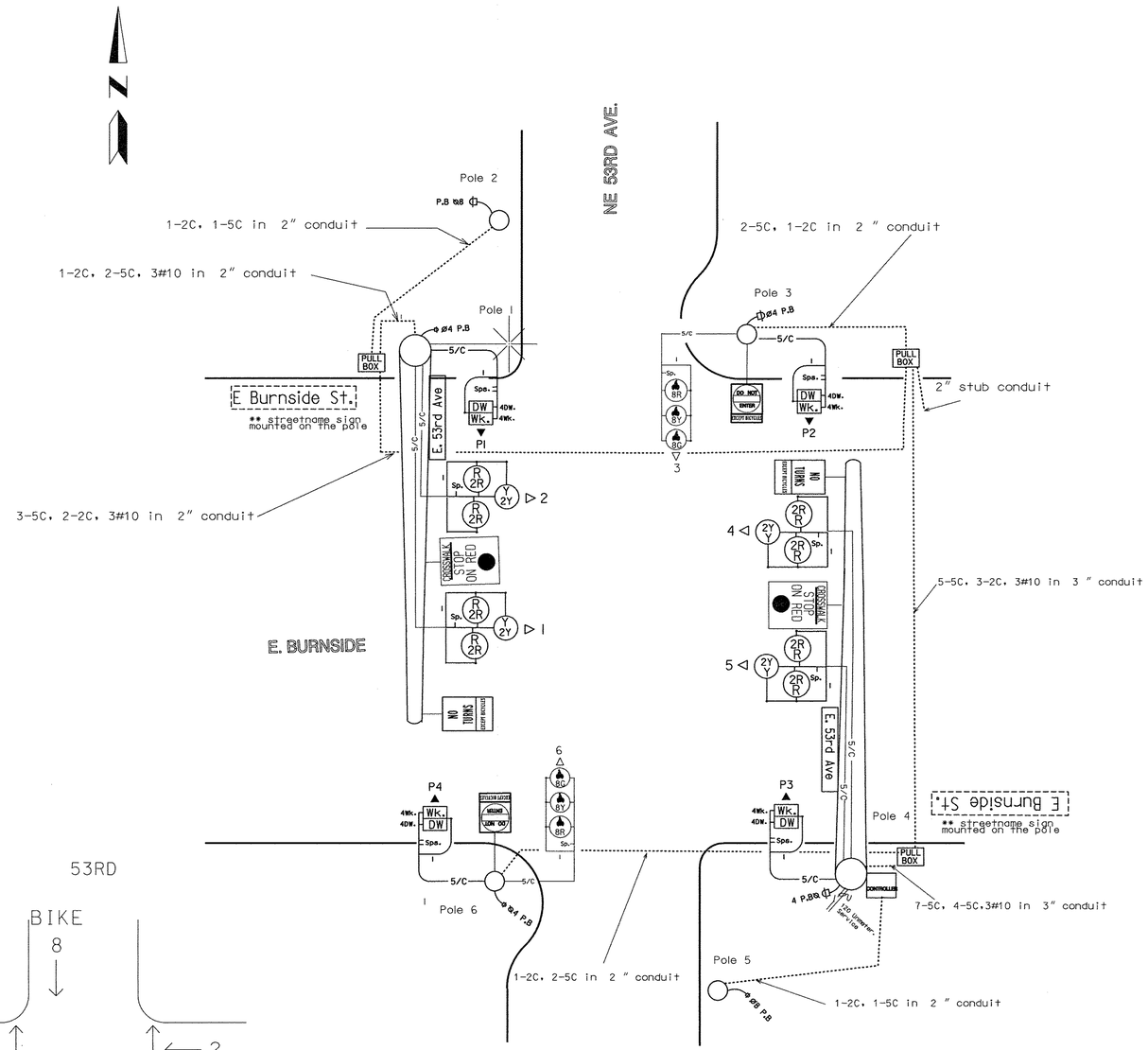

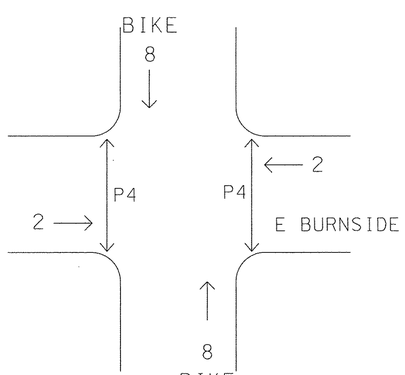

PHASE DIAGRAM

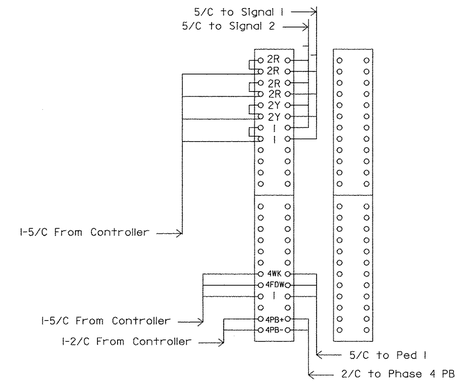

POLE 1 RECESSED TERM. CABINET

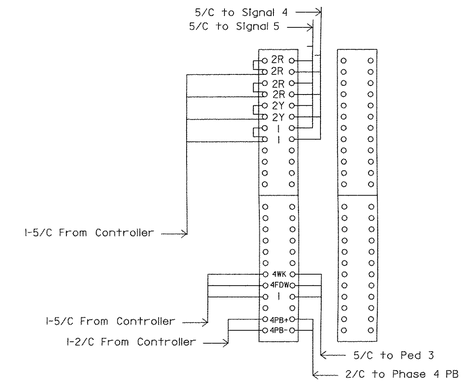

POLE 4 RECESSED TERM. CABINET

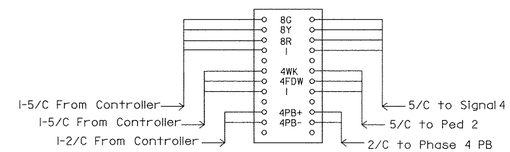

POLE 3 TERMINAL CAN

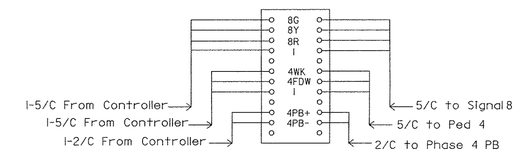

POLE 6 TERMINAL CAN

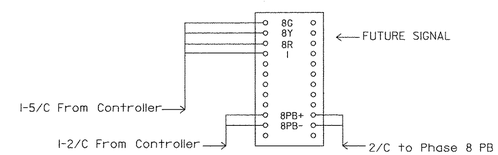

POLE 2 TERMINAL CAN

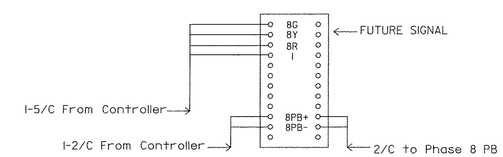

POLE 5 TERMINAL CAN

CONSTRUCTION NOTES:

- TERMINATE BIKE SIGNALS TO PH 4 LOAD SWITCH
  RE-ASSIGN TO PH 4 LOAD SWICTH TO PH 8 (TIMING ENGINEER)

NO.	DATE	DESCRIPTION	APPD.

REVISION

DESIGNED BY N. Adre M. Haines	DATE APPROVED Mar. 2013	INTER. NUMBER 6602
CAD BY N. Adre M. Haines	DIV. ENGINEER P. Koonce	PROJECT NO. T00121
CHECKED BY T. Reynolds		1/4 SECTION 2836,2936,3036 3136,3236,3336 3436,3536,3636
PROJECT NUMBER STP-5900(246)		

REGISTERED PROFESSIONAL ENGINEER 44962PE OREGON JANUARY 08, 2003 NORBERTO ADRE
Norberto Adre 4/9/13
Expires 12/31/2013

APPROVALS:

Peter J. Koonce 4/9/13
PRINCIPAL ENGINEER — REG. PROF. ENGR. NO. 53882PE

Steve Townsen
CITY ENGINEER — REG. PROF. ENGR. NO. 51538PE

CITY OF PORTLAND BUREAU OF TRANSPORTATION

CHARLIE HALES, MAYOR
STEVE TOWNSEN, P.E., CITY ENGINEER

CITY OF PORTLAND, OREGON 1851

NE/SE 50s Bikeway: NE Thompson to SE Woodstock

MULTNOMAH COUNTY

TRAFFIC SIGNAL
Wiring Diagram
E. Burnside St. at 53rd

SHEET NO. TS-03

Plot Date: 4/8/2013 5:45:15 PM Filename: S:\PROJECTS\T00121 - 50's Bikeway Woodstock Blvd-Thompson St, SE-NE\CAD\PLAN_SHEETS\SHT TS-01TRAFFIC SIGNALS\TS-03 Wiring Burnside at 53rd.dgn

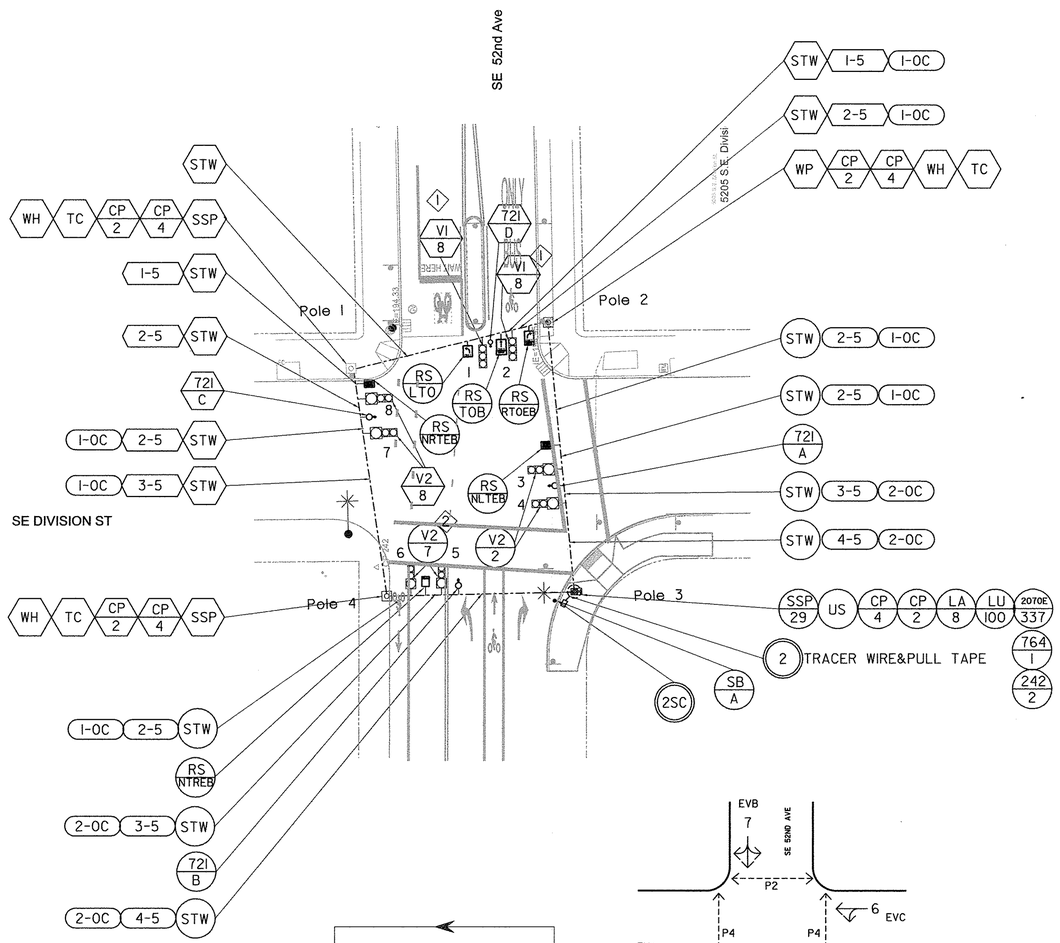

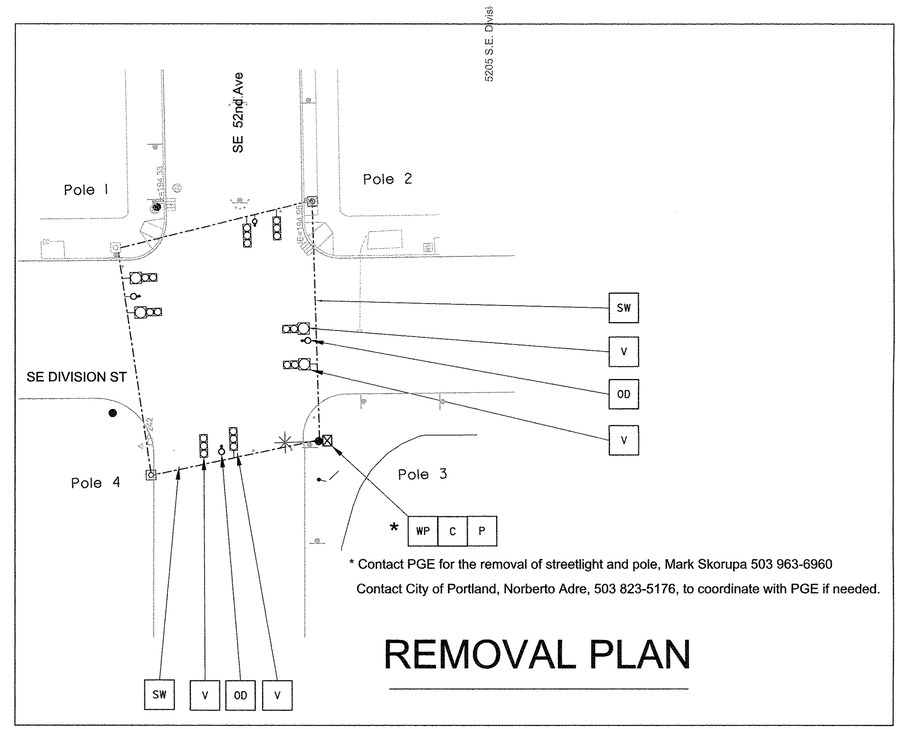

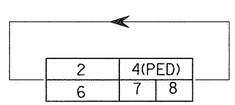

PHASE ROTATION

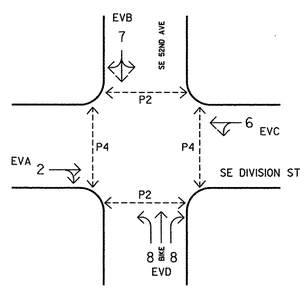

PHASE DIAGRAM

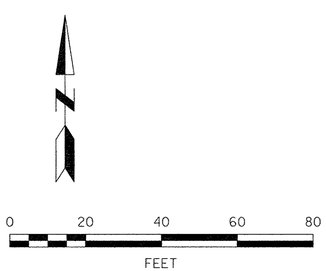

CONSTRUCTION NOTES:

1. TERMINATE VEHICLE SIGNAL# 1& 2 TO PH 4 LOAD SWITCH RE-ASSIGN TO PH 4 LOAD SWICTH TO PH 8 (TIMING ENGINEER)
2. TERMINATE VEHICLE SIGNAL# 5 & 6 TO PH 3 LOAD SWITCH RE-ASSIGN TO PH 3 LOAD SWICTH TO PH 7 (TIMING ENGINEER)

PULL NEW OPTICOM CABLE FOR ALL 721 OPTICOM RECEIVERS TERMINATE AS IN PLAN

POLE ENTRANCE CHART

SE Division St. at 52rd Ave.

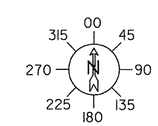

POLE NO.	POLE TYPE	LUMINAIRE ARM	HAND HOLE	TERMINAL CAN	SERVICE. CABINET	CONTROLLER	PEDESTRIAN SIGNAL	
3	SSP	270	270	180	0	90	90 & 180	

SSP - STEEL STRAIN POLE

NO.	DATE	DESCRIPTION	APPD.

REVISION

DESIGNED BY N. Adre M. Haines	DATE APPROVED Mar. 2013	INTER. NUMBER 4018
CAD BY N. Adre M. Haines	DIV. ENGINEER P. Koonce	PROJECT NO. T00121
CHECKED BY D. Hatch		1/4 SECTION 2836,2936,3036 3136,3236,3336 3436,3536,3636
PROJECT NUMBER STP-5900(246)		

REGISTERED PROFESSIONAL ENGINEER 44962PE OREGON JANUARY 08, 2009 NORBERTO A DRE
Norberto Adre 4/9/13
Expires: 12/31/2013

APPROVALS:

Peter Koonce 4/9/13
PRINCIPAL ENGINEER — REG. PROF. ENGR. NO. 53882PE

Steve Townsen
CITY ENGINEER — REG. PROF. ENGR. NO. 51538PE

CITY OF PORTLAND BUREAU OF TRANSPORTATION

CHARLIE HALES — MAYOR
STEVE TOWNSEN, P.E. — CITY ENGINEER

CITY OF PORTLAND OREGON 1851

NE/SE 50s Bikeway: NE Thompson to SE Woodstock

MULTNOMAH COUNTY

TRAFFIC SIGNAL
Signalization Plan
SE Division St at 52nd Ave

SHEET NO. TS-04

Plot Date: 4/8/2013 5:44:21PM Filename: S:\PROJECTS\T00121- 50's Bikeway Woodstock Blvd-Thompson St, SE-NE\CAD\PLAN_SHEETS\SHT TS-01TRAFFIC SIGNALS\TS-04 Signalization Division at 52nd.dgn

Bid Documents

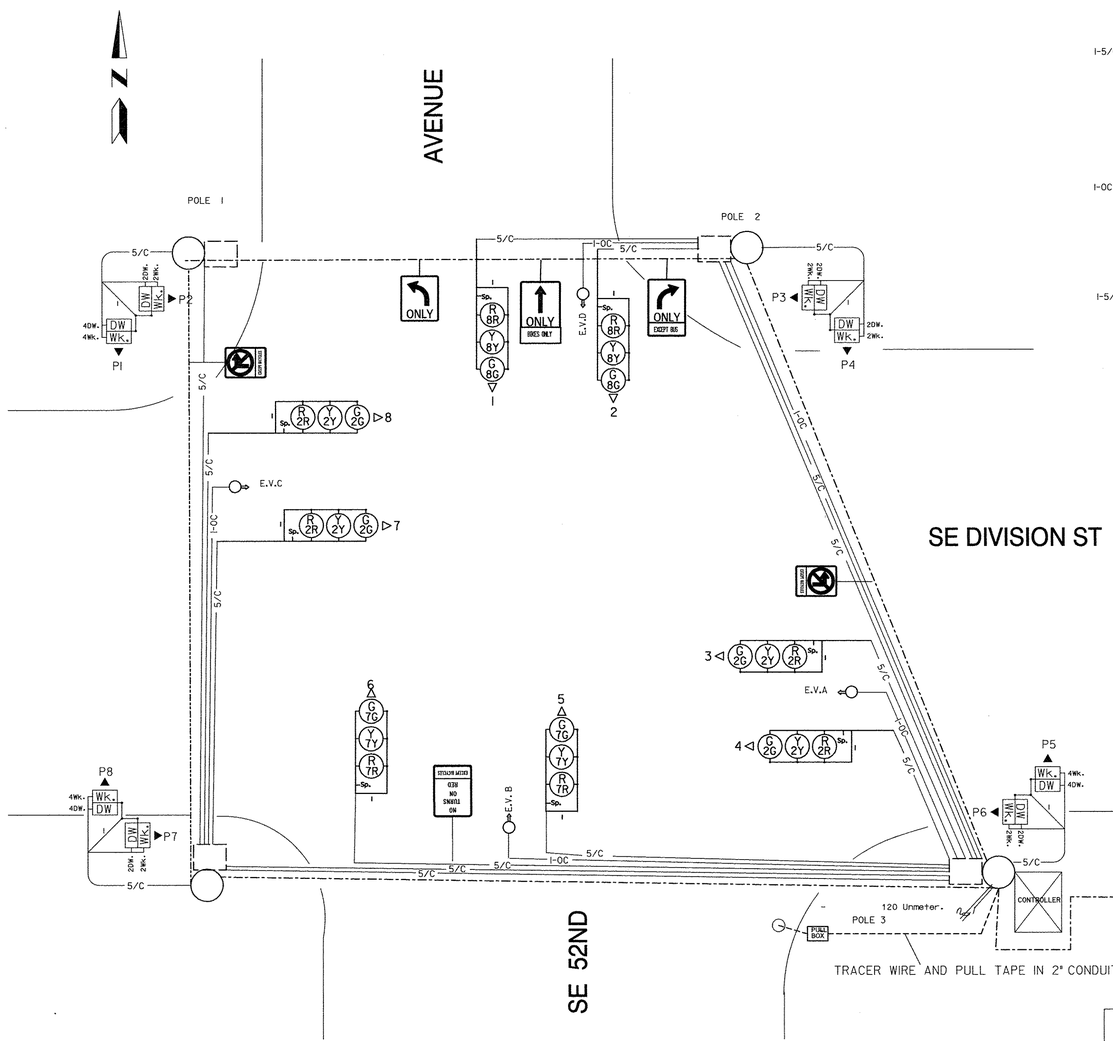

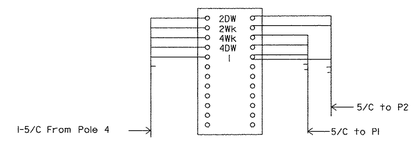

POLE 1 EXISTING TERMINAL CAN

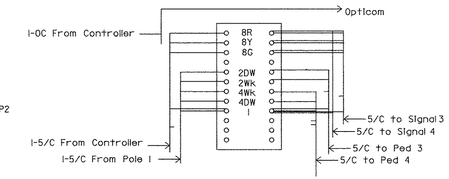

POLE 2 EXISTING TERMINAL CAN

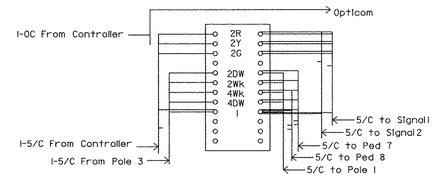

POLE 4 EXISTING TERMINAL CAN

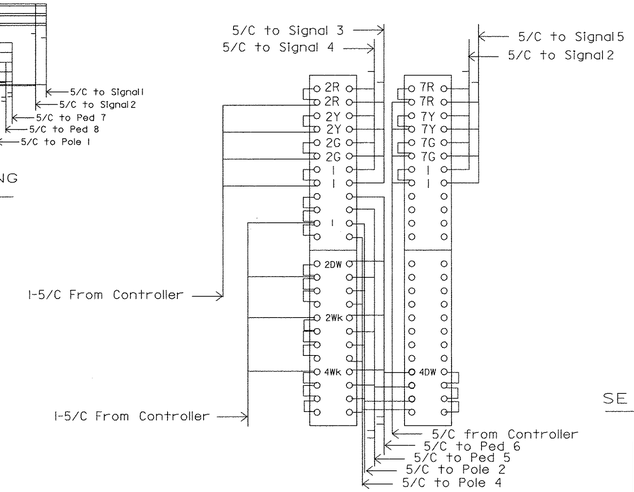

POLE 3 RECESSED TERM. CABINET

COLOR CODE

SE DIVISION ST. AT 52ND AVE.

CIRC.	5/C VEH.	5/C PED.	5/C P.B.
2G	Green		
2Y	Orange		
2R	Red		
8G	Green		
8Y	Orange		
8R	Red		
7G	Green		
7Y	Orange		
7R	Red		
2Wk		Green	
2DW		Red	
4Wk		Black	
4DW		Orange	
Neut. (1)	White	White	
SP	Black		
+24			

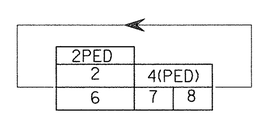

PHASE ROTATION

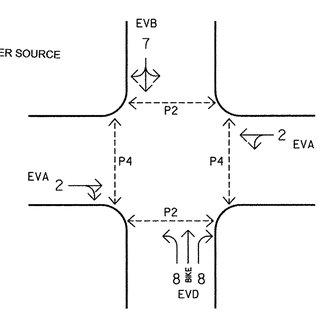

PHASE DIAGRAM

CONSTRUCTION NOTES:

- TERMINATE VEHICLE SIGNAL# 1& 2 TO PH 4 LOAD SWITCH RE-ASSIGN TO PH 4 LOAD SWICTH TO PH 8 (TIMING ENGINEER)
- TERMINATE VEHICLE SIGNAL# 5 & 6 TO PH 3 LOAD SWITCH RE-ASSIGN TO PH 3 LOAD SWICTH TO PH 7 (TIMING ENGINEER)
- PULL NEW OPTICOM CABLE FOR ALL 721OPTICOM RECEIVERS TERMINATE AS PER PLAN

NO.	DATE	DESCRIPTION	APPD.

REVISION

DESIGNED BY	DATE APPROVED	INTER. NUMBER
N. Adre M. Haines	Mar. 2013	4018
CAD BY N. Adre M. Haines	DIV. ENGINEER P. Koonce	PROJECT NO. T00121
CHECKED BY D. Hatch		1/4 SECTION 2636,2936,3036, 3136,3236,3336, 3436,3536,3636

PROJECT NUMBER STP-5900(246)

REGISTERED PROFESSIONAL ENGINEER 44962PE OREGON JANUARY 08, 2003 NORBERTO A DE ADRE 4/5/13

Expires 12/31/2013

APPROVALS:

PRINCIPAL ENGINEER — REG. PROF. ENGR. NO. 53882PE

CITY ENGINEER — REG. PROF. ENGR. NO. 51538PE

CITY OF PORTLAND BUREAU OF TRANSPORTATION

CHARLIE HALES, MAYOR
STEVE TOWNSEN, P.E., CITY ENGINEER

NE/SE 50s Bikeway: NE Thompson to SE Woodstock

MULTNOMAH COUNTY

TRAFFIC SIGNAL Wiring Diagram SE Division St. at 52nd Ave.

SHEET NO. TS-05

Plot Date: 4/8/2013 5:42:57 PM Filename: S:\PROJECTS\T00121- 50's Bikeway Woodstock Blvd-Thompson St. SE-NE\CAD\PLAN_SHEETS\SHT TS-01TRAFFIC SIGNALS\TS-05 Wiring Division at 52nd.dgn

Bid Documents

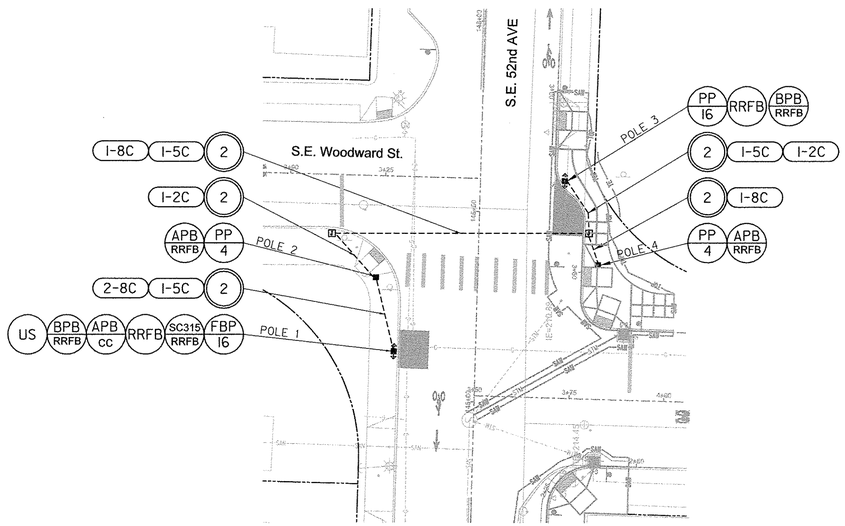

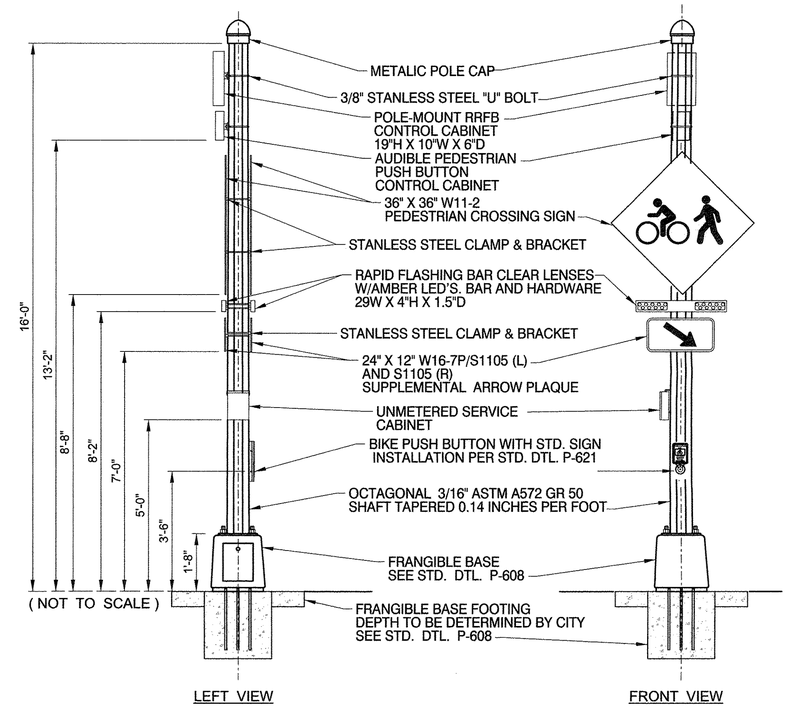

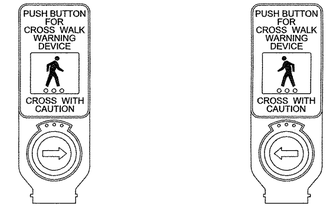

PEDESTRIAN PUSH BUTTON CROSSING SIGN DETAIL

(NOT TO SCALE)

BIKE PUSH BUTTON CROSSING SIGN DETAIL

(NOT TO SCALE)

N

0 20 40 60 80

FEET

NO.	DATE	DESCRIPTION	APPD.

REVISION

DESIGNED BY	DATE APPROVED	INTER. NUMBER
N. Adre M. Haines	Mar. 2013	4902
CAD BY N. Adre M. Haines	DIV. ENGINEER P. Koonce	PROJECT NO. T00121
CHECKED BY L. Radtke		1/4 SECTION 2836,2936,3036, 3136,3236,3336, 3436,3536,3636
PROJECT NUMBER STP-5900(246)		

REGISTERED PROFESSIONAL ENGINEER 44962PE OREGON JANUARY 08, 2003 KORBERTO ADRE

Expires: 12/31/2013

APPROVALS:

PRINCIPAL ENGINEER — REG. PROF. ENGR. NO. 53882PE

CITY ENGINEER — REG. PROF. ENGR. NO. 51538PE

CITY OF PORTLAND BUREAU OF TRANSPORTATION

CHARLIE HALES
STEVE TOWNSEN, P.E.

MAYOR
CITY ENGINEER

CITY OF PORTLAND, OREGON 1851

NE/SE 50s Bikeway: NE Thompson to SE Woodstock

MULTNOMAH COUNTY

RECTANGULAR RAPID FLASH BEACON
SE Woodward St. & 52nd Ave.

SHEET NO. TS-06

Plot Date: 4/8/2013 5:39:31 PM Filename: S:\PROJECTS\T00121 - 50's Bikeway Woodstock Blvd-Thompson St, SE-NE\CAD\PLAN_SHEETS\SHT TS-01 TRAFFIC SIGNALS\TS-06 RRFB Woodward at 52nd.dgn

Bid Documents

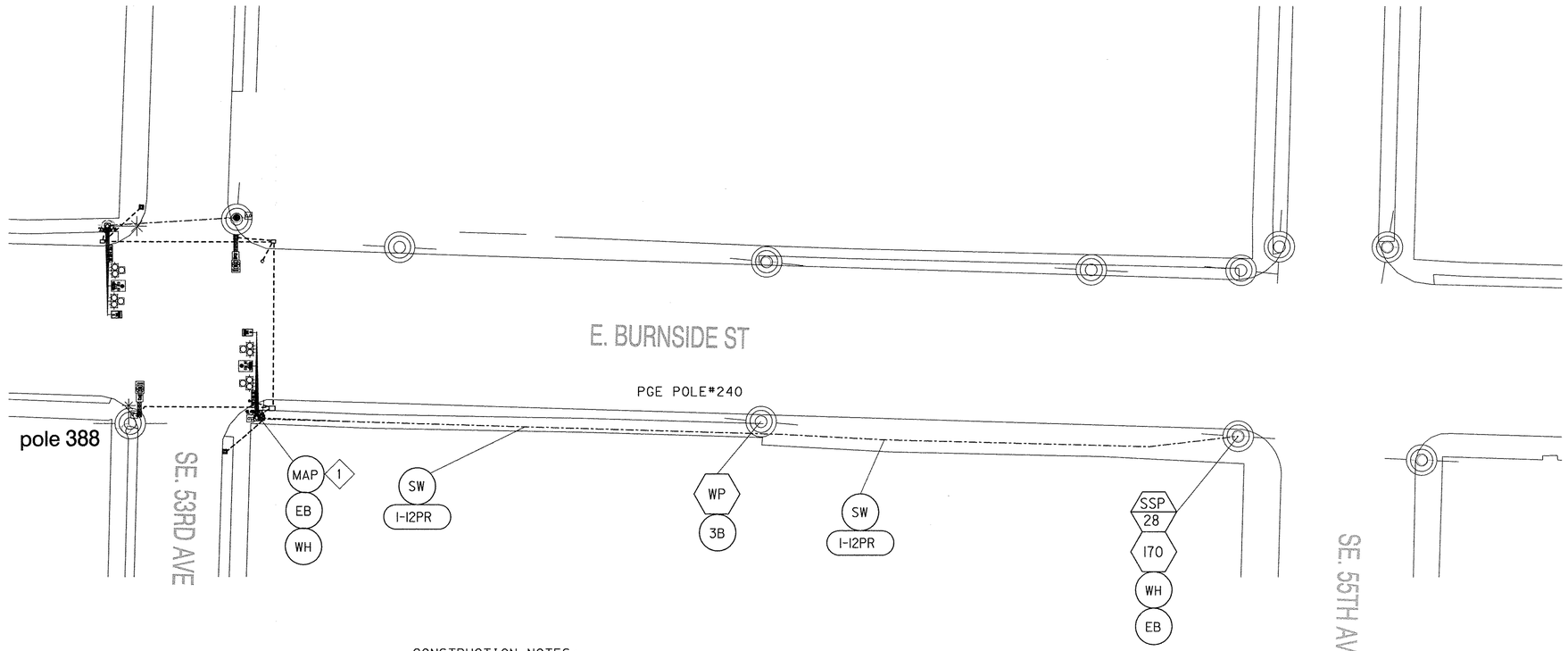

CONSTRUCTION NOTES:
- Contractor to obtain necessary permits for utility pole attachments and submit approval documents to project manager
- Installation shall comply with all applicable NESC, OJUA, and OPUC rules and requirements.

1 SEE SIGNALIZATION PLAN TS-02

N

0 20 40 60 80
FEET

NO.	DATE	DESCRIPTION	APPD.

REVISION

DESIGNED BY N. Adre M. Haines	DATE APPROVED Mar. 2013	INTER. NUMBER
CAD BY N. Adre M. Haines	DIV. ENGINEER P. Koonce	PROJECT NO. T00121
CHECKED BY R. Jennings		1/4 SECTION 2836,2936,3036 3136,3236,3336 3436,3536,3636
PROJECT NUMBER STP-5900(246)		

REGISTERED PROFESSIONAL ENGINEER 44962PE OREGON JANUARY 08, 2003 NORBERTO ADRE
Norberto Adre 4/9/13
Expires: 12/31/2013

APPROVALS:
Peter W. Koonce 4/9/13
PRINCIPAL ENGINEER REG. PROF. ENGR. NO. 53882PE
Steve Townsen
CITY ENGINEER REG. PROF. ENGR. NO. 51538PE

CITY OF PORTLAND BUREAU OF TRANSPORTATION
CHARLIE HALES MAYOR
STEVE TOWNSEN, P.E. CITY ENGINEER

CITY OF PORTLAND OREGON 1851

NE/SE 50s Bikeway: NE Thompson to SE Woodstock
MULTNOMAH COUNTY
TRAFFIC SIGNAL INTERCONNECT PLAN
E. Burnside St. : 53rd to 55th
SHEET NO. TS-07

Plot Date: 4/8/2013 5:41:39 PM Filename: S:\PROJECTS\T00121 - 50's Bikeway Woodstock Blvd-Thompson St, SE-NE\CAD\PLAN_SHEETS\SHT TS-01TRAFFIC SIGNALS\TS-07 Interconnect Burnside at 53rd_55th.dgn

Bid Documents

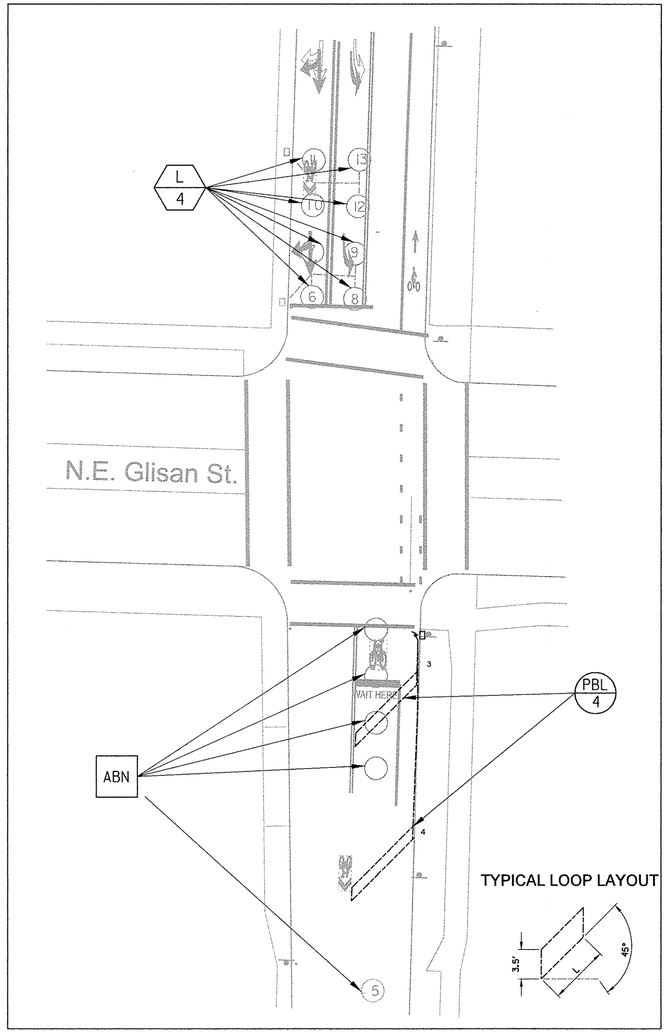

NE Glisan St. and 53rd Ave. Detection plan
Install a parrellogram loop (3.5' X 24'),
Protect existing loops,
replace if damaged during construction

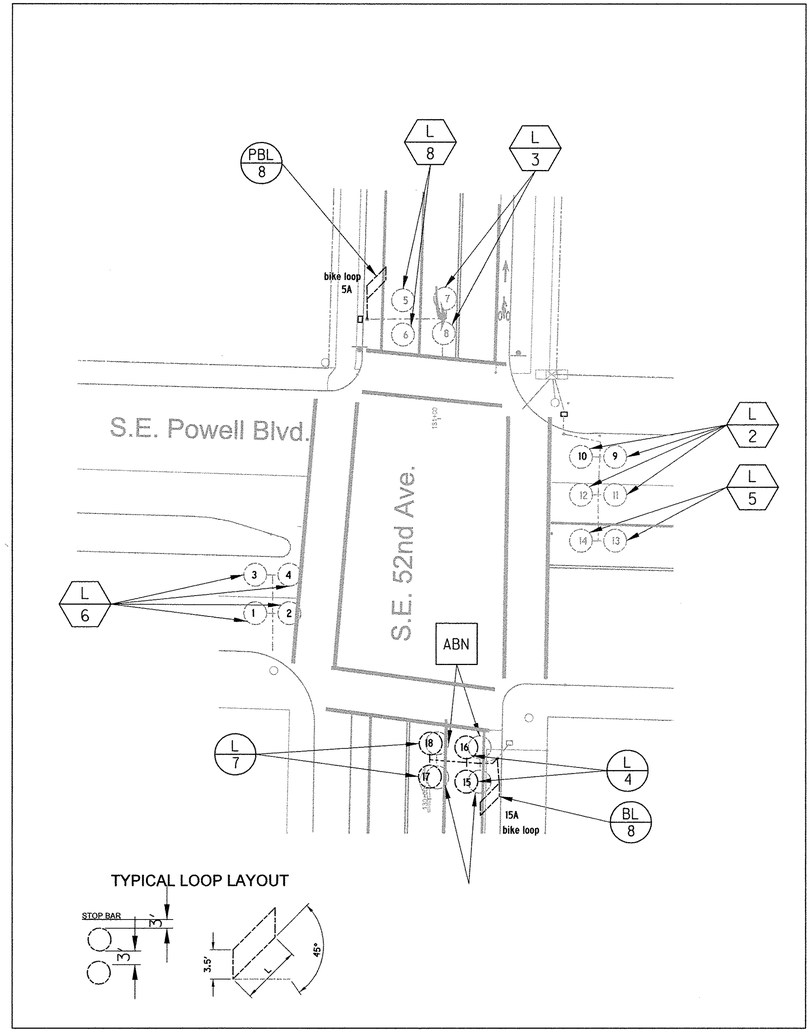

SE Powell Blvd. and 52nd Ave. Detection plan
Install vehicle loops 15,16,17&18
Install parallelogram bike loop 3.5'x 7': 5A, and 15A
Protect existing loops, replace if damaged during construction

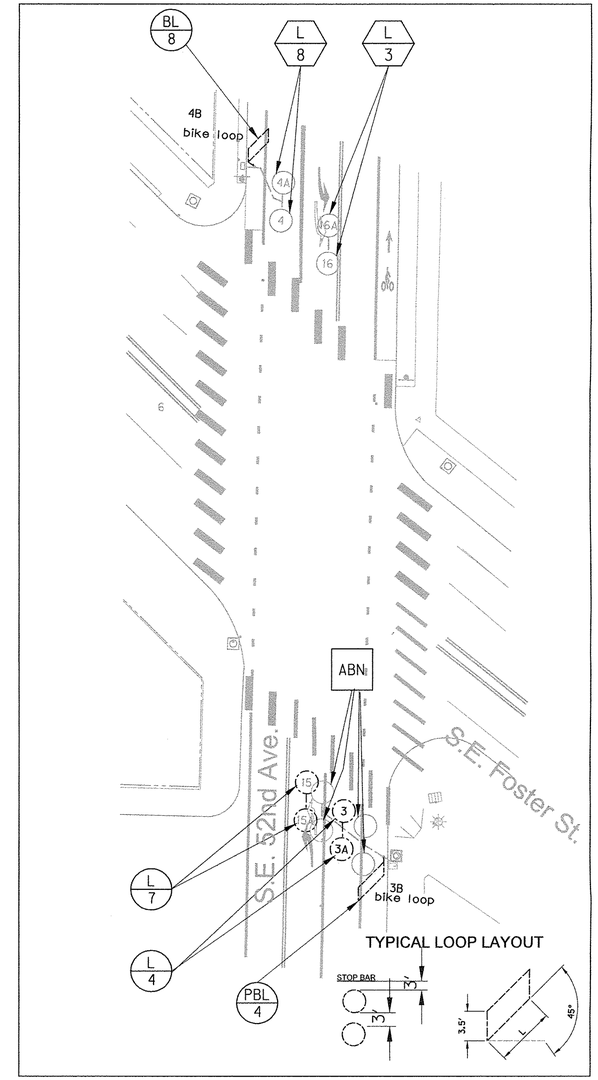

SE Powell Blvd. and 52rd Ave. Detection plan
Install vehicle loops 3,3A15 &15A
Install parallelogram bike loops : 3B 3.5'x 9.5'
4B 3.5x 7.5'

Protect existing loops, replace if damaged during construction

NO.	DATE	DESCRIPTION	APPD.

REVISION

DESIGNED BY N. Adre	DATE APPROVED Mar. 2013	INTER. NUMBER
CAD BY N. Adre	DIV. ENGINEER P. Koonce	PROJECT NO. T00121
CHECKED BY W. Rotich N. Adre		1/4 SECTION 2836,2936,3036 3136,3236,3336 3436,3536,3636
PROJECT NUMBER STP-5900(246)		

REGISTERED PROFESSIONAL ENGINEER 44962PE OREGON JANUARY 08, 2009 NORBERTO A DE ADRE
Norberto Adre 4/9/13
Expires: 12/31/2013

APPROVALS:
Peter J. Koonce 4/9/13
PRINCIPAL ENGINEER — REG. PROF. ENGR. NO. 53882PE
Steve Townsen
CITY ENGINEER — REG. PROF. ENGR. NO. 51538PE

CITY OF PORTLAND BUREAU OF TRANSPORTATION
CHARLIE HALES — MAYOR
STEVE TOWNSEN, P.E. — CITY ENGINEER

CITY OF PORTLAND OREGON 1851

NE/SE 50s Bikeway: NE Thompson to SE Woodstock
MULTNOMAH COUNTY
DETECTION PLAN
NE Glisan St & 53rd Ave.,SE Powell Blvd. & 52nd Ave.
SE Foster Rd. & 52nd Ave.
SHEET NO. TS-08

Plot Date: 4/8/2013 5:42:22 PM Filename: S:\PROJECTS\T00121- 50's Bikeway Woodstock Blvd-Thompson St. SE-NE\CAD\PLAN_SHEETS\SHT TS-01TRAFFIC SIGNALS\TS-08 Detection.dgn

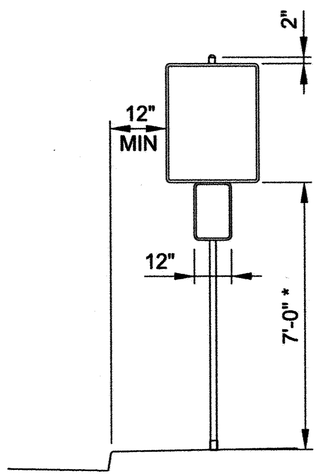

COMBINATION TRAFFIC/
PARKING SIGN PLACEMENT

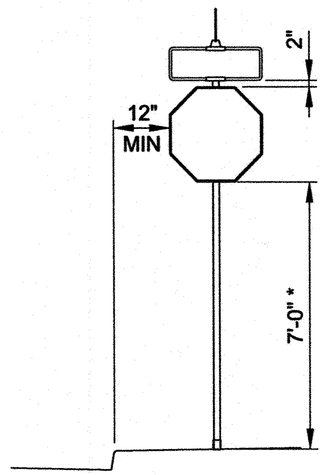

COMBINATION STOP/STREET NAME
SIGN PLACEMENT

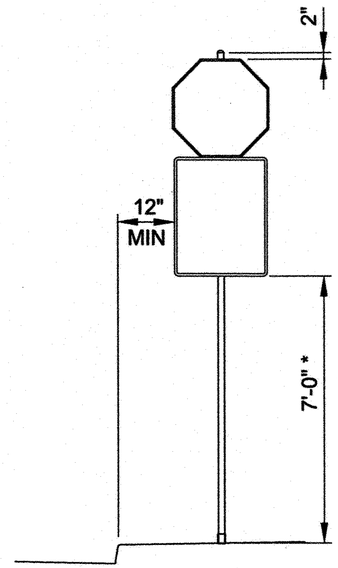

COMBINATION TRAFFIC
SIGN PLACEMENT

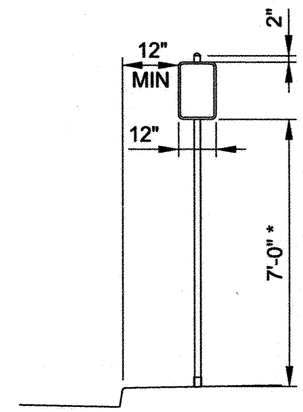

PARKING SIGN PLACEMENT

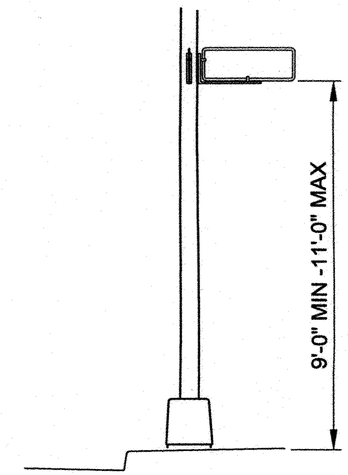

CANTILIVER STREET
NAME SIGN PLACEMENT

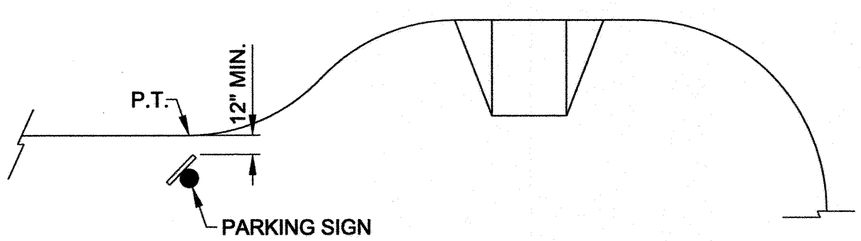

TYPICAL PARKING SIGN MOUNT PLACEMENT
ADJACENT TO CURB EXTENSION

SIGNING GENERAL NOTES:

1. USE SCHEDULE 40 STANDARD 2" PIPE CONFORMING TO ASTM A53, GRADE B.
2. ALL PIPE SHALL BE CAPPED WHEN STREET NAME SIGNS ARE NOT REQUIRED.
3. MAINTAIN MINIMUM 4' HORIZONTAL PEDESTRIAN CLEARANCE.
4. MAINTAIN MINIMUM 5' HORIZONTAL CLEARANCE FROM FIRE HYDRANTS & UTILITY POLES.
5. PARKING SIGNS SHALL BE ORIENTED AT A 45° TO TRAFFIC FLOW.
6. CANTILIVER MOUNTED STREET NAME SIGNS SHALL BE ORIENTED AWAY FROM THE CURBLINE.

* 7'-0" IS MINIMUM HEIGHT TO BOTTOM OF SIGN IN PEDESTRIAN ZONES.
8'-0" IS MINIMUM HEIGHT WHEN SIGNS ARE PLACED ABOVE A BIKE PATH.

The selection and use of this Standard Drawing, while designed in accordance with generally accepted engineering principles and practices, is the sole responsibility of the user.

Note:
All material and workmanship shall be in accordance with the City of Portland Standard Construction Specifications.

BUREAU OF TRANSPORTATION
CITY OF PORTLAND, OREGON
City Engineer

Standard Drawing Title

SIGN PLACEMENT

Effective Date: 03-20-2013

Calc. Book No.:

Baseline Report Date:

Standard Drawing No.

P-400

Plot Date: 3/18/2013 4:47:11PM Filename: U:\ustation\DGN\CITY OF PORTLAND - STANDARD DRAWINGS\SECTION DIVISIONS\3-STREETS\MICROSTATION\STD DRAWING NO P-400\PLOT_SHT_P-400.dgn
Plot Date: 3/28/2013 10:16:21AM Filename: S:_IL_Design\T00121 - 50's Bikeway Woodstock Blvd-Thompson St, SE-NE\CAD\PLAN_SHEETS\SHT P-400 PORTLAND STANDARD DRAWING\PLOT_SHT_ P-400.dgn
SCALE: 1/4" = 1'-0"

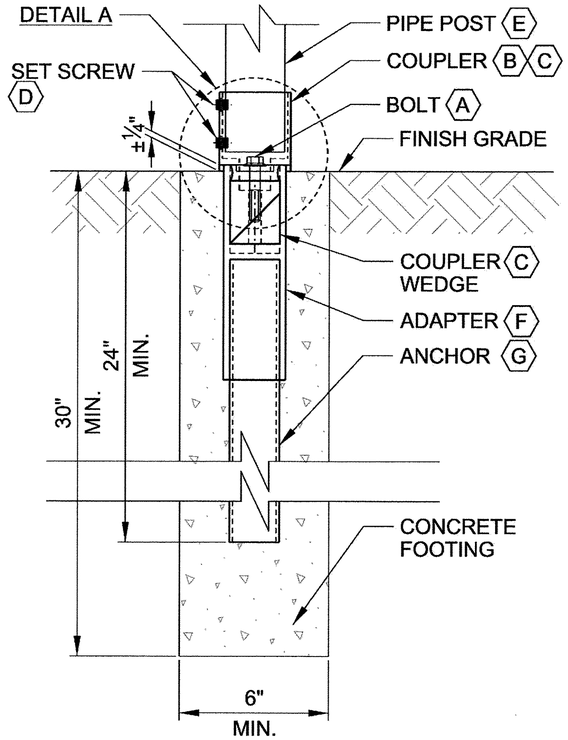

BREAKAWAY ANCHOR ASSEMBLY
LEVEL GRADE INSTALLATION

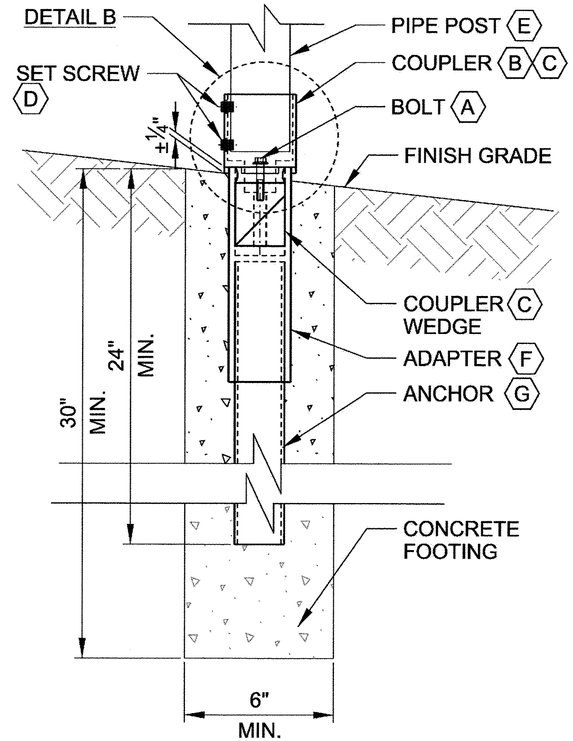

BREAKAWAY ANCHOR ASSEMBLY
SLOPED GRADE INSTALLATION

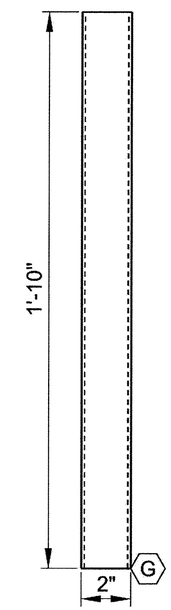

FRONT

ANCHOR

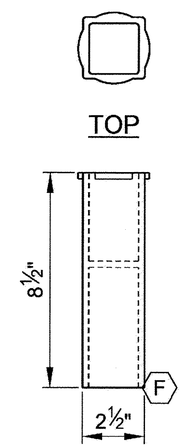

FRONT

ADAPTER

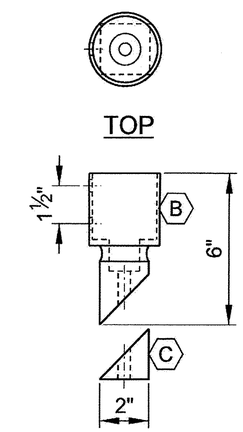

FRONT

COUPLER TOP

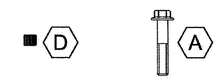

HARDWARE

ITEM NO.	DESCRIPTION	MATERIAL	QTY
A	½" X 2¼" USS HEX HEAD BOLT	GRADE 8 GALV. STEEL	1
B	2⅜" COUPLER TOP (ROUND)	CAST IRON	1
C	COUPLER WEDGE (2")	CAST IRON	1
D	½" USS SET SCREW	STAINLESS STEEL	2
E	ROUND POST 2.375" O.D.	SCHEDULE 40 STEEL	1
F	ADAPTER 2.5" O.D. X 8.5"	CAST IRON	1
G	ANCHOR 2.0" O.D. X 22"	STEEL	1

BREAKAWAY ANCHOR PARTS LIST

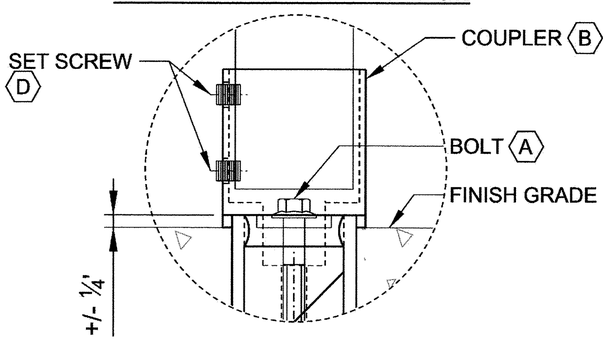

DETAIL A

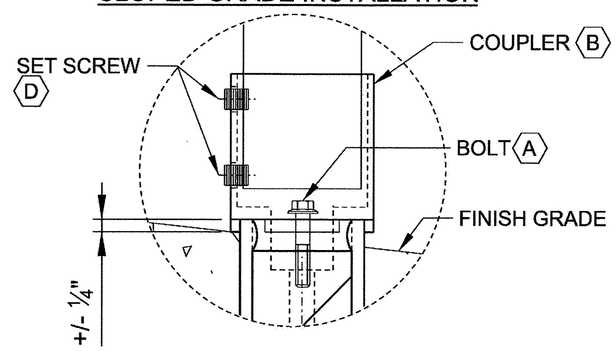

DETAIL B

NOTES:
1. FOR PIPE SIGN POST INSTALLATION IN EARTH.
2. CENTER BOLT 'A' AND SET SCREWS 'D' SHALL BE TIGHTENED SECURELY SUCH THAT THE ENTIRE ASSEMBLY IS TIGHT.
3. FOR LEVEL INSTALLATIONS:
- THE ANCHOR 'G' AND ADAPTER 'F' SHALL BE PLACED SUCH THAT THE BOTTOM OF THE LIP SURROUNDING THE TOP OF ADAPTER IS AT FINISH GRADE.
4. FOR SLOPED INSTALLATIONS:
- THE ANCHOR 'G' SHALL BE PLACED AT TOP OF FINISH GRADE RELATIVE TO THE UPPER SIDE OF THE SLOPE SUCH THAT NO PART OF THE ANCHOR IS BELOW FINISH GRADE AT ANY POINT.
5. EXTREME CARE SHALL BE TAKEN TO ENSURE THE ANCHOR ASSEMBLY IS PLACED VERTICALLY IN THE GROUND. THE ENTIRE SIGN INSTALLATION SHALL BE PLUMB AND TIGHT WHEN INSTALLATION IS COMPLETE.
6. FOR OTHER INSTALLATION DETAILS FOLLOW MANUFACTURER'S INSTRUCTIONS.

The selection and use of this Standard Drawing, while designed in accordance with generally accepted engineering principles and practices, is the sole responsibility of the user.

BUREAU OF TRANSPORTATION
CITY OF PORTLAND, OREGON
Steve Townsend
Chief Engineer

Standard Drawing Title

BREAKAWAY ANCHOR
TRAFFIC SIGN SUPPORTS

Note:
All material and workmanship shall be in accordance with the City of Portland Standard Construction Specifications.

Effective Date: 04-18-11

Calc. Book No.:

Baseline Report Date:

Standard Drawing No.
P-405

Plot Date: 2/11/2013 6:06:53 AM Filename: S:_IL_Design\T00121- 50's Bikeway Woodstock Blvd-Thompson St, SE-NE\CAD\PLAN_SHEETS\SHT P-405 PORTLAND STANDARD DRAWING\PLOT_SHT_ P-405.dgn
Plot Date: 4/18/2011 3:57:02 PM Filename: U:\station\DGN\CITY OF PORTLAND - STANDARD DRAWINGS\SECTION DIVISIONS\3-STREETS\MICROSTATION\STD DRAWING NO P-405\PLOT_SHT_P-405_SIGN_PLACEMENT.dgn

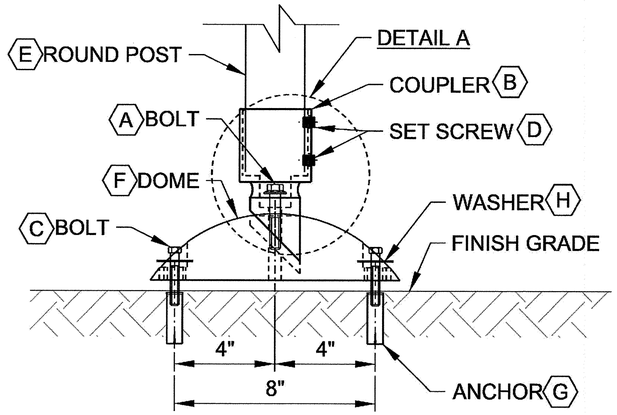

BREAKAWAY DOME ASSEMBLY
- LEVEL GRADE INSTALLATION

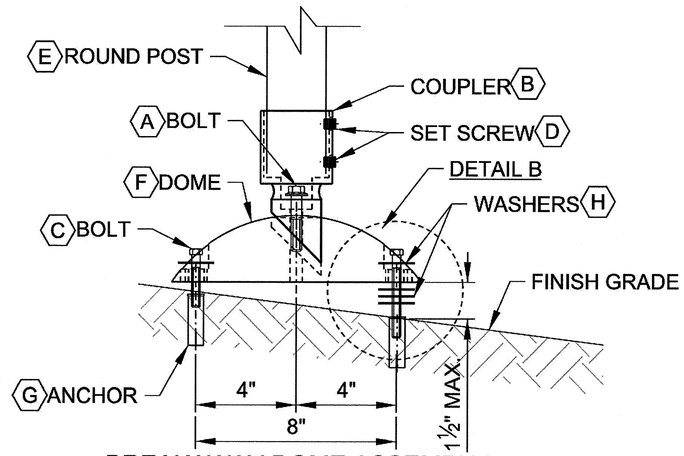

BREAKAWAY DOME ASSEMBLY
- SLOPED GRADE INSTALLATION

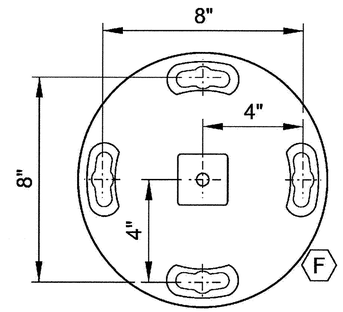

TOP

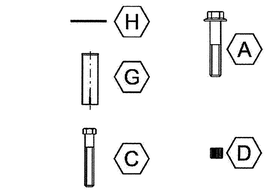

HARDWARE

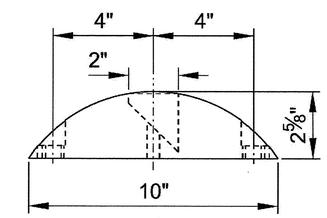

FRONT

DOME

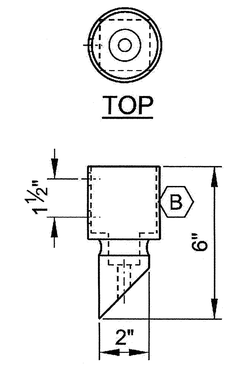

FRONT
COUPLER

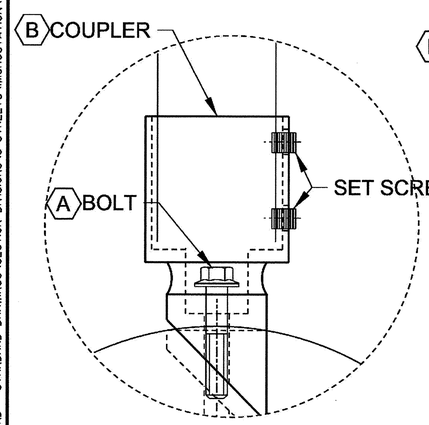

DETAIL A

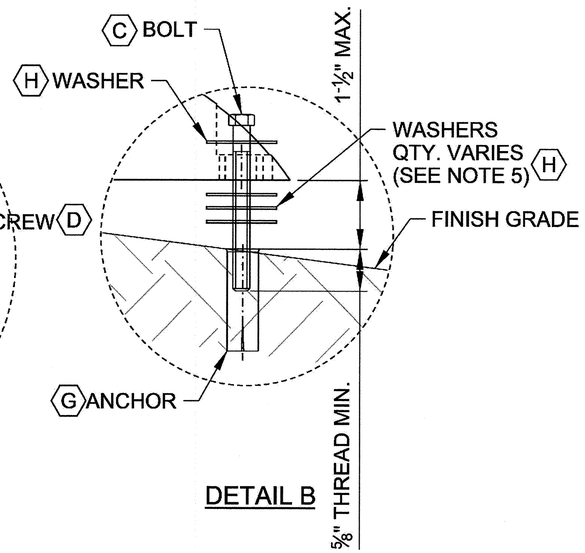

DETAIL B

ITEM NO.	DESCRIPTION	MATERIAL	QTY.
A	½"X 2 ¼"USS HEX HEAD BOLT	GRADE 8 GALV. STEEL	1
B	2⅜" COUPLER TOP (ROUND)	CAST IRON	1
C	½"X 1 ½" (MIN.) TO 3"(MAX.) USS HEX HEAD BOLT, 13 THREAD/INCH	GRADE 8 GALV. STEEL, ZINC FINISH	4
D	½" USS SET SCREW	STAINLESS STEEL	2
E	ROUND POST 2.375" O.D.	SCHEDULE 40 STEEL	1
F	ROUND DOME 10" DIA.X2⅝"	CAST ALUMINUM	1
G	½"X2" USS ANCHOR , 13 THREAD/INCH, 5/8" O.D.	STAINLESS STEEL	4
H	½" USS FLAT WASHER	GALV. STEEL, ZINC FINISH	4 (MIN.)

BREAKAWAY DOME PARTS LIST

NOTES:
1. FOR PIPE SIGN POST INSTALLATION IN SIDEWALK.
2. CENTER BOLT 'A' AND SET SCREWS 'D' SHALL BE TIGHTENED SECURELY SUCH THAT THE ENTIRE ASSEMBLY IS TIGHT.
3. THE ANCHOR HOLE SHALL BE DRILLED TO 5/8"DIAMETER. THE HOLE SHALL BE FREE OF DEBRIS BEFORE PLACING ANCHOR INTO HOLE.
4. ANCHORS 'G' MUST BE PRE-SET WITH HAND SETTING TOOL PRIOR TO INSTALLING BREAKAWAY DOME. EPOXY SHALL NOT BE USED.
5. FOR INSTALLATION ON SLOPED GRADES, LEVEL BREAKAWAY DOME BY STACKING WASHERS AS SHOWN SO THAT ENTIRE SIGN INSTALLATION IS PLUMB. USE LONGER BOLTS 'C' AS NECESSARY TO ACHIEVE MINIMUM ANCHOR PENETRATION WHERE LEVELING WASHER HEIGHT IS GREATER THAN ½-INCH, GROUT VOID BETWEEN SIDEWALK AND BREAKAWAY DOME. DO NOT INSTALL BREAKAWAY DOME SIGN SUPPORT IF LEVELING WASHER HEIGHT EXCEEDS 1-1/2 INCHES: CORE AND REPLACE SIDEWALK TO INSTALL BREAKAWAY ANCHOR SIGN SUPPORT INSTEAD.
6. FOR OTHER INSTALLATION DETAILS FOLLOW MANUFACTURER'S INSTRUCTIONS.

The selection and use of this Standard Drawing, while designed in accordance with generally accepted engineering principles and practices, is the sole responsibility of the user.

BUREAU OF TRANSPORTATION
CITY OF PORTLAND, OREGON
Steve Iverson
Chief Engineer

Standard Drawing Title

BREAKAWAY DOME
TRAFFIC SIGN SUPPORTS

Note:
All material and workmanship shall be in accordance with the City of Portland Standard Construction Specifications.

Effective Date: 04-18-11
Calc. Book No.:
Baseline Report Date:

Standard Drawing No.
P-406

Plot Date: 2/11/2013 6:08:41 AM Filename: S:_II_Design\T00121- 50's Bikeway Woodstock Blvd-Thompson St, SE-NE\CAD\PLAN_SHEETS\SHT P-406 PORTLAND STANDARD DRAWING\PLOT_SHT_ P-406.dgn
Plot Date: 4/18/2011 3:56:31 PM Filename: U:\ustation\DGN\CITY OF PORTLAND - STANDARD DRAWINGS\SECTION DIVISIONS\3-STREETS\MICROSTATION\STD DRAWING NO P-406\PLOT_SHT_P-406_SIGN_PLACEMENT.dgn

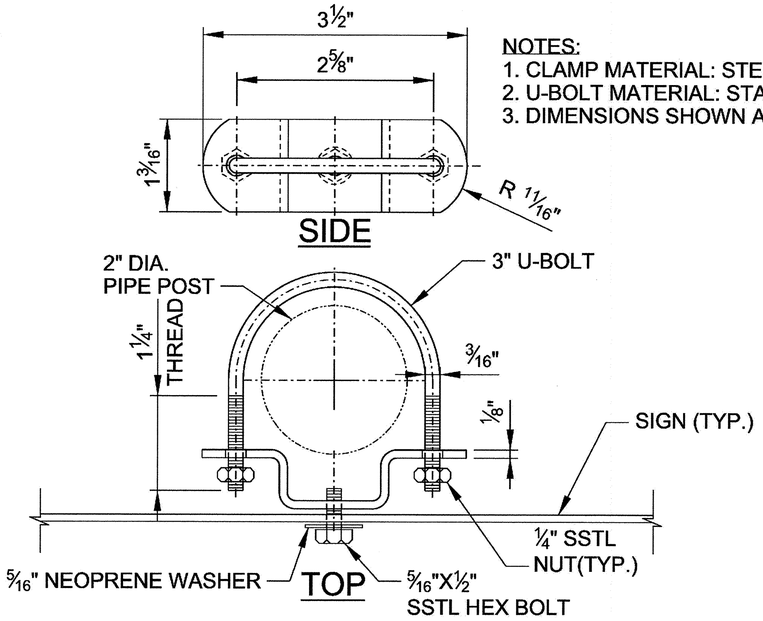

NOTES:
1. CLAMP MATERIAL: STEEL, ZINC COATED
2. U-BOLT MATERIAL: STAINLESS STEEL
3. DIMENSIONS SHOWN AFTER FINISH

U-BOLT SIGN BRACKET

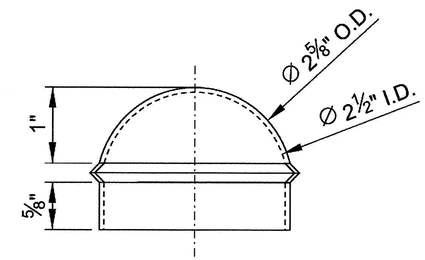

NOTES:
1. MATERIAL: CAST ALUMINUM
2. DIMENSIONS SHOWN AFTER FINISH.

PRESS ON DOME PIPE CAP

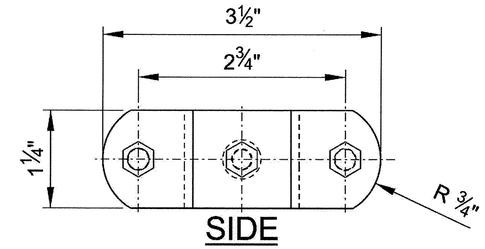

NOTES:
1. CLAMP MATERIAL: STEEL, ZINC COATED
2. DIMENSIONS SHOWN AFTER FINISH

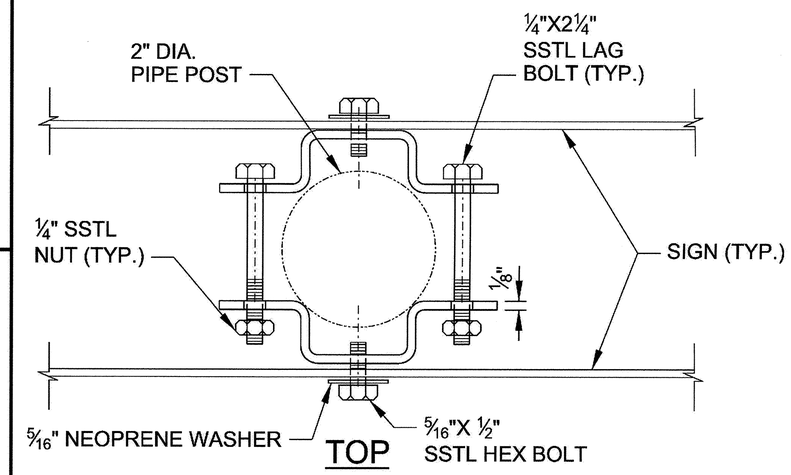

BACK-TO-BACK SIGN BRACKET

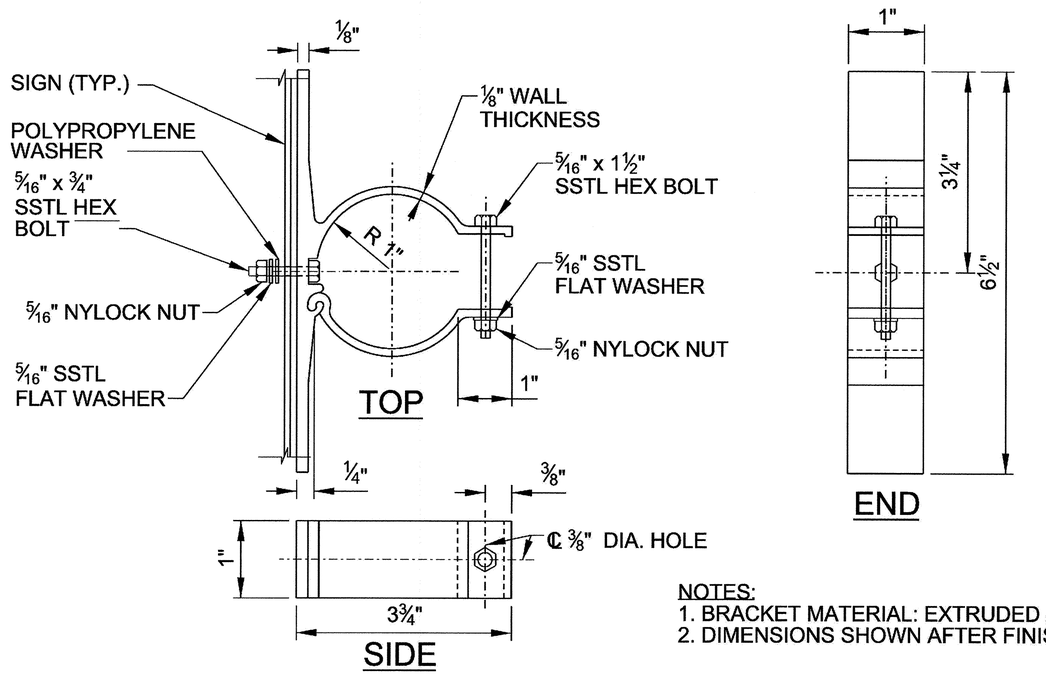

NOTES:
1. BRACKET MATERIAL: EXTRUDED ALUMINUM
2. DIMENSIONS SHOWN AFTER FINISH

EXTRUDED SIGN BRACKET

The selection and use of this Standard Drawing, while designed in accordance with generally accepted engineering principles and practices, is the sole responsibility of the user.

BUREAU OF TRANSPORTATION
CITY OF PORTLAND, OREGON
Steve Iverson
Chief Engineer

Standard Drawing Title

SIGN BRACKET, CAP DETAILS

Note:
All material and workmanship shall be in accordance with the City of Portland Standard Construction Specifications.

Effective Date: 03-17-11

Calc. Book No.:

Baseline Report Date:

Standard Drawing No.

P-410

SCALE: 3" = 1'
Plot Date: 2/11/2013 6:10:32 AM Filename: S:_II_Design\T00121 - 50's Bikeway Woodstock Blvd-Thompson St, SE-NE\CAD\PLAN_SHEETS\SHT P-410 PORTLAND STANDARD DRAWING\PLOT_SHT_ P-410.dgn
Plot Date: 4/18/2011 4:07:27 PM Filename: U:\ustation\DGN\CITY OF PORTLAND - STANDARD DRAWINGS\SECTION DIVISIONS\3-STREETS\MICROSTATION\STD DRAWING NO P-410\PLOT_SHT_P-410.dgn

Bid Documents

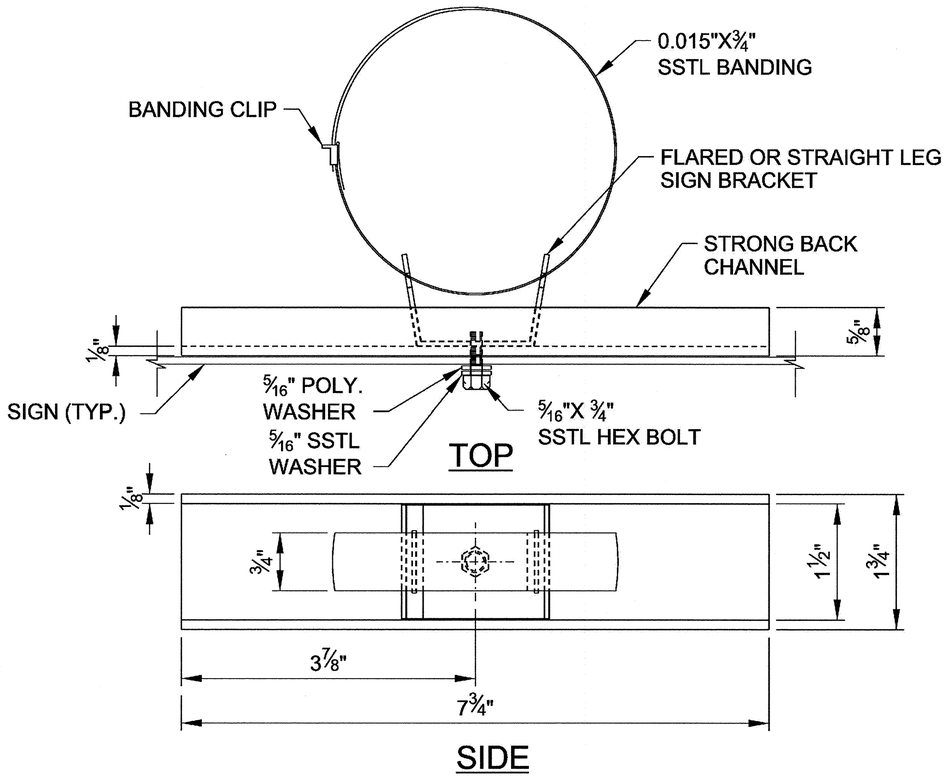

SIGN MOUNTING ASSEMBLY
(FOR WOOD OR METAL POLES)

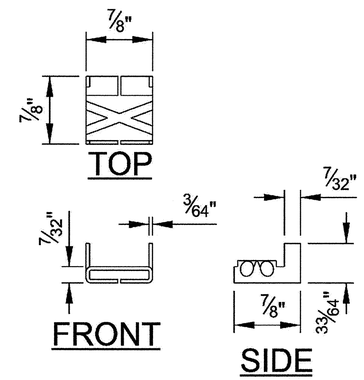

SIGN BRACKET BANDING CLIP

NOTES:
1. CLIP MATERIAL: STAINLESS STEEL
2. DIMENSIONS SHOWN AFTER FINISH

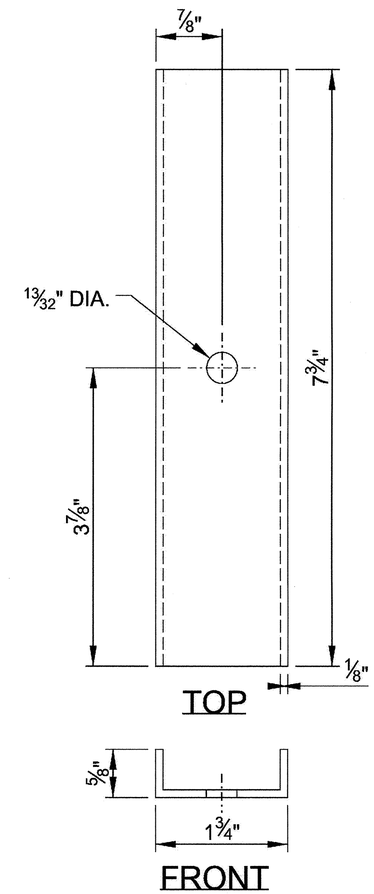

NOTES:
1. BRACKET MATERIAL: EXTRUDED ALUMINUM.
2. DIMENSIONS SHOWN AFTER FINISH

STRONG-BACK CHANNEL

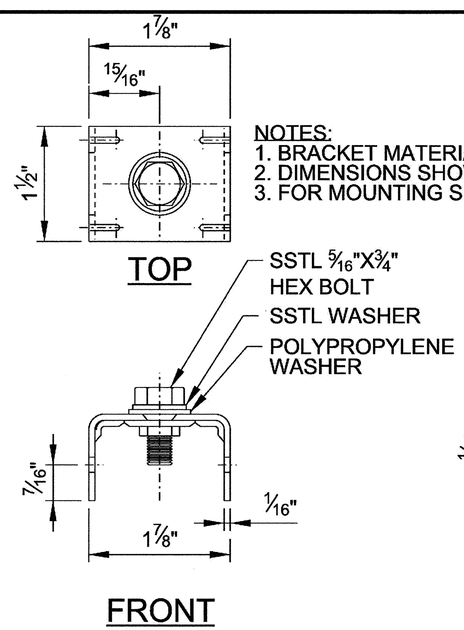

NOTES:
1. BRACKET MATERIAL: STAINLESS STEEL
2. DIMENSIONS SHOWN AFTER FINISH
3. FOR MOUNTING SIGNS ON WOOD POLES

STRAIGHT LEG SIGN BRACKET

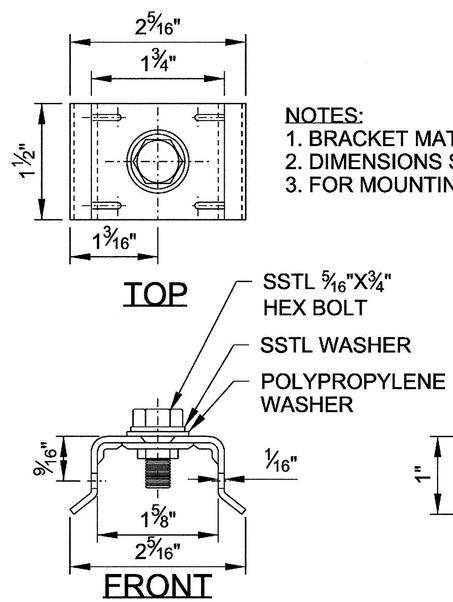

NOTES:
1. BRACKET MATERIAL: STAINLESS STEEL
2. DIMENSIONS SHOWN AFTER FINISH
3. FOR MOUNTING SIGNS ON METAL POLES

FLARED LEG SIGN BRACKET

The selection and use of this Standard Drawing, while designed in accordance with generally accepted engineering principles and practices, is the sole responsibility of the user.

BUREAU OF TRANSPORTATION
CITY OF PORTLAND, OREGON
Steve Iourman
Chief Engineer

Standard Drawing Title

SIGN BRACKET,
STRONG-BACK DETAILS

Note:
All material and workmanship shall be in accordance with the City of Portland Standard Construction Specifications.

Effective Date: 03-17-11

Calc. Book No.:

Baseline Report Date:

Standard Drawing No.

P-411

SCALE: 3" = 1'
Plot Date: 2/11/2013 6:12:04 AM Filename: S:_II_Design\T00121 - 50's Bikeway Woodstock Blvd-Thompson St, SE-NE\CAD\PLAN_SHEETS\SHT P-411PORTLAND STANDARD DRAWING\PLOT_SHT_ P-411.dgn
Plot Date: 4/18/2011 4:08:56 PM Filename: U:\ustation\DGN\CITY OF PORTLAND - STANDARD DRAWINGS\SECTION DIVISIONS\3-STREETS\MICROSTATION\STD DRAWING NO P-411\PLOT_SHT_P-411.dgn

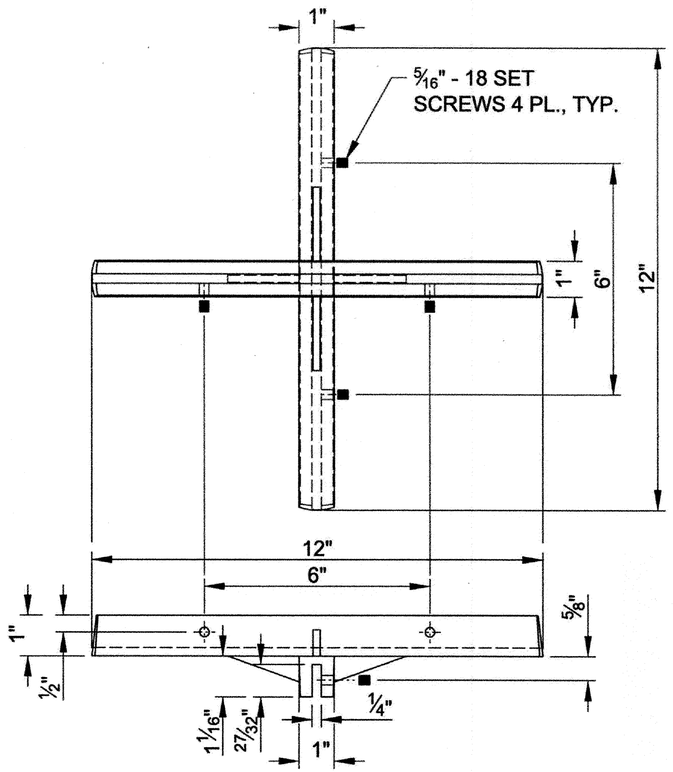

DOUBLE SNS CROSS-PIECE 12"

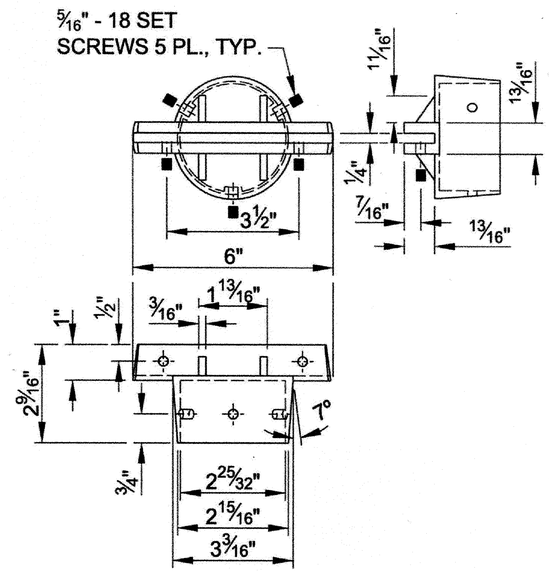

SINGLE SNS POST CAP 6"

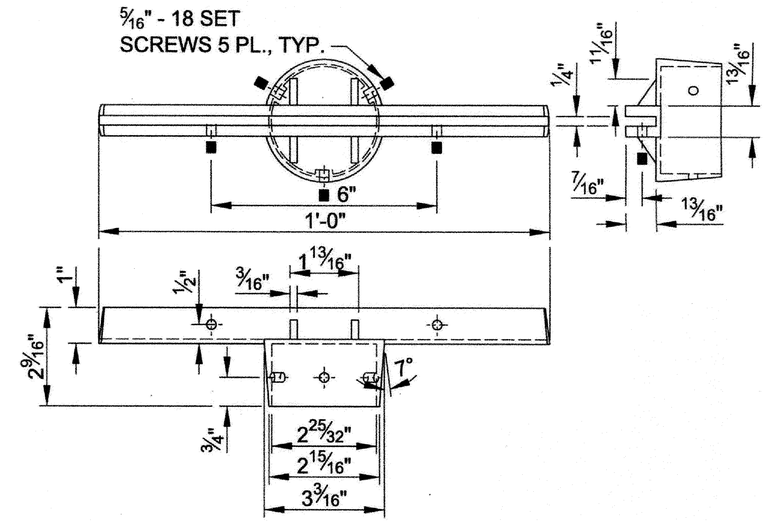

SINGLE SNS POST CAP 12"

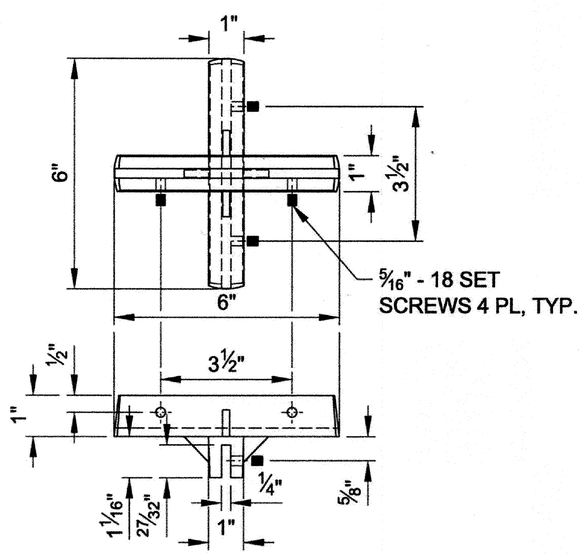

DOUBLE SNS CROSS-PIECE 6"

NOTES:
1. BRACKET MATERIAL: CAST ALUMINUM ALLOY A380
2. SET SCREW MATERIAL : STAINLESS STEEL
3. DIMENSIONS SHOWN AFTER FINISH
4. APPLY 25-40 INCH-POUNDS OF PRESSURE TO SET SCREWS

The selection and use of this Standard Drawing, while designed in accordance with generally accepted engineering principles and practices, is the sole responsibility of the user.

BUREAU OF TRANSPORTATION
CITY OF PORTLAND, OREGON
Steve Tomm
Chief Engineer

Standard Drawing Title

STREET NAME SIGN HARDWARE DETAILS

Note:
All material and workmanship shall be in accordance with the City of Portland Standard Construction Specifications.

Effective Date: 04-14-11

Calc. Book No.:

Baseline Report Date:

Standard Drawing No.

P-412

Plot Date: 2/11/2013 6:13:37 AM Filename: S:_IL_Design\T00121 - 50's Bikeway Woodstock Blvd-Thompson St, SE-NE\CAD\PLAN_SHEETS\SHT P-412 PORTLAND STANDARD DRAWING\PLOT_SHT_ P-412.dgn
Plot Date: 4/14/2011 10:08:41 AM Filename: U:\ustation\DGN\CITY OF PORTLAND - STANDARD DRAWINGS\SECTION DIVISIONS\3-STREETS\MICROSTATION\STD DRAWING NO P-412\PLOT_SHT_P-412.dgn
SCALE: 3/8" = 1'-0"

Bid Documents

DIMENSIONING TABLE

SIGN LOCATION	POSTED SPEED (MPH)	NUMBER OF LANES	PRIMARY LETTER HEIGHT (IN.) X	MAXIMUM SIGN LENGTH (IN.) L	SIGN CODE		SIGN TYPE
					DOUBLE SIDED	SINGLE SIDED	
OVERHEAD MAST ARM	ALL	ALL	8	84	N/A	G5521V	"G5"
GROUND MOUNT	>40MPH	4+	6	60	G5506	G5506A	"G"
		2-3	4	48	G5501	G5501A	"G"
	≤40MPH	ALL	4	48	G5501	G5501A	"G"

NUMBERED STREET

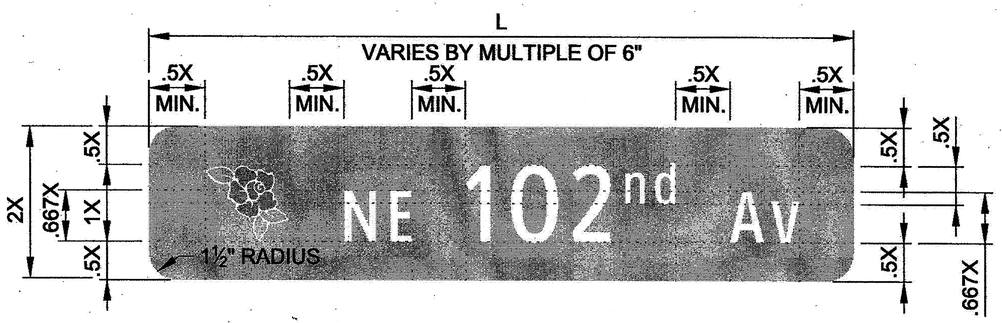

NON-NUMBERED STREET

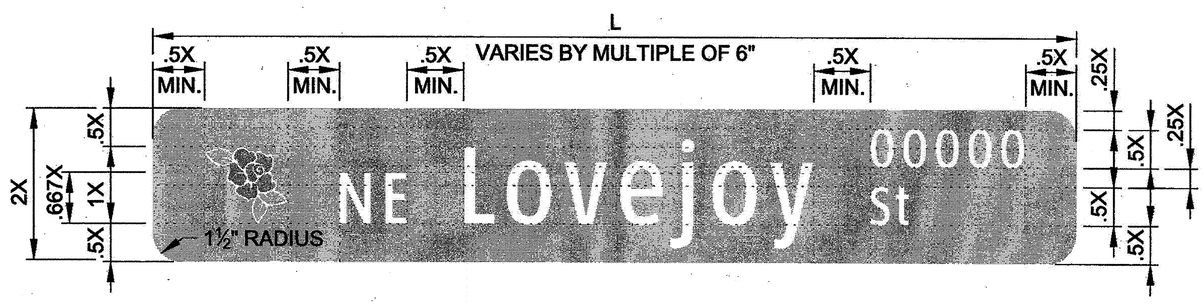

NOTES:

1. STREET NAME SIGNS SHALL BE MANUFACTURED WITH 0.125"THICK RECTANGULAR FLAT ALUMINUM BLADES WITH 1 ½"-RADIUS CIRCULAR FILETS AT THE CORNERS.
2. STREET NAME SIGNS SHALL BE DOUBLE SIDED WHEN CANTILEVER MOUNTED OR CENTER MOUNTED ON TOP OF A PIPE SIGN POST. ALL OTHER STREET NAME SIGNS SHALL BE SINGLE SIDED.
3. LEGENDS SHALL BE CLEARVIEWHWY 2-W FONT. CLEARVIEWHWY 1-W FONT MAY BE USED WITH ENGINEER'S APPROVAL WHEN THE MAXIMUM SIGN LENGTH WOULD OTHERWISE BE VIOLATED.
4. STREET NAME SIGNS GREATER THAN 36" LONG AND CENTERED MOUNTED ON TOP OF A PIPE SIGN POST SHALL BE MOUNTED WITH 12" HARDWARE. ALL OTHER STREET NAME SIGNS CENTERED MOUNTED ON TOP OF A PIPE SIGN POST SHALL BE MOUNTED WITH 6" HARDWARE. STREET NAME SIGNS GREATER THAN 36"LONG AND CANTILEVER MOUNTED TO A POLE SHALL REQUIRE THE CANTILEVER EXTENSION. SEE PBOT DETAIL P-629 FOR OVERHEAD MAST ARM MOUNTING INFORMATION.
5. THE CITY'S "ROSE" LOGO SHALL BE USED ON OVERHEAD STREET NAME SIGNS ONLY. THE "ROSE" LOGO DESIGN SHALL BE OBTAINED FROM THE CITY OF PORTLAND OR AN APPROVED OUTSIDE SOURCE. THE LOGO MAY BE OMITTED ON OVERHEAD STREET NAME SIGNS WITH ENGINEER'S APPROVAL WHEN THE MAXIMUM SIGN LENGTH WOULD OTHERWISE BE VIOLATED. FOR GROUND MOUNTED STREET NAME SIGNS, DELETE THE "ROSE" LOGO AND THE SPACE BETWEEN THE LOGO AND LETTERING.
6. ACCEPTABLE ABBREVIATIONS PER MUTCD MAY BE USED EXCEPT FOR THE STREET NAME ITSELF.
7. FOR G5521V SIGNS WHERE TWO STREET NAMES ARE REQUIRED, THE SIGN HEIGHT SHALL BE 32 INCHES WITH A 1 INCH DIVIDING THE LINE BETWEEN STREET NAMES.

The selection and use of this Standard Drawing, while designed in accordance with generally accepted engineering principles and practices, is the sole responsibility of the user.

BUREAU OF TRANSPORTATION
CITY OF PORTLAND, OREGON
Steve Tourtsem
Chief Engineer

Standard Drawing Title

STREET NAME SIGN DETAIL

Note:
All material and workmanship shall be in accordance with the City of Portland Standard Construction Specifications.

Effective Date: 08-15-11

Calc. Book No.:

Baseline Report Date:

Standard Drawing No.

P-420

Plot Date: 2/11/2013 6:14:06 AM Filename: S:_IL_Design\T00121- 50's Bikeway Woodstock Blvd-Thompson St, SE-NE\CAD\PLAN_SHEETS\SHT P-420 PORTLAND STANDARD DRAWING\PLOT_SHT_ P-420.dgn
Plot Date: 8/16/2011 7:05:54 AM Filename: U:\ustation\DGN\CITY OF PORTLAND - STANDARD DRAWINGS\SECTION DIVISIONS\3-STREETS\MICROSTATION\STD DRAWING NO P-420\PLOT_SHT_P-420.dgn

SCALE: 1" = 1'-0"

WB

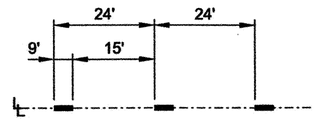

4" WHITE BROKEN LINE

YB

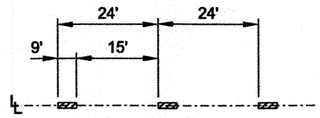

4" YELLOW BROKEN LINE

NPR

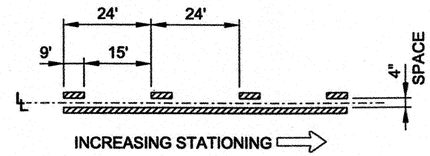

NO-PASS RIGHT 4" YELLOW LINES

NPL

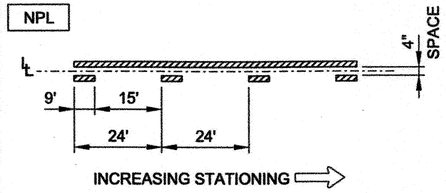

NO-PASS LEFT 4" YELLOW LINES

TWL

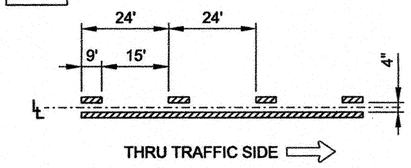

TWO-WAY LEFT TURN 4" YELLOW LINES

YB R-24

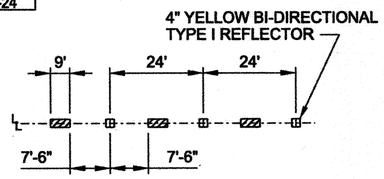

YELLOW BROKEN LINE SUPPLEMENTATION REFLECTORS WITH 4" YELLOW BROKEN LINE

YB R-48

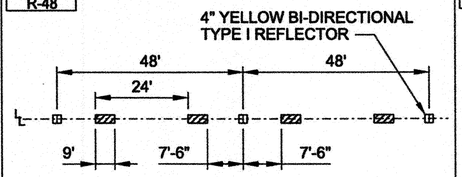

YELLOW BROKEN LINE SUPPLEMENTATION REFLECTORS WITH 4" YELLOW BROKEN LINE

WB R-24

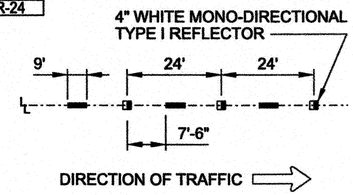

WHITE BROKEN LINE SUPPLEMENTATION REFLECTORS WITH 4" WHITE BROKEN LINE

NPL R-24

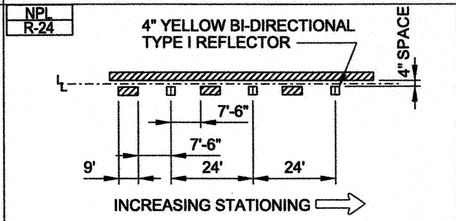

NO-PASS LEFT POSITIONING GUIDE REFLECTORS WITH 4" YELLOW LINES

NPR R-24

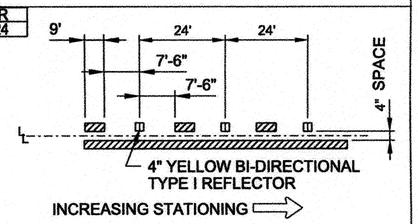

NO-PASS RIGHT POSITIONING GUIDE REFLECTORS WITH 4" YELLOW LINES

TWL R-24

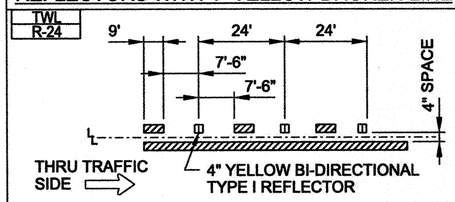

TWO WAY LEFT TURN POSITIONING GUIDE REFLECTORS WITH 4" YELLOW LINES

ISL R-2

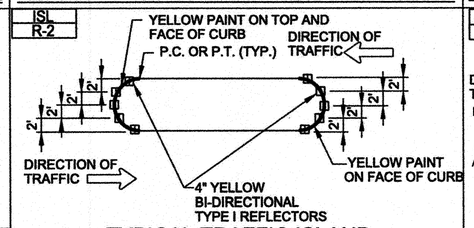

TYPICAL TRAFFIC ISLAND PAVEMENT MARKINGS

CE-CNR R-2

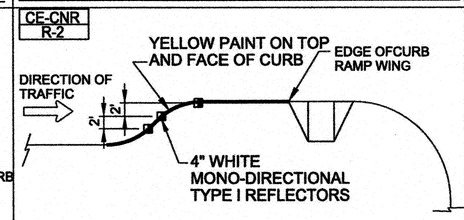

CURB EXTENSION DETAIL

TWL-ISL R-2

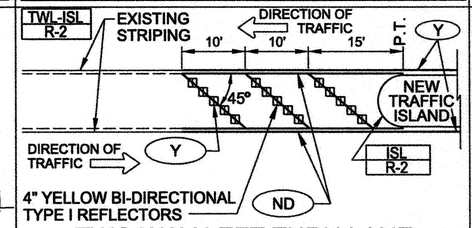

TWO WAY LEFT TURN LANE PAVEMENT MARKINGS AT ISLAND

CE-MB R-2

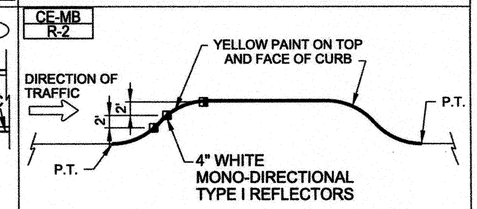

MIDBLOCK CURB EXTENSION PAVEMENT MARKINGS

CW-SC

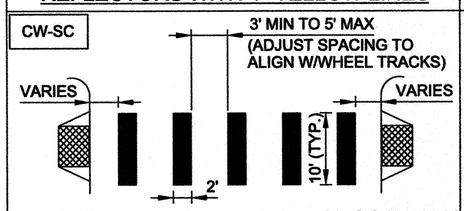

STAGGERED CONTINENTAL CROSSWALK 2' WHITE BARS

INSTALL PER STANDARD DRAWING TM530

BUMP

BUMP (WHITE)

CENTER MARKING WITHIN LANE WIDTH

FOR PROPORTION DETAILS, SEE CURRENT VERSION OF STANDARD HIGHWAY SIGNS

LEGEND

- DIRECTION OF TRAFFIC, INCREASING STATIONING OR THRU TRAFFIC SIDE.
- LANE LINE DIMENSIONS ARE SHOWN ON THE STRIPING PLANS.
- MONO-DIRECTIONAL CRYSTAL WHITE MARKER REFLECTS WHITE TO THE LEFT IN THIS SYMBOL
- BI-DIRECTIONAL YELLOW MARKER REFLECTS YELLOW BOTH LEFT AND RIGHT IN THIS SYMBOL
- XX PBOT REFERENCE MARKER
- XX ODOT REFERENCE MARKER

GENERAL NOTES:
1. SURFACE MOUNT RAISED PAVEMENT MARKERS (RPMS) UNLESS OTHERWISE SPECIFIED.
2. YELLOW PAINT IN CURB EXTENSION DETAILS MAY BE REPLACED BY NO PARKING SIGNS.

The selection and use of this Standard Drawing, while designed in accordance with generally accepted engineering principles and practices, is the sole responsibility of the user.

BUREAU OF TRANSPORTATION
CITY OF PORTLAND, OREGON

City Engineer

Standard Drawing Title

PAVEMENT MARKINGS STANDARD DETAIL BLOCKS

Note:
All material and workmanship shall be in accordance with the City of Portland Standard Construction Specifications.

Effective Date: 03-20-2013

Calc. Book No.:

Baseline Report Date:

Standard Drawing No.

P-434

Plot Date: 3/28/2013 10:19:42 AM Filename: S:_Il_Design\T00121-50's Bikeway Woodstock Blvd-Thompson St, SE-NE\CAD\PLAN_SHEETS\SHT P-434 PORTLAND STANDARD DRAWING\PLOT_SHT_ P-434.dgn
Plot Date: 3/19/2013 7:35:30 AM Filename: U:\ustation\DGN\CITY OF PORTLAND - STANDARD DRAWINGS\SECTION DIVISIONS\3-STREETS\MICROSTATION\STD DRAWING NO P-434\PLOT_SHT_P-434.dgn

BSR

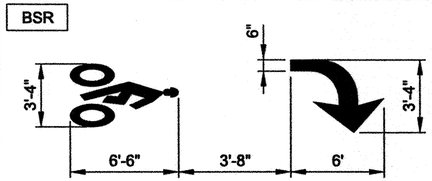

BIKE RIGHT TURN STENCIL (WHITE)

CENTER MARKING WITHIN LANE WIDTH

BSL

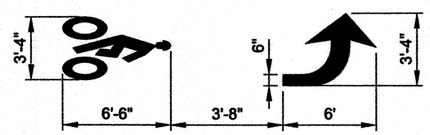

BIKE LEFT TURN STENCIL (WHITE)

CENTER MARKING WITHIN LANE WIDTH

BS

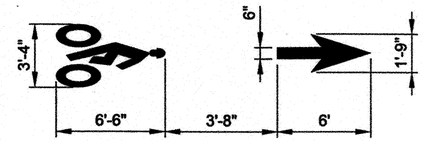

BIKE LANE STANDARD STENCIL (WHITE)

CENTER MARKING WITHIN LANE WIDTH

BSRS

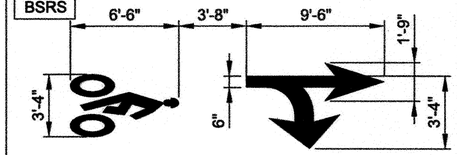

BIKE RIGHT TURN STRAIGHT ARROW STENCIL (WHITE)

CENTER MARKING WITHIN LANE WIDTH

BSLS

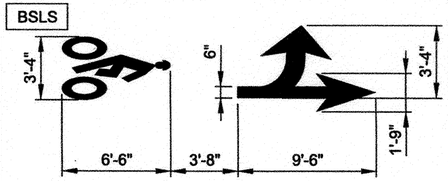

BIKE LEFT TURN STRAIGHT ARROW STENCIL (WHITE)

CENTER MARKING WITHIN LANE WIDTH

SHWL

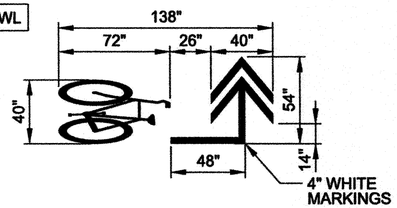

LEFT TURN SHARROW (WHITE)

GRN

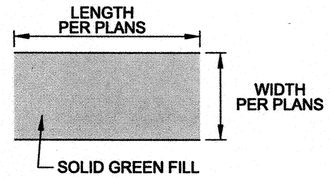

GREEN PAVEMENT MARKING

GREEN PAVEMENT MARKINGS SHALL BE "PANTONE" COLOR PALETTE #375

SHW

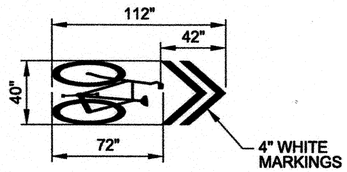

SHARROW (WHITE)

SHWR

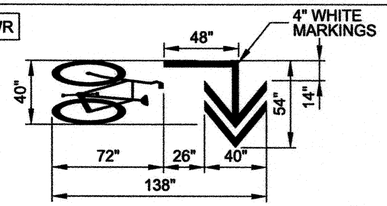

RIGHT TURN SHARROW (WHITE)

BL

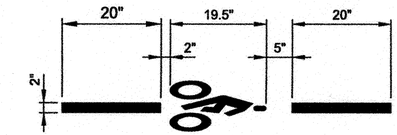

BIKE LOOP STENCIL (WHITE)

BSD

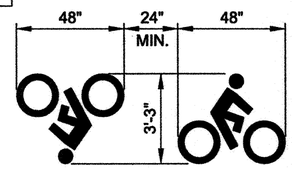

BIKE SYMBOL - DRIVEWAY (WHITE)

CENTER MARKING WITHIN CYCLE TRACK AND DRIVEWAY APRON

ON-LR

ONLY - LIGHT RAIL (WHITE)

CENTER MARKING WITHIN LANE WIDTH OR TRACK

LRT-LR

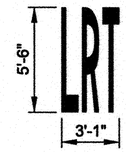

LRT - LIGHT RAIL (WHITE)

CENTER MARKING WITHIN LANE WIDTH OR TRACK

BUS-LR

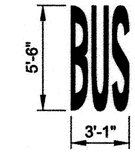

BUS - LIGHT RAIL (WHITE)

CENTER MARKING WITHIN LANE WIDTH OR TRACK

PED

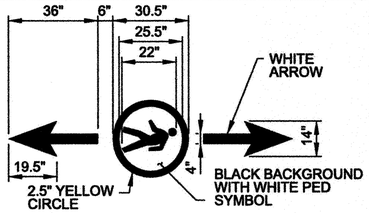

PEDESTRIAN OFF-STREET PATH MARKING

(COLOR AS NOTED ABOVE)

BIKE

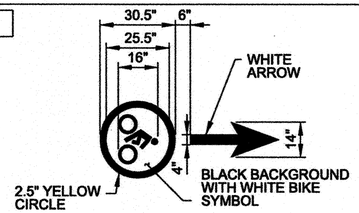

BIKE OFF-STREET PATH MARKING

(COLOR AS NOTED ABOVE)

GENERAL NOTES:
1. ARROW, LETTER AND BIKE SYMBOL DIMENSIONS ARE NOMINAL.
2. FOR PROPORTION DETAILS, SEE CURRENT VERSION OF STANDARD HIGHWAY SIGNS.

LEGEND:
XX PBOT REFERENCE MARKER
XX ODOT REFERENCE MARKER

The selection and use of this Standard Drawing, while designed in accordance with generally accepted engineering principles and practices, is the sole responsibility of the user.

Note:
All material and workmanship shall be in accordance with the City of Portland Standard Construction Specifications.

BUREAU OF TRANSPORTATION
CITY OF PORTLAND, OREGON

Steve Turner
City Engineer

Standard Drawing Title

PAVEMENT MARKINGS
STANDARD DETAIL BLOCKS

Effective Date: 03-20-2013
Calc. Book No.:
Baseline Report Date:

Standard Drawing No.
P-435

SCALE: 1" = 1'-0"
Plot Date: 3/18/2013 5:04:55 PM Filename: U:\ustation\DGN\CITY OF PORTLAND - STANDARD DRAWINGS\SECTION DIVISIONS\3-STREETS\MICROSTATION\STD DRAWING NO P-435\PLOT_SHT_P-435.dgn
Plot Date: 3/28/2013 10:23:15 AM Filename: S:_IL_Design\T00121- 50's Bikeway Woodstock Blvd-Thompson St, SE-NE\CAD\PLAN_SHEETS\SHT P-435 PORTLAND STANDARD DRAWING\PLOT_SHT_ P-435.dgn

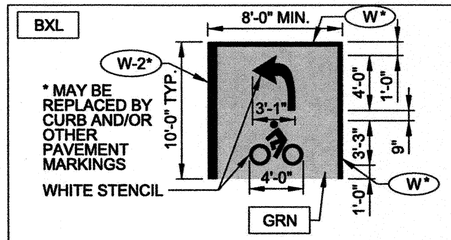

LEFT TURN BIKE BOX

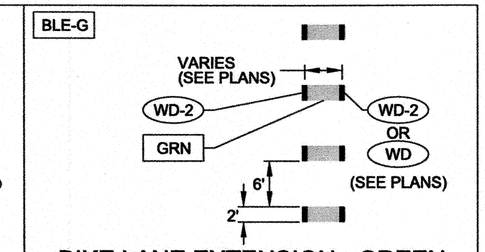

BIKE LANE EXTENSION - GREEN

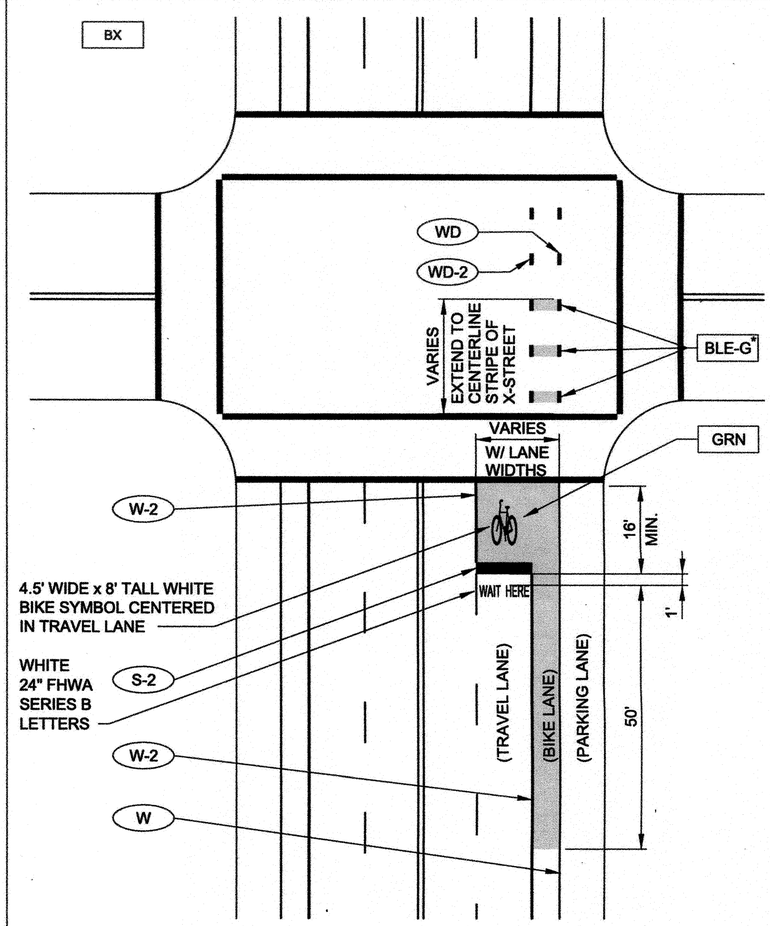

NOTES:
1. THIS PAVEMENT MARKING IS UNDER FHWA EXPERIMENTAL STATUS AND MAY BE USED ONLY AT FHWA APPROVED LOCATIONS.
2. IF THERE IS NO PARKING LANE CURB MAY SUBSTITUTE (W)

* ADJUST SPACING OF LINE SEGMENTS / BARS TO ALIGN WITH WHEEL TRACKS

GENERAL NOTES:
1. ARROW, LETTER AND BIKE SYMBOL DIMENSIONS ARE NOMINAL.
2. GREEN PAVEMENT MARKINGS ARE FROM "PANTONE" COLOR PALETE #375.
3. FOR PROPORTION DETAILS, SEE CURRENT VERSION OF STANDARD HIGHWAY SIGNS.

LEGEND:
[XX] PBOT REFERENCE MARKER
(XX) ODOT REFERENCE MARKER

The selection and use of this Standard Drawing, while designed in accordance with generally accepted engineering principles and practices, is the sole responsibility of the user.

BUREAU OF TRANSPORTATION
CITY OF PORTLAND, OREGON
City Engineer

Standard Drawing Title

PAVEMENT MARKINGS
STANDARD DETAIL BLOCKS

Note:
All material and workmanship shall be in accordance with the City of Portland Standard Construction Specifications.

Effective Date: 03-20-2013
Calc. Book No.:
Baseline Report Date:

Standard Drawing No.
P-436

Plot Date: 3/28/2013 10:26:31 AM Filename: S:_IL_Design\T0012I- 50's Bikeway Woodstock Blvd-Thompson St, SE-NE\CAD\PLAN_SHEETS\SHT P-436 PORTLAND STANDARD DRAWING\PLOT_SHT_ P-436.dgn
Plot Date: 3/19/2013 7:35:49 AM Filename: U:\vstation\DGN\CITY OF PORTLAND - STANDARD DRAWINGS\SECTION DIVISIONS\3-STREETS\MICROSTATION\STD DRAWING NO P-436\PLOT_SHT_P-436.dgn
SCALE: 1" = 1'-0"

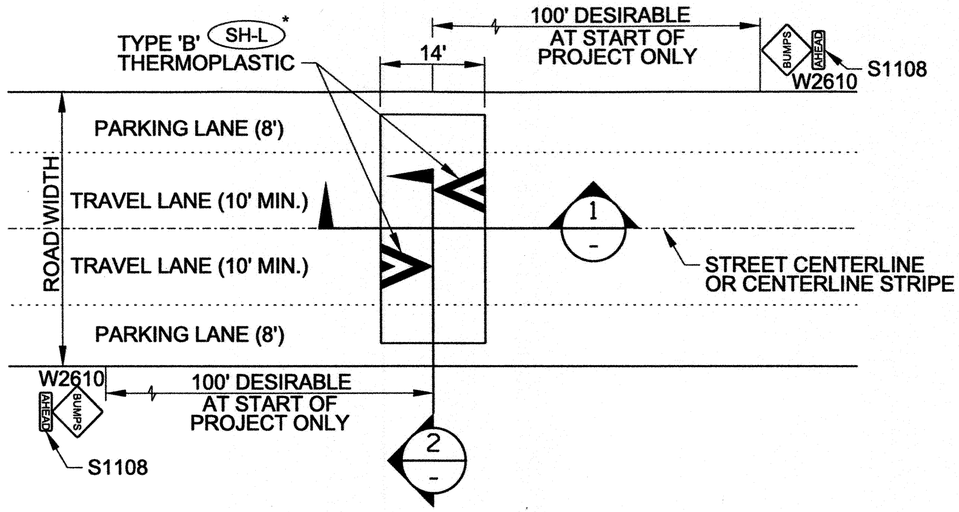

PLAN

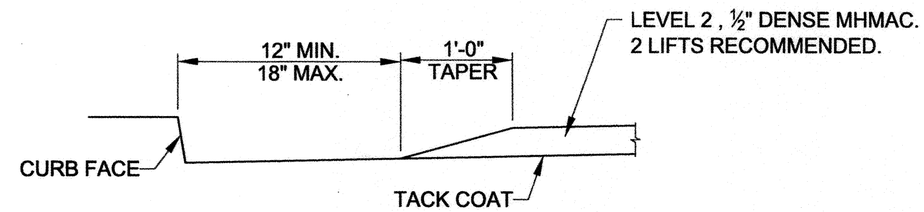

CURB DETAIL

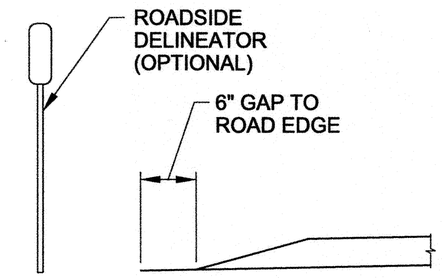

SHOULDER DETAIL FOR
STREETS WITHOUT CURBS

SECTION 2 -

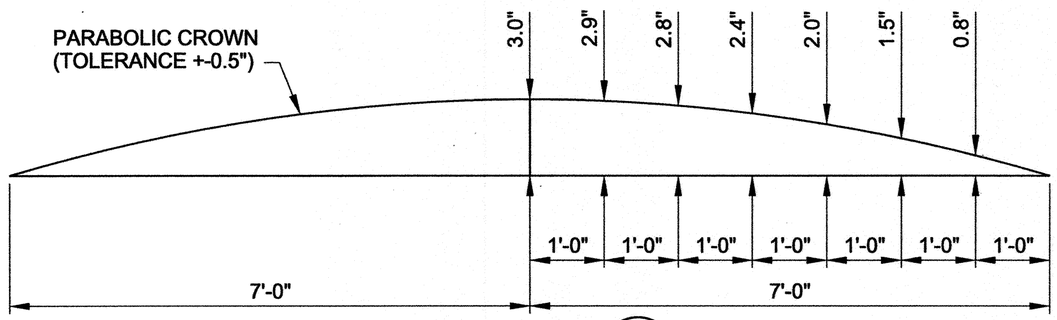

SECTION 1 -

NOTES:

1. PAVEMENT MARKINGS ON SPEED BUMP SHALL BE INSTALLED CONCURRENTLY WITH THE ASPHALT STRUCTURES. FOLLOW MANUFACTURER'S INLAY PROCEDURES FOR PAVEMENT MARKINGS ON SPEED BUMPS.
2. "BUMP" PAVEMENT MARKINGS AND SIGNS SHALL BE INSTALLED BEFORE OPENING ANY LANE TO TRAFFIC THAT IS OCCUPIED BY A NEW SPEED BUMP.
3. PAVEMENT MARKING LAYOUT ASSUMES A TWO-LANE, TWO-WAY STREET WITH PARKING ON BOTH SIDES. FOR ALL OTHER CONFIGURATIONS SUBMIT REVISED LAYOUT TO ENGINEER FOR APPROVAL.

* SEE ODOT DETAIL # 4560

LEGEND: XX — PBOT REFERENCE MARKER

XX — ODOT REFERENCE MARKER

The selection and use of this Standard Drawing, while designed in accordance with generally accepted engineering principles and practices, is the sole responsibility of the user.

BUREAU OF TRANSPORTATION
CITY OF PORTLAND, OREGON

Steve Town
City Engineer

Standard Drawing Title

14' ASPHALT LOCAL SPEED BUMP

Note:
All material and workmanship shall be in accordance with the City of Portland Standard Construction Specifications.

Effective Date: 03-20-2013

Calc. Book No.: Calc_Book_No.

Baseline Report Date: Date

Standard Drawing No.

P-440

Plot Date: 3/28/2013 10:29:07 AM Filename: S:_II_Design\T0021- 50's Bikeway Woodstock Blvd-Thompson St, SE-NE\CAD\PLAN_SHEETS\SHT P-440 PORTLAND STANDARD DRAWING\PLOT_SHT_ P-440.dgn
Plot Date: 3/19/2013 7:36:08 AM Filename: U:\ustation\DGN\CITY OF PORTLAND - STANDARD DRAWINGS\SECTION DIVISIONS\3-STREETS\MICROSTATION\STD DRAWING NO P-440\PLOT_SHT_P-440.dgn
SCALE: ⅛" = 1'-0"

Bid Documents

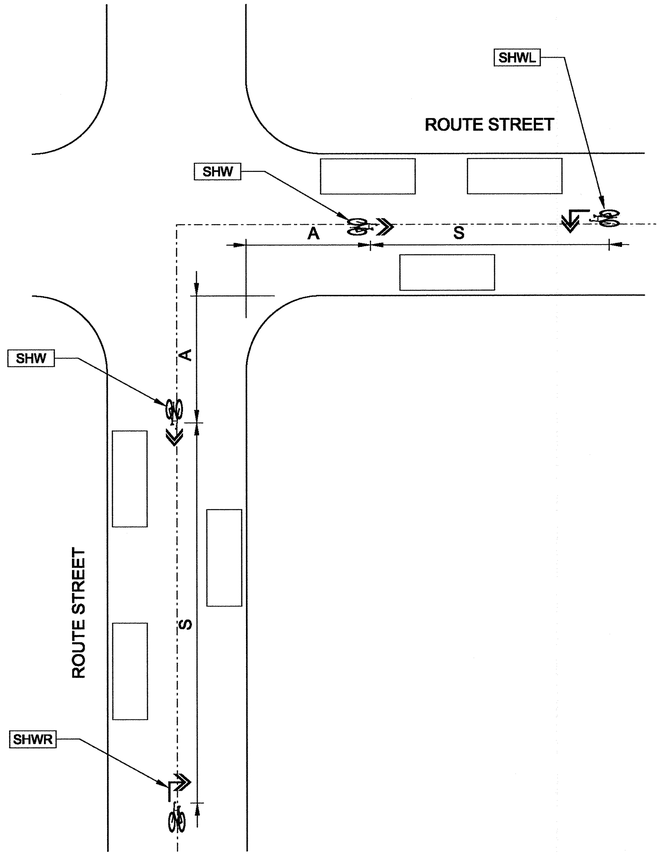

BEND IN ROUTE LAYOUT

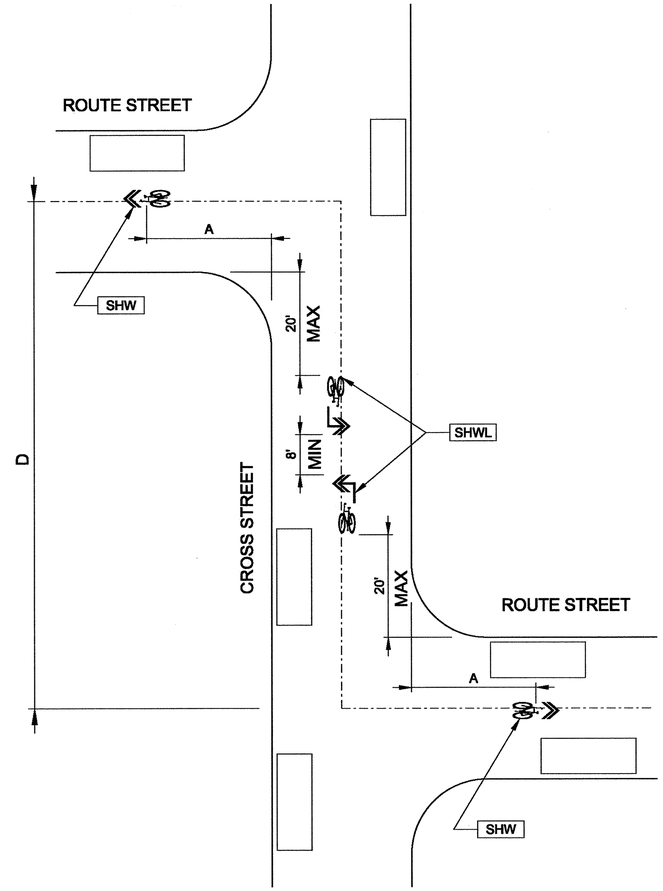

JOG IN ROUTE LAYOUT

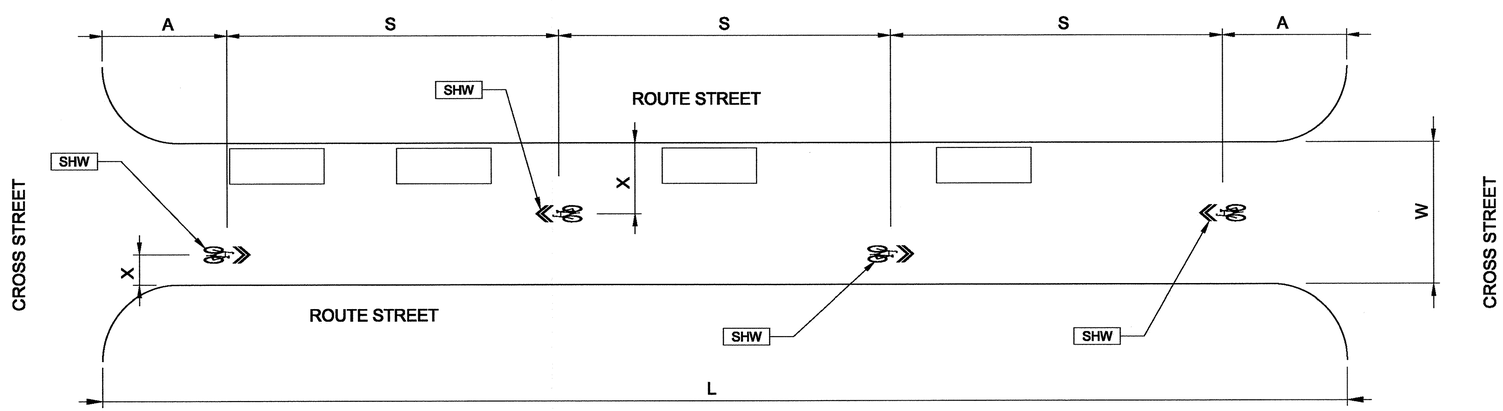

GENERAL LAYOUT

CURB OFFSETS TABLE

STREET WIDTH (W)	CURB OFFSET (X)		
	ON-STREET PARKING		NO PARKING
	BOTH SIDES	ONE SIDE	
18'		12.0' / 4.0'	5.5'
20'		13.0' / 5.0'	6.0'
22'		14.0' / 6.0'	6.5'
24'	11.5'	15.0' / 7.0'	
26'	12.5'	13.5' / 5.5'	
28'	13.5'	14.0' / 6.0'	
30'	14.5'		
32'	13.0'		
34'	13.5'		
36'	14.0'		

LEGEND

- CURB
- ROUTE CENTERLINE
- PARKED CAR
- XXX — PBOT REFERENCE MARKER

NUMBER AND SPACING TABLE

BLOCK/SEGMENT LENGTH (L)	NUMBER OF SHARROWS (N)
0' - 450'	2
451' - 700'	4
701' - 950'	6
951' - 1300'	8
1301' - 1650'	10
1651' - 2000'	12
2001' - 2350'	14
SPACING (S)	S=(L-50)/(N-1)

GENERAL NOTES:

1. OFFSETS "X" ARE MEASURED FROM FACE OF CURB TO CENTERLINE OF SHARROW.
2. SPACINGS "S" ARE MEASURED FROM CENTER OF SHARROW TO CENTER OF SHARROW.
3. "N" REPRESENTS THE TOTAL NUMBER OF SHARROWS NEEDED FOR THE SEGMENT.
4. ADJUST SPACINGS AS NECESSARY TO AVOID SHARROW PLACEMENT WITHIN INTERSECTIONS OR IN FRONT OF DRIVEWAYS.
5. "A" SHALL BE LARGE ENOUGH SO THAT THE ENTIRE FIRST SHARROW LIES BEYOND THE SIDEWALK CORIDOR OF THE CROSS STREET.
   TYPICAL "A" = 25'
   MAXIMUM "A" = 50'
6. WHEN "D"<75': IF SHARROWS ON ROUTE STREET ARE VISIBLE FROM THE OPPOSING LEGS, THEN OMIT SHARROWS ON CROSS STREET.
7. WHEN "D">450': USE "BEND IN ROUTE" DETAIL.
8. UNIQUE CROSSING TREATMENT IS REQUIRED FOR CROSS STREETS WITH A CLASSIFICATION OF "NEIGHBORHOOD COLLECTOR" OR HIGHER AND/OR AN ADT>3,000VPD.

The selection and use of this Standard Drawing, while designed in accordance with generally accepted engineering principles and practices, is the sole responsibility of the user.

BUREAU OF TRANSPORTATION
CITY OF PORTLAND, OREGON
Steve Iwamoto
Chief Engineer

Standard Drawing Title

SHARED LANE PAVEMENT MARKINGS - LOCAL SERVICE STREETS

Note:
All material and workmanship shall be in accordance with the City of Portland Standard Construction Specifications.

Effective Date: 01-11-12

Calc. Book No.:

Baseline Report Date:

Standard Drawing No.

P-450

Plot Date: 2/11/2013 6:18:39 AM Filename: S:_II_Design\T00121 - 50's Bikeway Woodstock Blvd-Thompson St, SE-NE\CAD\PLAN_SHEETS\SHT P-450 PORTLAND STANDARD DRAWING\PLOT_SHT_ P-450.dgn
Plot Date: 1/12/2012 11:23:13 AM Filename: U:\ustation\DGN\CITY OF PORTLAND - STANDARD DRAWINGS\SECTION DIVISIONS\3-STREETS\MICROSTATION\STD DRAWING NO P-450\PLOT_SHT_P-450.dgn

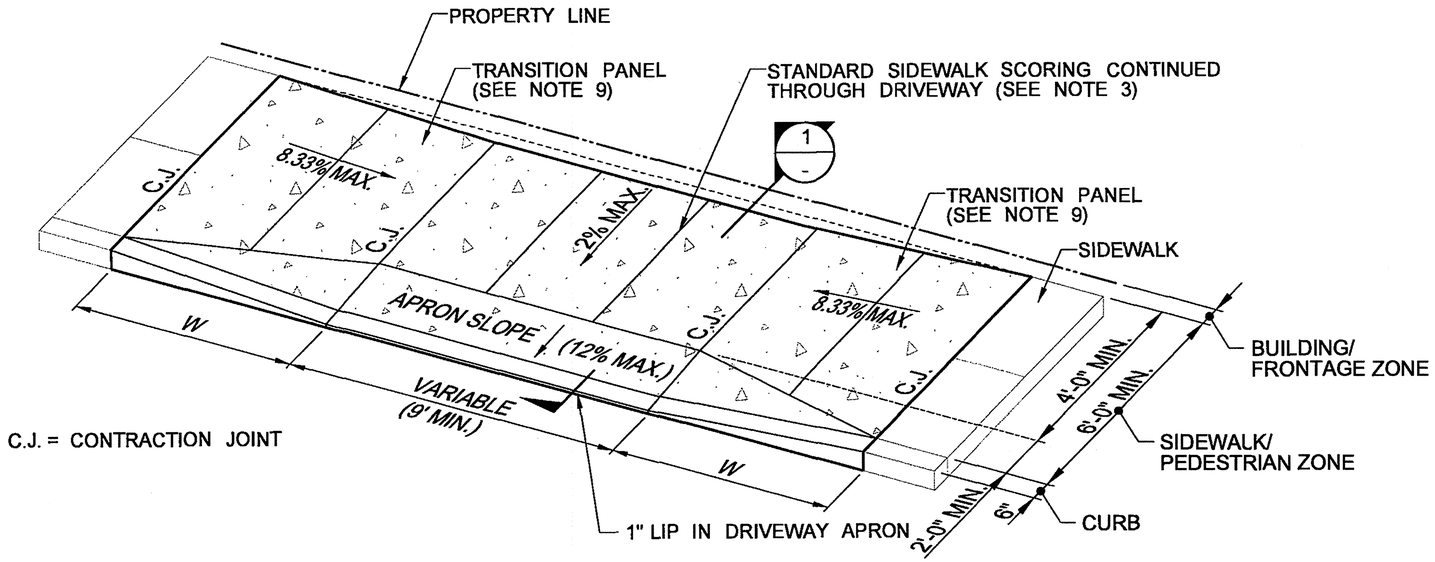

DRIVEWAY CLASSIFICATION	WIDTH OF WINGS = W **	MAXIMUM RECOMMENDED ALGEBRAIC GRADE CHANGE AT STREET = G*	DRIVEWAY THICKNESS
RESIDENTIAL	6' MIN.	14%	6"
COMMERCIAL	10'	12%	6"
INDUSTRIAL	12'	10%	8"

*EVALUATE STREET CLASSIFICATION AND USE FOR APPROPRIATE GRADES.
**WIDTH OF WINGS MAY BE MODIFIED TO MATCH ADJACENT SIDEWALK SCORING.

S = SLOPE
G = ALGEBRAIC GRADE CHANGE AT STREET (SEE ALSO TABLE)

EXAMPLE CALC: G = 12% - (-2%) = 14%
G = (APRON SLOPE) - (-STREET CROSS SLOPE)

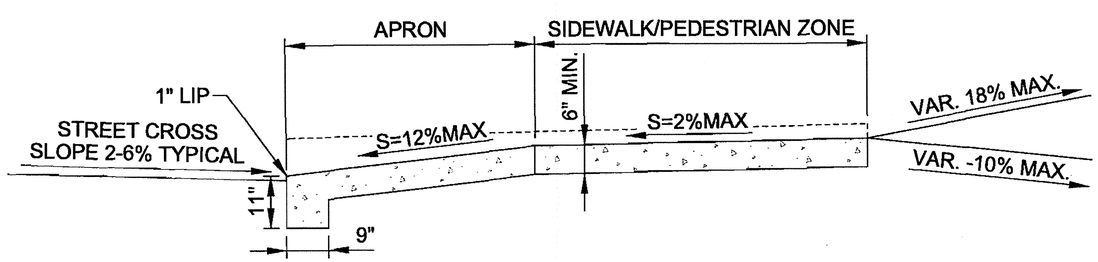

SECTION 1 -

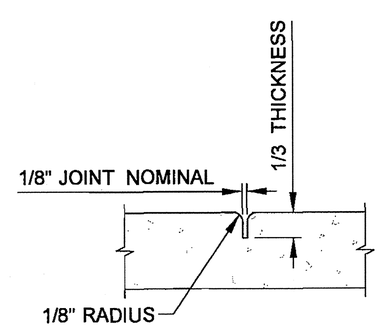

CONTRACTION JOINT DETAIL

NOTES:

1. MINIMUM 4' UNOBSTRUCTED CLEAR SIDEWALK/PEDESTRIAN ZONE WITH MAXIMUM SLOPE OF 2% IS REQUIRED THROUGH DRIVEWAYS. ANY WIDTH LESS THAN 4' REQUIRES A DESIGN EXCEPTION APPROVED BY CITY ENGINEER.
2. WHERE DRIVEWAY CONNECTION TO PROPERTY IS A NEGATIVE GRADE, THE GUTTER FLOW DEPTH MEASURED FROM GUTTER LINE TO BACK OF SIDEWALK ELEVATION SHALL HAVE A MINIMUM OF 3" VERTICAL RISE TO ASSURE THAT STORMWATER WILL NOT OVERTOP THE BACK OF SIDEWALK. IF THIS CONDITION CANNOT BE MET, PLACE AN INLET AT UPSTREAM SIDE OF DRIVEWAY OR OTHER APPROVED DESIGN MITIGATION.
3. STANDARD SIDEWALK SCORING SHALL CONTINUE THROUGH DRIVEWAY TO DELINEATE SIDEWALK/PEDESTRIAN ZONE. PRE-APPROVED SIDEWALK SCORING WITH CITY STREET INSPECTOR PRIOR TO POURING DRIVEWAY.
4. A MINIMUM OF 3' DRIVEWAY CONNECTION SHALL BE PAVED BEHIND THE SIDEWALK TO PREVENT TRACKING OF GRAVEL OR DIRT ONTO THE SIDEWALK PER DRG. NO. P-536.
5. PAY LIMIT FOR DRIVEWAYS IS THE OUTER LIMIT OF THICKER STRUCTURAL SECTION THAT IS SUBJECT TO VEHICLE LOADS.
6. DRIVEWAYS SHALL BE POURED MONOLITHIC WITH CURB.
7. IF APPROVED, WHERE EXISTING DRIVEWAY IS IN GOOD CONDITION AND MEETS SLOPE REQUIREMENTS, MAY CONSTRUCT ONLY AS REQUIRED FOR SATISFACTORY CONNECTION WITH NEW WORK.
8. DRIVEWAY APRON SLOPE SHALL BE MAXIMIZED WHILE STILL ALLOWING THE DRIVEWAY TO FUNCTION PROPERLY BEFORE DEPRESSING THE SIDEWALK/PEDESTRIAN ZONE.
9. THE WIDTH OF DRIVEWAY WINGS MAY BE INCREASED INDEPENDENT OF THE WIDTHS SPECIFIED PER DRIVEWAY CLASSIFICATION TO MEET THE TRANSITION PANEL SLOPE REQUIREMENTS AS NECESSARY (15' MAXIMUM).
10. WHEN COMBINATION CURB AND GUTTER IS USED THE GUTTER PAN SHALL BE INCLUDED IN THE PAY LIMITS FOR THE DRIVEWAY.

The selection and use of this Standard Drawing, while designed in accordance with generally accepted engineering principles and practices, is the sole responsibility of the user.

BUREAU OF TRANSPORTATION
CITY OF PORTLAND, OREGON
Steve Town
Chief Engineer

Standard Drawing Title

CURB TIGHT SIDEWALK PARTIALLY LOWERED DRIVEWAY

Note:
All material and workmanship shall be in accordance with the City of Portland Standard Construction Specifications.

Effective Date: 04-15-10
Calc. Book No.:
Baseline Report Date:

Standard Drawing No.
P-532

Plot Date: 2/11/2013 6:19:33 AM Filename: S:_Il_Design\T00121 - 50's Bikeway Woodstock Blvd-Thompson St, SE-NE\CAD\PLAN_SHEETS\SHT P-532 PORTLAND STANDARD DRAWING\PLOT_SHT_ P-532.dgn
Plot Date: 4/21/2010 2:49:59 PM Filename: U:\ustation\DGN\CITY OF PORTLAND - STANDARD DRAWINGS\SECTION DIVISIONS\3-STREETS\MICROSTATION\STD DRAWING NO P-532 CURB TIGHT SIDEWALK PARTIALLY LOWERED DRIVEWAY\PLOTSHEET\P-532.dgn

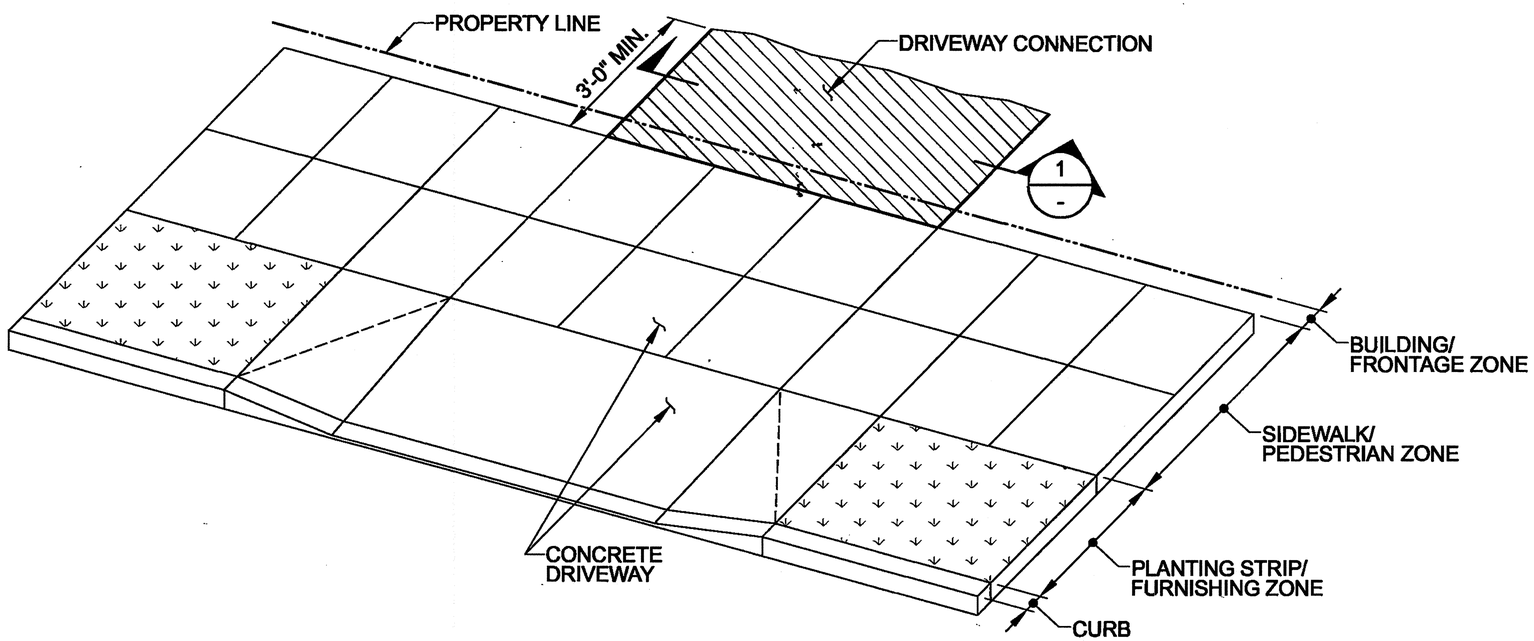

NOTES:

1. ALL DRIVEWAYS ARE REQUIRED TO HAVE A MINIMUM 3' PAVED DRIVEWAY CONNECTION BEHIND THE CONCRETE DRIVEWAY, TO PREVENT TRACKING OF DIRT AND/OR AGGREGATE ONTO SIDEWALK
2. CONSTRUCT THE DRIVEWAY CONNECTION ACCORDING TO SECTION 1.

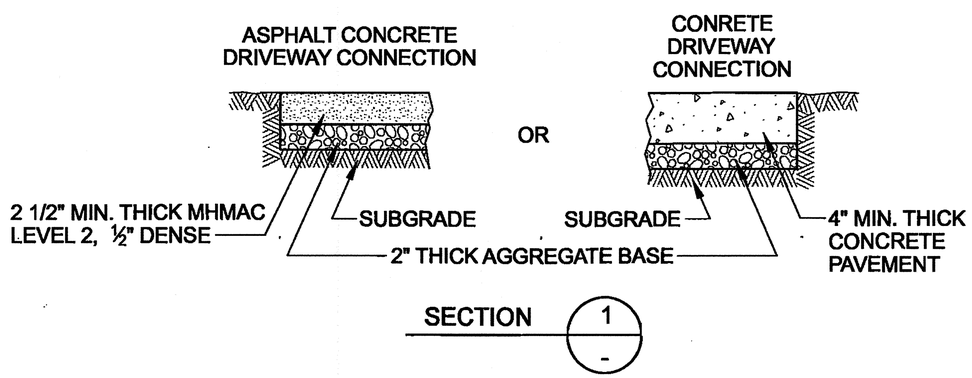

SECTION 1 / -

The selection and use of this Standard Drawing, while designed in accordance with generally accepted engineering principles and practices, is the sole responsibility of the user.

BUREAU OF TRANSPORTATION
CITY OF PORTLAND, OREGON

Chief Engineer

Standard Drawing Title

DRIVEWAY CONNECTION DETAIL

Note:
All material and workmanship shall be in accordance with the City of Portland Standard Construction Specifications.

Effective Date: 01-26-10

Calc. Book No.:

Baseline Report Date:

Standard Drawing No.

P-536

Plot Date: 2/11/2013 6:20:19 AM Filename: S:_II_Design\T00121 - 50's Bikeway Woodstock Blvd-Thompson St, SE-NE\CAD\PLAN_SHEETS\SHT P-536 PORTLAND STANDARD DRAWING\PLOT_SHT_ P-536.dgn
Plot Date: 1/28/2010 8:38:48 AM Filename: U:\vstation\DGN\CITY OF PORTLAND - STANDARD DRAWINGS\SECTION DIVISIONS\3-STREETS\MICROSTATION\STD DRAWING NO P-536\PLOT_SHT_P-536.dgn
SCALE: 1" = 1'-0"

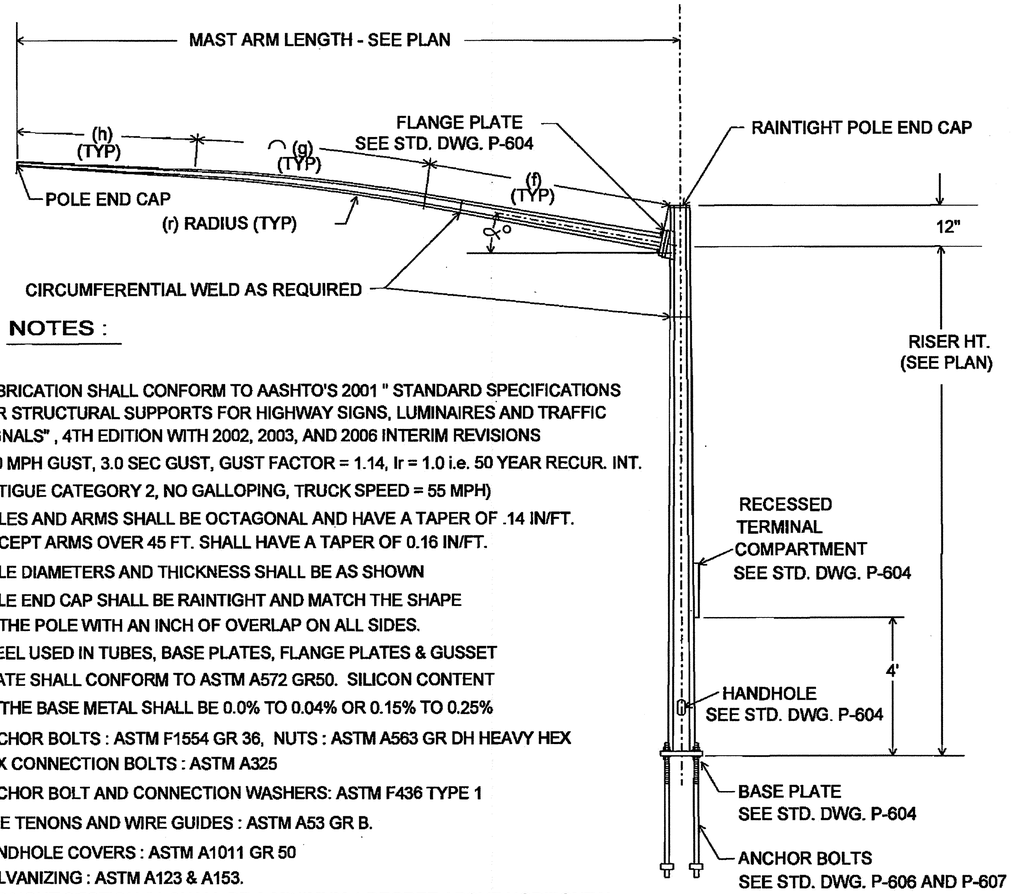

NOTES :

1- FABRICATION SHALL CONFORM TO AASHTO'S 2001 " STANDARD SPECIFICATIONS FOR STRUCTURAL SUPPORTS FOR HIGHWAY SIGNS, LUMINAIRES AND TRAFFIC SIGNALS" , 4TH EDITION WITH 2002, 2003, AND 2006 INTERIM REVISIONS
100 MPH GUST, 3.0 SEC GUST, GUST FACTOR = 1.14, Ir = 1.0 i.e. 50 YEAR RECUR. INT.
FATIGUE CATEGORY 2, NO GALLOPING, TRUCK SPEED = 55 MPH)

2- POLES AND ARMS SHALL BE OCTAGONAL AND HAVE A TAPER OF .14 IN/FT. EXCEPT ARMS OVER 45 FT. SHALL HAVE A TAPER OF 0.16 IN/FT.

3- POLE DIAMETERS AND THICKNESS SHALL BE AS SHOWN

4- POLE END CAP SHALL BE RAINTIGHT AND MATCH THE SHAPE OF THE POLE WITH AN INCH OF OVERLAP ON ALL SIDES.

5- STEEL USED IN TUBES, BASE PLATES, FLANGE PLATES & GUSSET PLATE SHALL CONFORM TO ASTM A572 GR50. SILICON CONTENT OF THE BASE METAL SHALL BE 0.0% TO 0.04% OR 0.15% TO 0.25%

6- ANCHOR BOLTS : ASTM F1554 GR 36, NUTS : ASTM A563 GR DH HEAVY HEX

7- HEX CONNECTION BOLTS : ASTM A325

8- ANCHOR BOLT AND CONNECTION WASHERS: ASTM F436 TYPE 1

9- PIPE TENONS AND WIRE GUIDES : ASTM A53 GR B.

10- HANDHOLE COVERS : ASTM A1011 GR 50

11- GALVANIZING : ASTM A123 & A153.

12- STRAIGHT SECTION (h) SHALL BE A MINIMUM 1 DEGREE ABOVE HORIZONTAL WHEN FULLY LOADED AND A MAXIMUM OF 4 DEGREES ABOVE HORIZONTAL WHEN UNLOADED

SINGLE MAST ARM POLE

POLE DATA								
NOMINAL POLE TYPE	SPECIFIC POLE TYPE	POLE BASE DIA. (INCH)	POLE THICKNESS (INCH)	ARM BASE DIA. (INCH)	ARM THICKNESS (INCH)	MAX ALLOWABLE RISER (FT)	MAST ARM RANGE (FT)	BASE PLATE TYPE
1	MAP-20	11.0	.25	7.5	.25	25.5	5'-20'	200
1	MAP-25	11.5	.313	8	.313	24.5	20.5'-25'	200
1	MAP-30	12.0	.313	9	.313	24	25.5'-30'	200
1	MAP-35	12.5	.375	9.5	.313	23.5	30.5'-35'	200
1	MAP-40L(1)	12.5	.375	10	.313	22	35.5'-40'	200
2	MAP-40H(1)	14.0	.313	11.5	.313	23.5	35.5'-40'	201 A
2	MAP-45	14.0	.375	11.5	.375	20	40.5'-45'	201 A
3	MAP-50	16.0	.313	12	.375	20	45.5'-50'	201 B
3	MAP-55	16.0	.375	13	.375	20	50.5'-55'	201 B

MAST ARM DATA						FLANGE CONNECTION DATA				
POLE TYPE	∝ ANGLE	(f) ANGLE ST. (FT)	(r) RADIUS (FT)	(g) CURVE (FT)	(h) STRAIGHT (FT)	(i) PLATE SQ. (IN)	(j) ARM PL TK (IN)	(k) POLE PL TK (IN)	(m) BOLT CIRCLE (IN)	(n) BOLT SIZE (INxIN)
MAP-20	13	5.1	56	9.8	0.9-5.4	12	1.25	1.25	12	1.25 x 3.5
MAP-25	13	7.6	74	12.9	0.3-4.8	13	1.50	1.25	13	1.25 x 3.5
MAP-30	13	9.2	80	14.0	2.7-7.2	13	1.50	1.25	13	1.25 x 3.5
MAP-35	13	7.1	120	20.9	2.9-7.4	15	1.75	1.25	15	1.25 x 3.5
MAP-40L(1)	10	13.8	135	16.5	5.5-10.0	15	1.75	1.25	15	1.25 x 3.5
MAP-40H(1)	10	13.8	135	16.5	5.5-10.0	16	2.00	1.50	16	1.50 x 4.0
MAP-45	10	16.9	150	18.3	5.7-10.2	16	2.00	1.50	16	1.50 x 4.0
MAP-50(2)	10	18.1	165	20.2	7.7-12.2	17	2.00	1.50	17	1.50 x 4.0
MAP-55(2)	10	19.9	165	22.6	8.5-13.0	17	2.25	1.75	17	1.75 x 4.5

NOTES:
(1) LIGHTLY LOADED MAST ARMS: 4 SIGNS OR SIGNALS MAX.
(2) ARM TAPER SHALL BE .16 INCHES / FT TO LIMIT VIBRATION

SINGLE MAST ARM TABLE OF VARIABLES

NOT TO SCALE

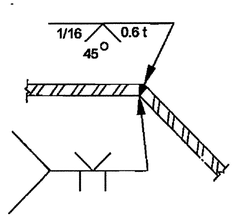

NOTE:
BACK GOUGE OUTSIDE WITHIN 6" OF TUBE ENDS OR CIRCUMFRENTIAL WELDS TO OBTAIN 100% PENETRATION (B-U4b)

LONGITUDINAL WELD DETAIL

TWO PER TUBE AT 180 DEG.

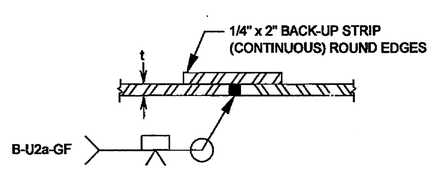

CIRCUMFERENTIAL WELD DETAIL

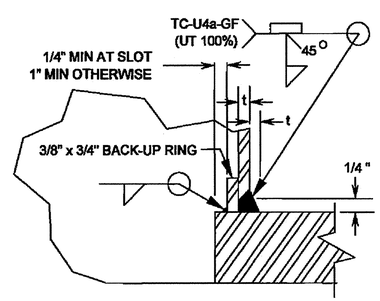

BASE WELD DETAIL

MAST ARM POLE WELD DETAILS

The selection and use of this Standard Drawing, while designed in accordance with generally accepted engineering principles and practices, is the sole responsibility of the user.

BUREAU OF TRANSPORTATION
CITY OF PORTLAND, OREGON
Chief Engineer

Standard Drawing Title

SINGLE MAST ARM POLE & WELD DETAILS

Note:
All material and workmanship shall be in accordance with the City of Portland Standard Construction Specifications.

Effective Date: 09/09/09
Calc. Book No.: N/A
Baseline Report Date: N/A

Standard Drawing No.
P-601

Plot Date: 1/13/2011 12:47:17 PM Filename: \\pdxnt\version\DETAILS\Standard Details\Traffic Signal Details\P-601 Single Mast Arm Pole.dgn
Plot Date: 2/11/2013 6:22:08 AM Filename: S:_Design\T00121 - 50's Bikeway Woodstock Blvd-Thompson St, SE-NE\CAD\PLAN_SHEETS\SHT P-601\PORTLAND STANDARD DRAWING\PLOT_SHT_ P-601.dgn
11x17 PRINT SCALE: $SCALE$

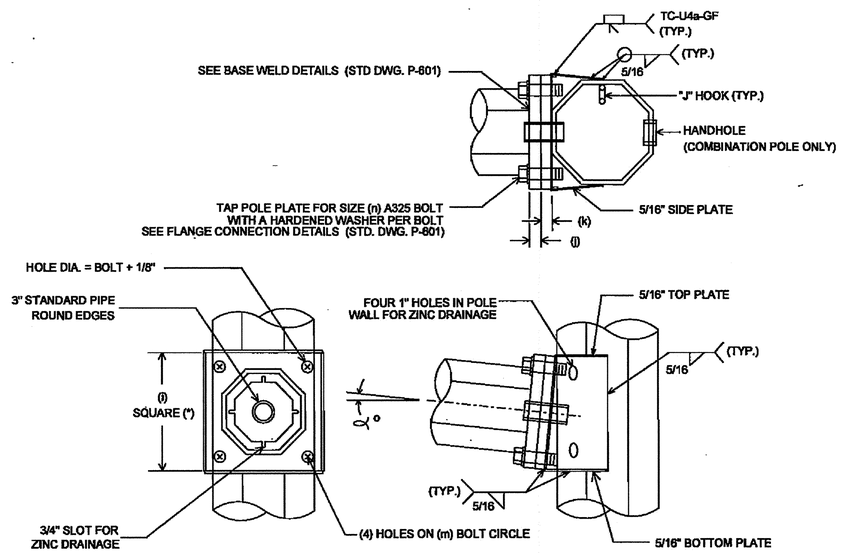

(*) = SEE MAST ARM TABLE OF VARIABLES (STD. DWG. P-601 or P-602)

FLANGE PLATE DETAIL FOR ARMS 40' AND UNDER

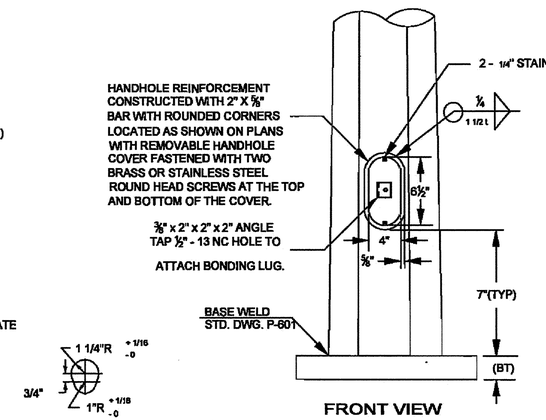

FRONT VIEW

HOLE DETAIL
TYPE 200 BASE PLATE

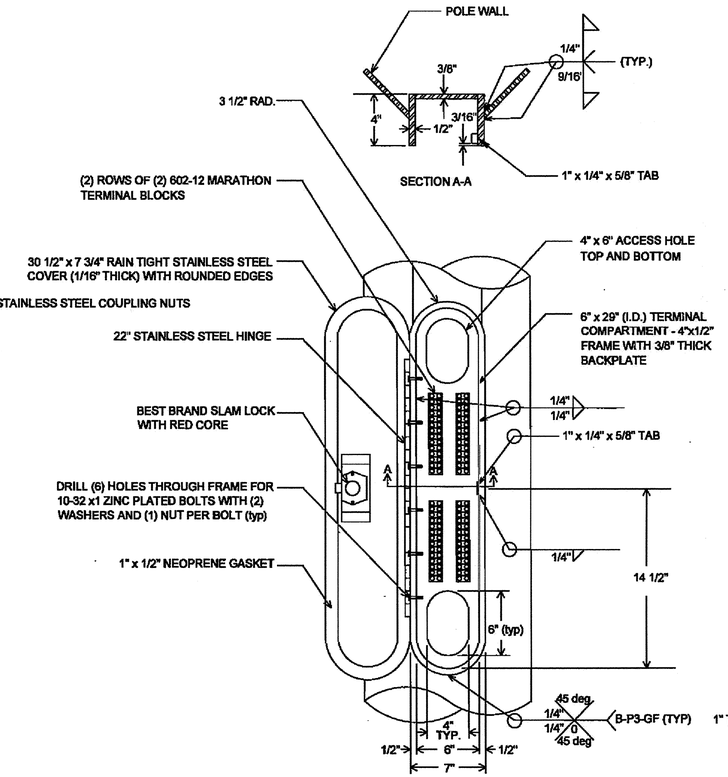

FRONT VIEW - COVER OPEN

SIDE VIEW

RECESSED TERMINAL CABINET

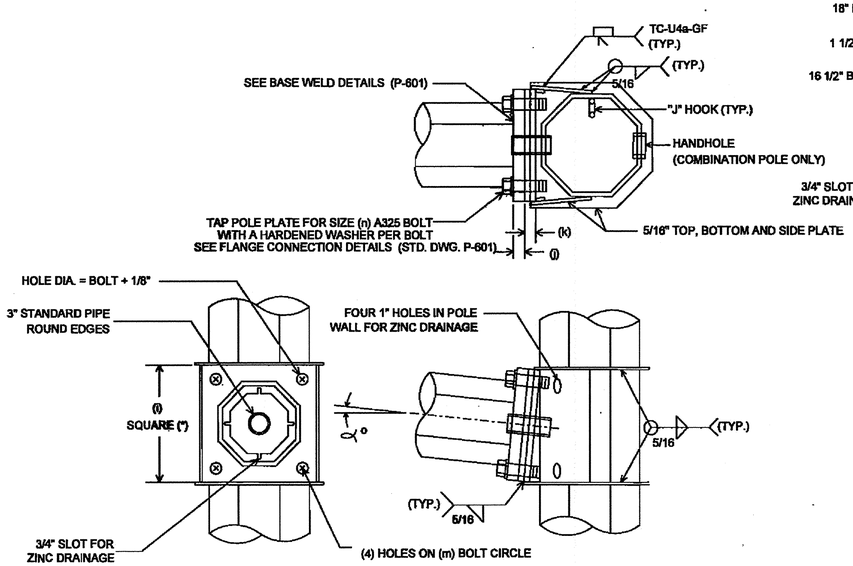

(*) = SEE MAST ARM TABLE OF VARIABLES (STD. DWG. P-601 OR P-602)

FLANGE PLATE DETAIL FOR ARMS GREATER THAN 40'

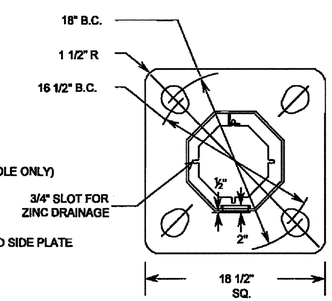

TOP VIEW
TYPE 200 BASE PLATE

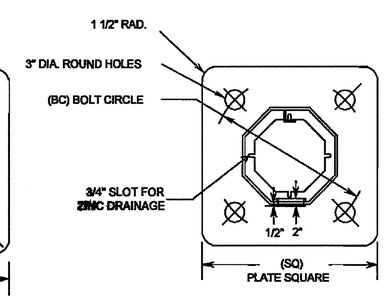

TOP VIEW
TYPE 201A & 201B
BASE PLATE

POLE TYPE	BASE PLATE TYPE	(SQ)	(BC)	(BT)
TYPE 1	200	18.5"	18.0"	2.0"
TYPE 2	201 A	21.5"	20.0"	2.5"
TYPE 3	201 B	22.5"	22.5"	2.5"

BASE PLATE DETAILS

NOT TO SCALE

The selection and use of this Standard Drawing, while designed in accordance with generally accepted engineering principles and practices, is the sole responsibility of the user.

BUREAU OF TRANSPORTATION
CITY OF PORTLAND, OREGON
Steve Thomson
Chief Engineer

Standard Drawing Title

MAST ARM POLE
TERMINAL CABINET, FLANGE
& BASE PLATE DETAILS

Note:
All material and workmanship shall be in accordance with the City of Portland Standard Construction Specifications.

Effective Date: 09/09/09

Calc. Book No.: N/A

Baseline Report Date: N/A

Standard Drawing No.
P-604

Plot Date: 1/13/2011 12:44:10 PM Filename: \\pdxtrfuatsfcn\DETAILS\Standard Details\Traffic Signal Details\P-604 Mast Arm Pole Plate Details.dgn
Plot Date: 2/11/2013 6:22:57 AM Filename: S:_IL_Design\T0121 - 50's Bikeway Woodstock Blvd-Thompson St, SE-NE\CAD\PLAN_SHEETS\SHT P-604 PORTLAND STANDARD DRAWING\PLOT_SHT_ P-604.dgn
11x17 PRINT SCALE: $SCALE$

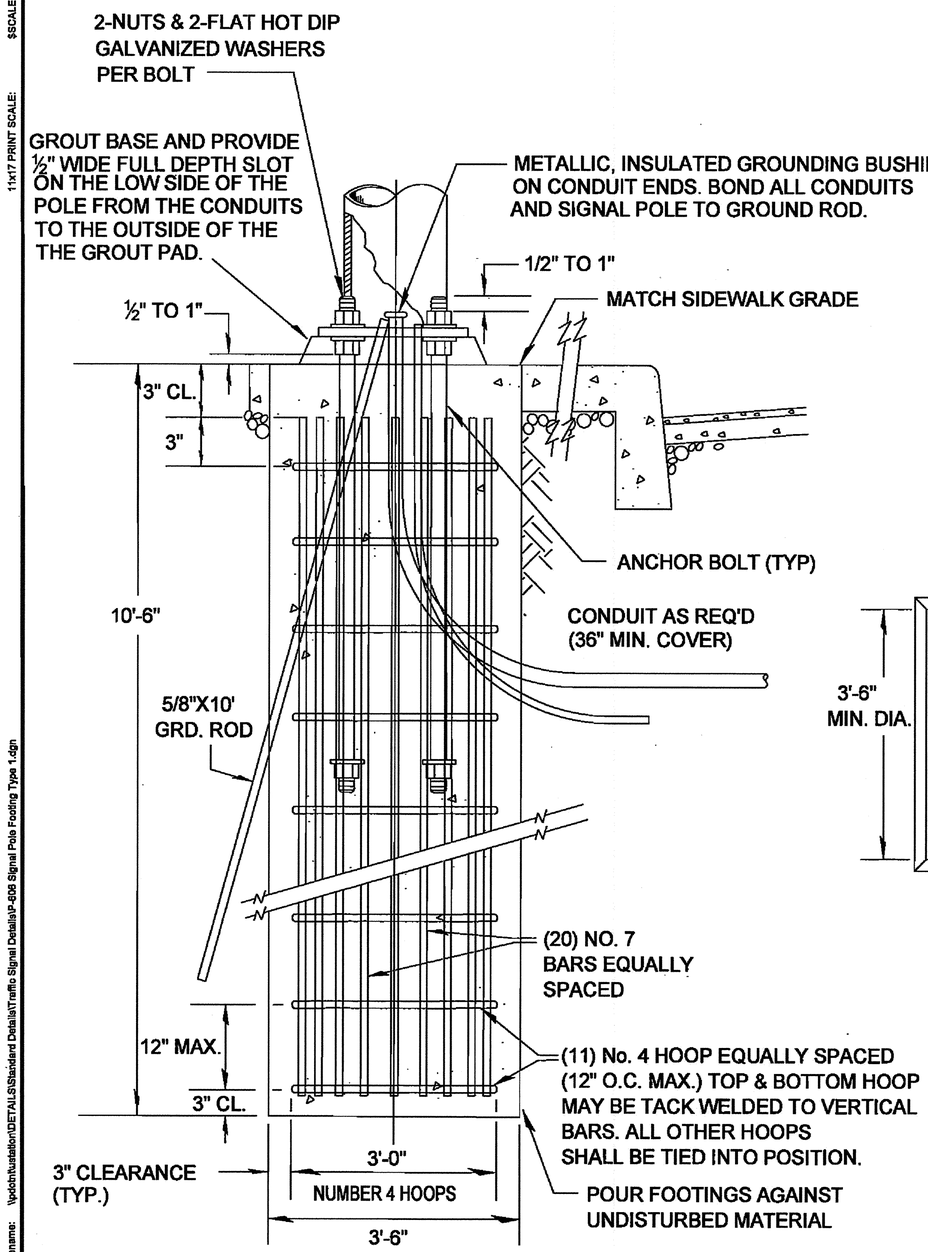

STEEL SIGNAL POLE FOOTING DETAILS - TYPE 1

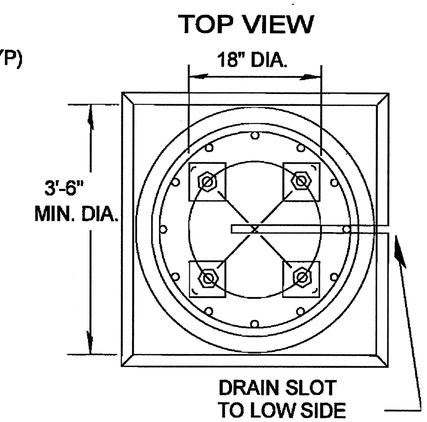

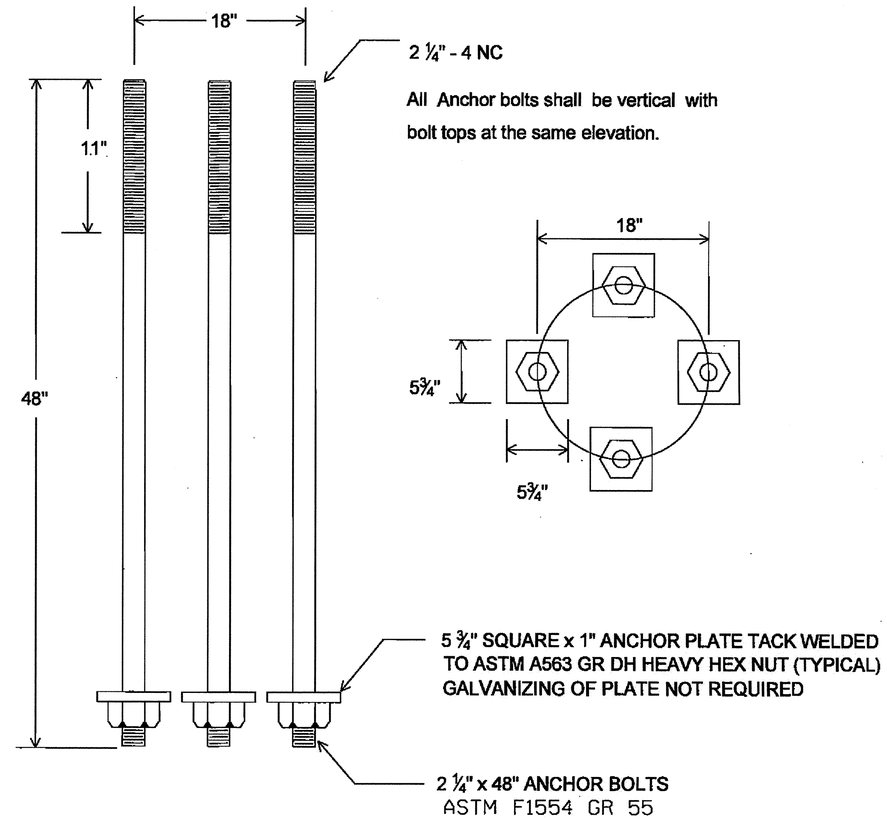

NOTE : Hot dip Galvanized Nuts & Anchor Assembly.

ANCHOR BOLTS - TYPE 1

NOTES :

1. Standard foundation design is based on the following soil parameters, which are characteristic of the predominantly silty soils located throughout the greater Portland area:
   Soil internal friction angle: 26 degrees
   Soil effective unit weight = 110 pcf
2. Project bids for foundations shall be based on standard design depth as shown on this drawing. Additional foundation depth, if required for conditions as outlined below in notes 3-6, will be paid for by contract change order.
3. Shafts that encounter up to 3 feet of fill soil require the total foundation depth be increased by an amount equal to the thickness of the fill.
4. Shafts that encounter more than 3 feet of fill soil require a site observation and special foundation design provided by the city. Contractor to contact the city's project engineer to coordinate.
5. Shafts that encounter groundwater level in lower half of shaft require a 2-foot increase in total foundation depth.
6. Shafts that encounter groundwater level in upper half of shaft require a total foundation depth of 1.5 times the standard depth.

NOT TO SCALE

The selection and use of this Standard Drawing, while designed in accordance with generally accepted engineering principles and practices, is the sole responsibility of the user.

BUREAU OF TRANSPORTATION
CITY OF PORTLAND, OREGON
Steve Iverson
Chief Engineer

Standard Drawing Title

SIGNAL POLE FOOTING & ANCHOR BOLTS TYPE 1

Note:
All material and workmanship shall be in accordance with the City of Portland Standard Construction Specifications.

Effective Date:

Calc. Book No.:

Baseline Report Date:

Standard Drawing No.

P-606

Plot Date: 1/13/2011 12:42:47 PM Filename: Wpdotnustation\DETAILS\Standard Details\Traffic Signal Details\P-606 Signal Pole Footing Type 1.dgn
Plot Date: 2/11/2013 6:23:47 AM Filename: S:_ILDesign\T00121 - 50's Bikeway Woodstock Blvd-Thompson St, SE-NE\CAD\PLAN_SHEETS\SHT P-606 PORTLAND STANDARD DRAWING\PLOT_SHT_ P-606.dgn
11x17 PRINT SCALE: $SCALE$

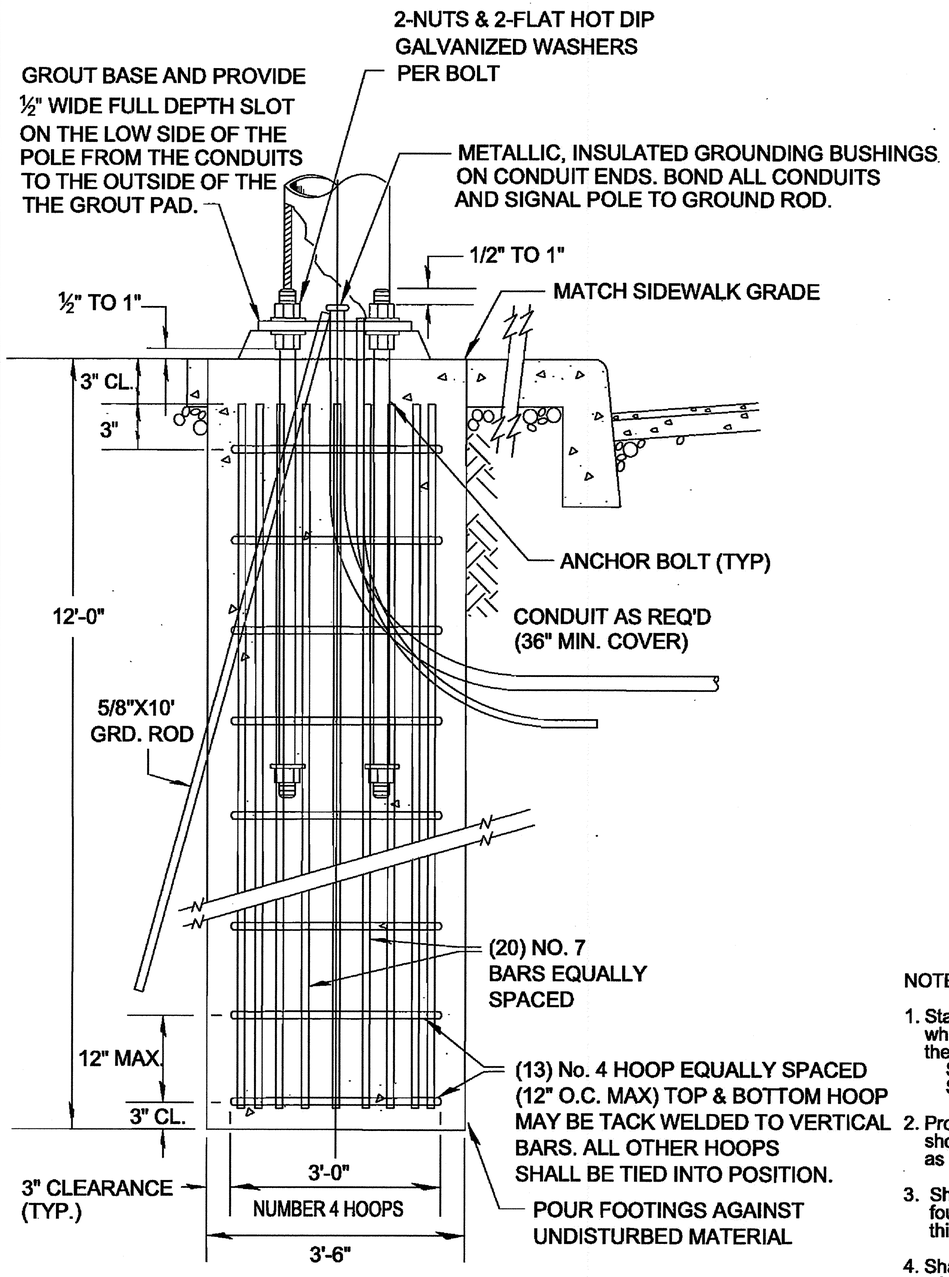

STEEL SIGNAL POLE
FOOTING DETAILS - TYPE 2 & 3

POLE TYPE	BASE PLATE TYPE	(BC)
TYPE 2	201 A	20.0"
TYPE 3	201 B	22.5"

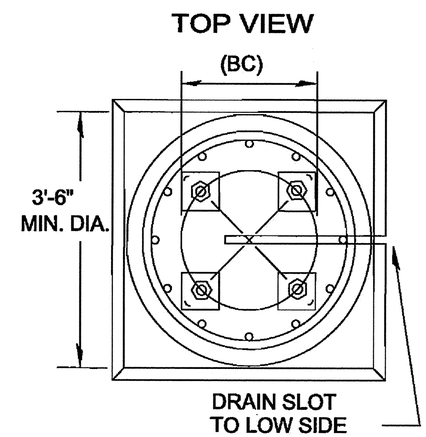

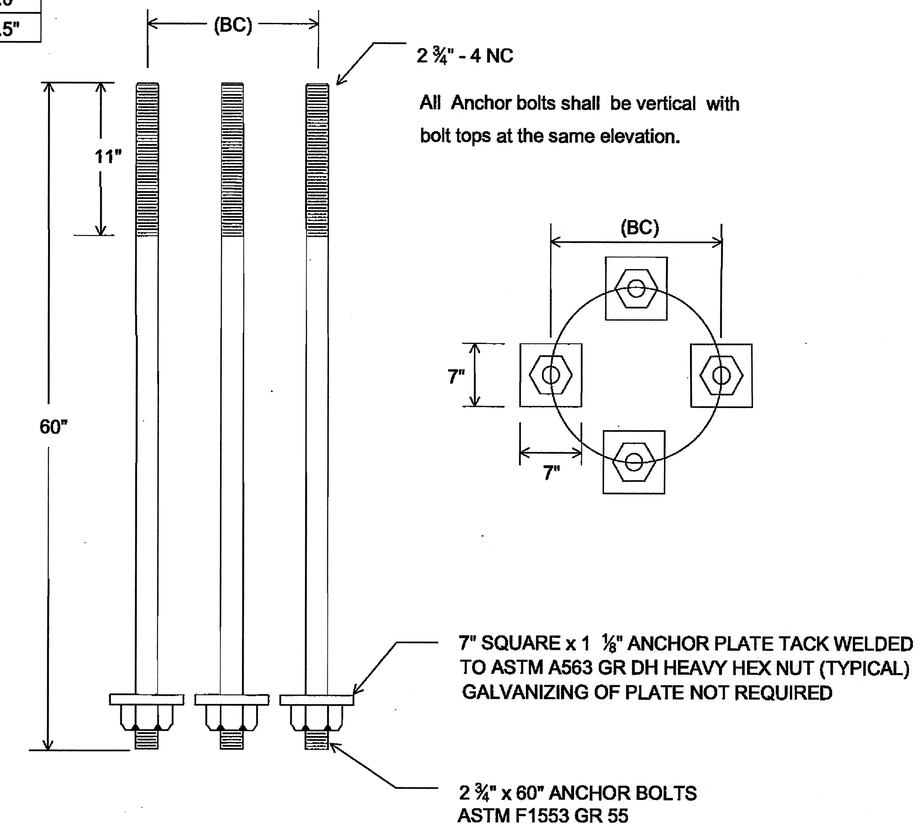

NOTE : Hot Dip Galvanized Nuts & Anchor Assembly.

ANCHOR BOLTS - TYPE 2 & 3

NOTES :

1. Standard foundation design is based on the following soil parameters, which are characteristic of the predominantly silty soils located throughout the greater Portland area:
   Soil internal friction angle: 26 degrees
   Soil effective unit weight = 110 pcf
2. Project bids for foundations shall be based on standard design depth as shown on this drawing. Additional foundation depth, if required for conditions as outlined below in notes 3-6, will be paid for by contract change order.
3. Shafts that encounter up to 3 feet of fill soil require the total foundation depth be increased by an amount equal to the thickness of the fill.
4. Shafts that encounter more than 3 feet of fill soil require a site observation and special foundation design provided by the city. Contractor to contact the city's project engineer to coordinate.
5. Shafts that encounter groundwater level in lower half of shaft require a 2-foot increase in total foundation depth.
6. Shafts that encounter groundwater level in upper half of shaft require a total foundation depth of 1.5 times the standard depth.

NOT TO SCALE

The selection and use of this Standard Drawing, while designed in accordance with generally accepted engineering principles and practices, is the sole responsibility of the user.

BUREAU OF TRANSPORTATION
CITY OF PORTLAND, OREGON
Steve Townsend
Chief Engineer

Standard Drawing Title
SIGNAL POLE FOOTING & ANCHOR BOLTS TYPE 2 & 3

Note:
All material and workmanship shall be in accordance with the City of Portland Standard Construction Specifications.

Effective Date:
Calc. Book No.:
Baseline Report Date:

Standard Drawing No.
P-607

Plot Date: 2/11/2013 6:24:36 AM Filename: S:_Ll_Design\T00121 - 50's Bikeway Woodstock Blvd-Thompson St, SE-NE\CAD\PLAN_SHEETS\SHT P-607 PORTLAND STANDARD DRAWING\PLOT_SHT_ P-607.dgn
Plot Date: 1/13/2011 12:42:41 PM Filename: \\pdcinfrastation\DETAILS\Standard Details\Traffic Signal Details\P-607 Signal Pole Footing Type 2.dgn
11x17 PRINT SCALE: $SCALE$

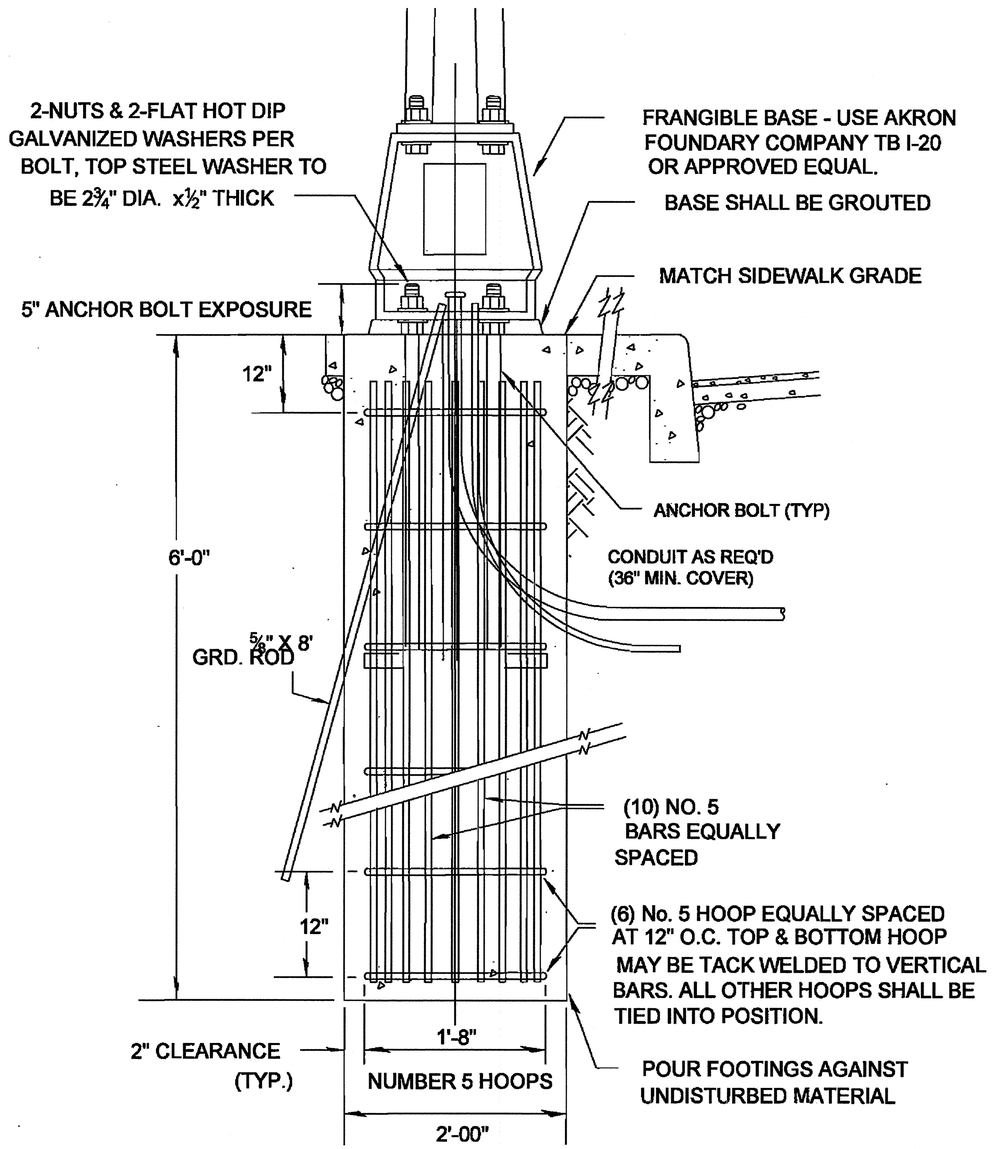

STEEL SIGNAL POLE ON FRANGIBLE BASE FOOTING DETAILS

NOTES:

POLE IS OCTAGONAL 3/16" ASTM A572 GR 50 SHAFT TAPERED 0.14 INCHES PER FOOT WITH A 4" DIAM. TOP TO FIT 4" STANDARD PIPE SLIPFITTER FOR SIGNAL HEAD OR PIPE CAP

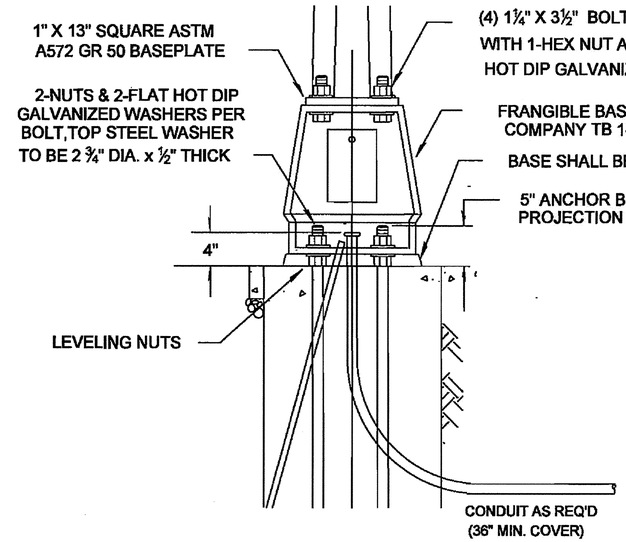

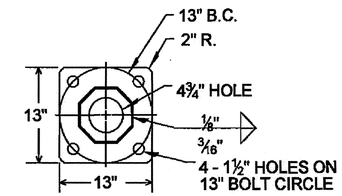

POLE BASEPLATE DETAIL

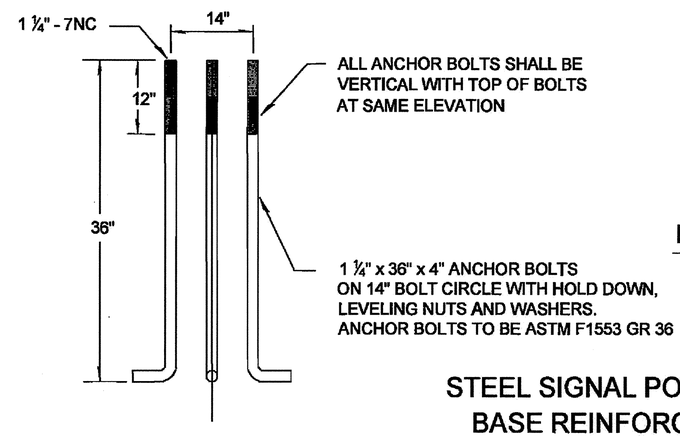

STEEL SIGNAL POLE ON FRANGIBLE BASE REINFORCING BOLT CAGE

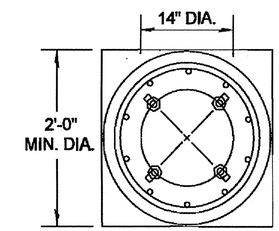

FOUNDATION TOP VIEW

NOT TO SCALE

The selection and use of this Standard Drawing, while designed in accordance with generally accepted engineering principles and practices, is the sole responsibility of the user.

BUREAU OF TRANSPORTATION
CITY OF PORTLAND, OREGON
Steve Townsend
Chief Engineer

Standard Drawing Title

SIGNAL POLE FOOTING FRANGIBLE BASE

Note:
All material and workmanship shall be in accordance with the City of Portland Standard Construction Specifications.

Effective Date: 09/09/09
Calc. Book No.: N/A
Baseline Report Date: N/A

Standard Drawing No.
P-608

Plot Date: 2/11/2013 6:25:27 AM Filename: S:_IL_Design\T00121- 50's Bikeway Woodstock Blvd-Thompson St, SE-NE\CAD\PLAN_SHEETS\SHT P-608 PORTLAND STANDARD DRAWING\PLOT_SHT_ P-608.dgn
Plot Date: 1/13/2011 12:46:42 PM Filename: \\pdxdn\tusation\DETAILS\Standard Details\Traffic Signal Details\P-608 Signal Pole Footing Frangible.dgn
11x17 PRINT SCALE: $SCALE$

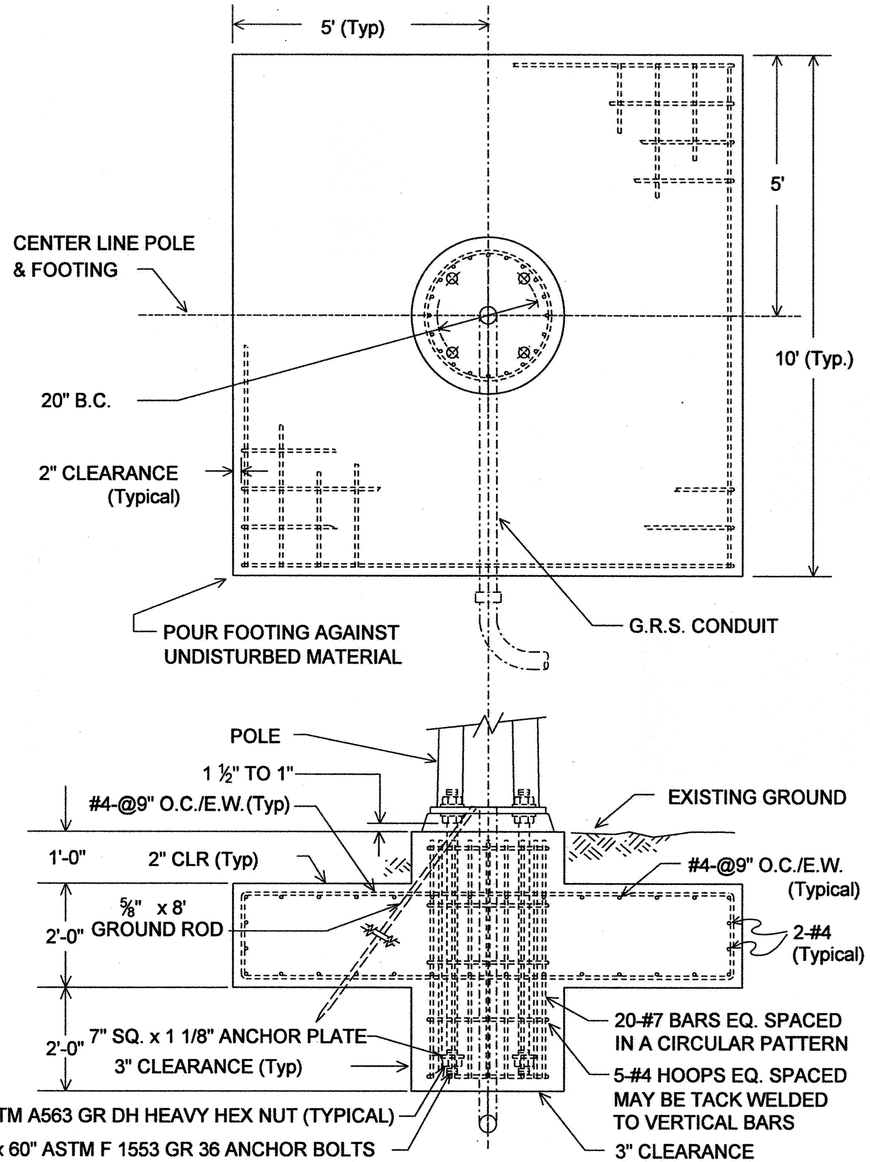

NOTE : WHEN PLACING GROUND ROD AVOID UNDERGROUND UTILITIES

STEEL SIGNAL POLE SPREAD FOOTING DETAIL (TYPE 2)

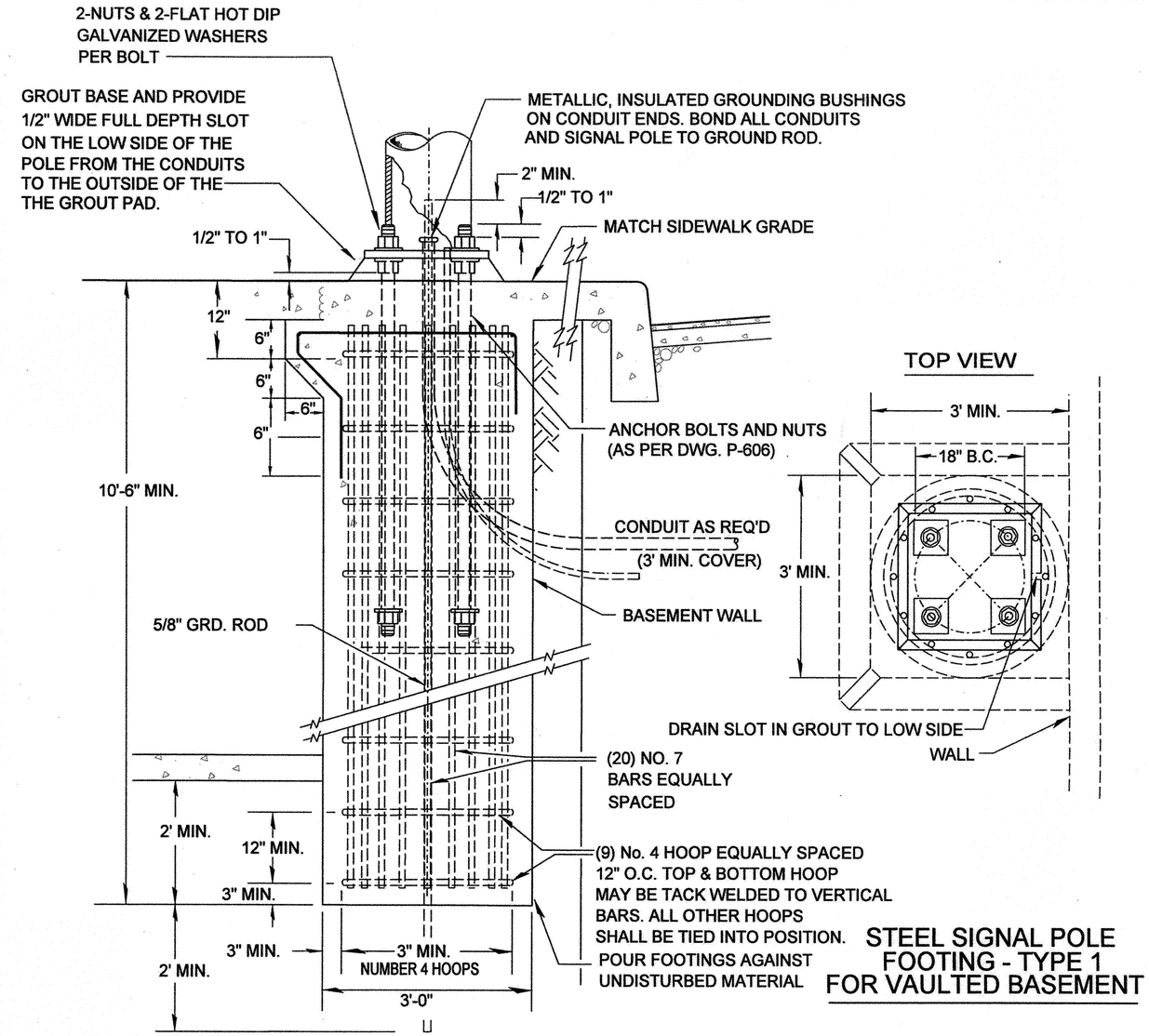

STEEL SIGNAL POLE FOOTING - TYPE 1 FOR VAULTED BASEMENT

NOT TO SCALE

The selection and use of this Standard Drawing, while designed in accordance with generally accepted engineering principles and practices, is the sole responsibility of the user.

BUREAU OF TRANSPORTATION
CITY OF PORTLAND, OREGON
Chief Engineer

Standard Drawing Title

SIGNAL POLE FOOTINGS - SPREAD & VAULTED BASEMENT

Note:
All material and workmanship shall be in accordance with the City of Portland Standard Construction Specifications.

Effective Date: 03-21-12

Calc. Book No.:

Baseline Report Date:

Standard Drawing No.

P-609

Plot Date: 2/11/2013 6:26:13 AM Filename: S:_II_Design\T00121 - 50's Bikeway Woodstock Blvd-Thompson St, SE-NE\CAD\PLAN_SHEETS\SHT P-609 PORTLAND STANDARD DRAWING\PLOT_SHT_ P-609.dgn
Plot Date: 3/22/2012 4:33:03 PM

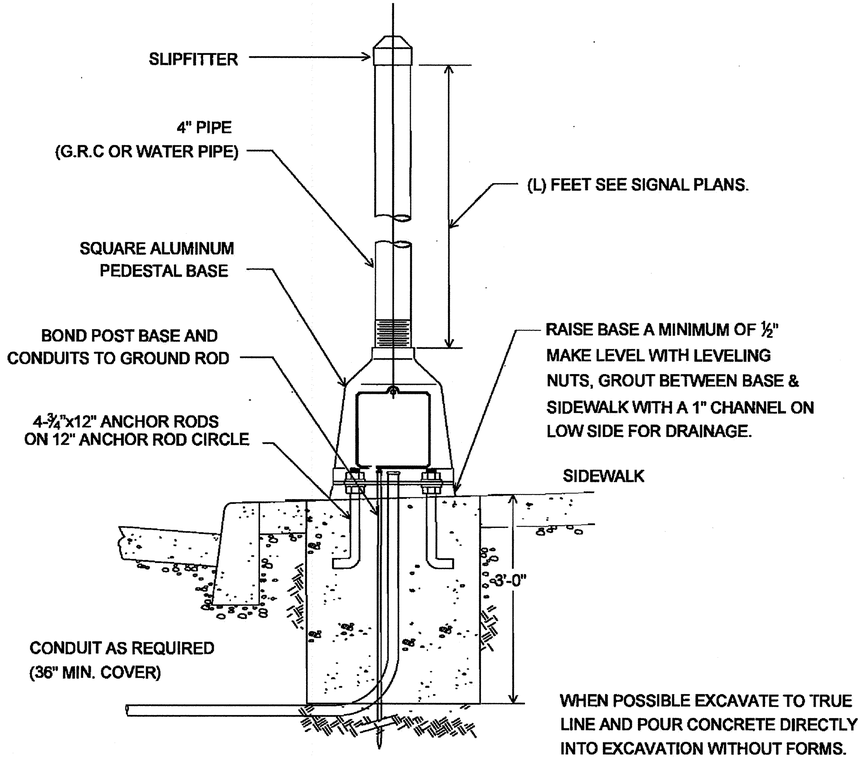

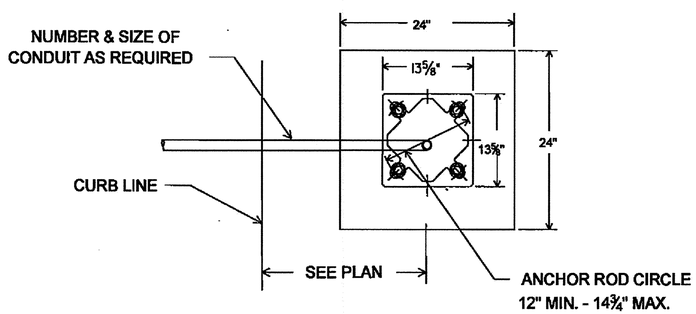

POST AND FOUNDATION FOR BASE MOUNTED SIGNAL POSTS

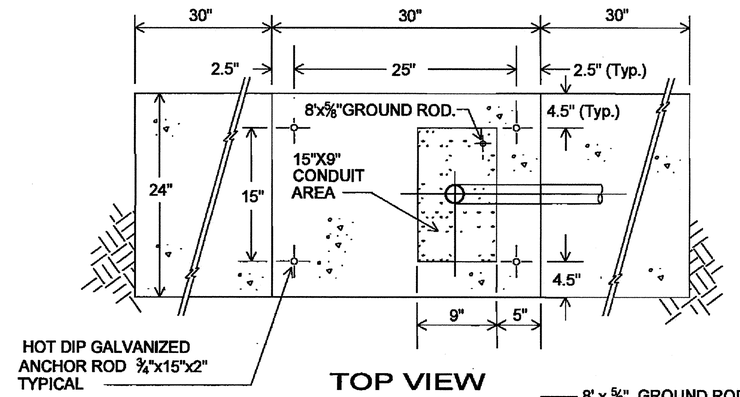

TOP VIEW

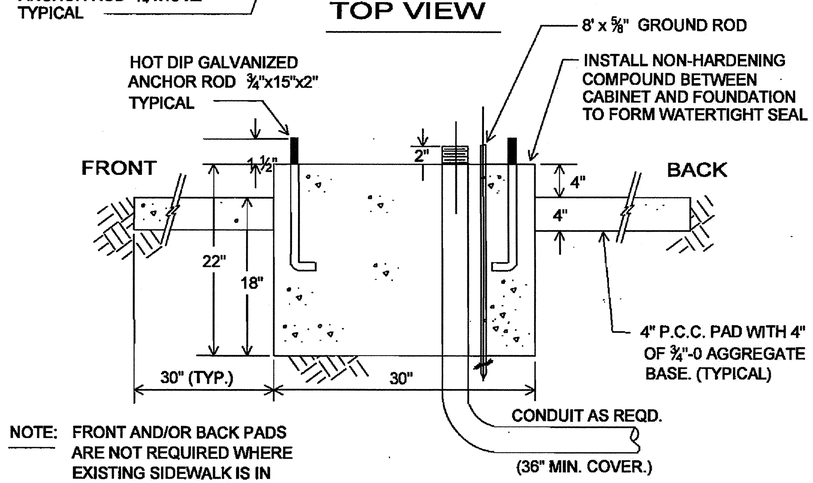

NOTE: FRONT AND/OR BACK PADS ARE NOT REQUIRED WHERE EXISTING SIDEWALK IS IN PLACE AT THAT LOCATION

RIGHT VIEW

FOUNDATION DETAIL TYPE 332 CABINET

NOT TO SCALE

The selection and use of this Standard Drawing, while designed in accordance with generally accepted engineering principles and practices, is the sole responsibility of the user.

BUREAU OF TRANSPORTATION
CITY OF PORTLAND, OREGON
Steve Iourman
Chief Engineer

Standard Drawing Title

BASE-MOUNTED SIGNAL POST FOOTING & TYPE 332 CABINET FOUNDATION DETAILS

Note:
All material and workmanship shall be in accordance with the City of Portland Standard Construction Specifications.

Effective Date: N/A
Calc. Book No.: N/A
Baseline Report Date: N/A

Standard Drawing No.
P-610

Plot Date: 2/11/2013 6:26:49 AM Filename: S:_II_Design\T00121 - 50's Bikeway Woodstock Blvd-Thompson St, SE-NE\CAD\PLAN_SHEETS\SHT P-610 PORTLAND STANDARD DRAWING\PLOT_SHT_ P-610.dgn
Plot Date: 1/13/2011 12:44:34 PM Filename: \\pdotntfs\station\DETAILS\Standard Details\Traffic Signal Details\P-610 Type 332 Cabinet & PP Footings.dgn
11x17 PRINT SCALE: $SCALE$

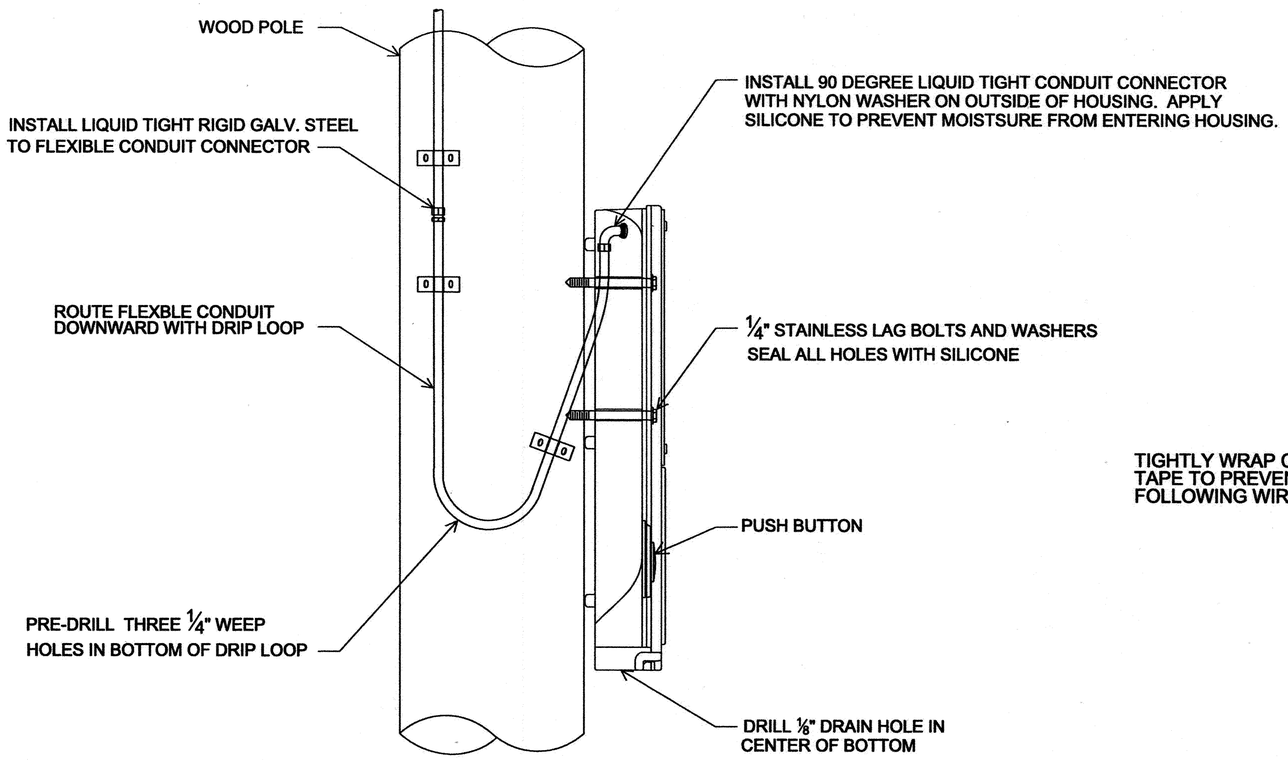

APS PUSHBUTTON ASSEMBLY
FOR WOOD POLE

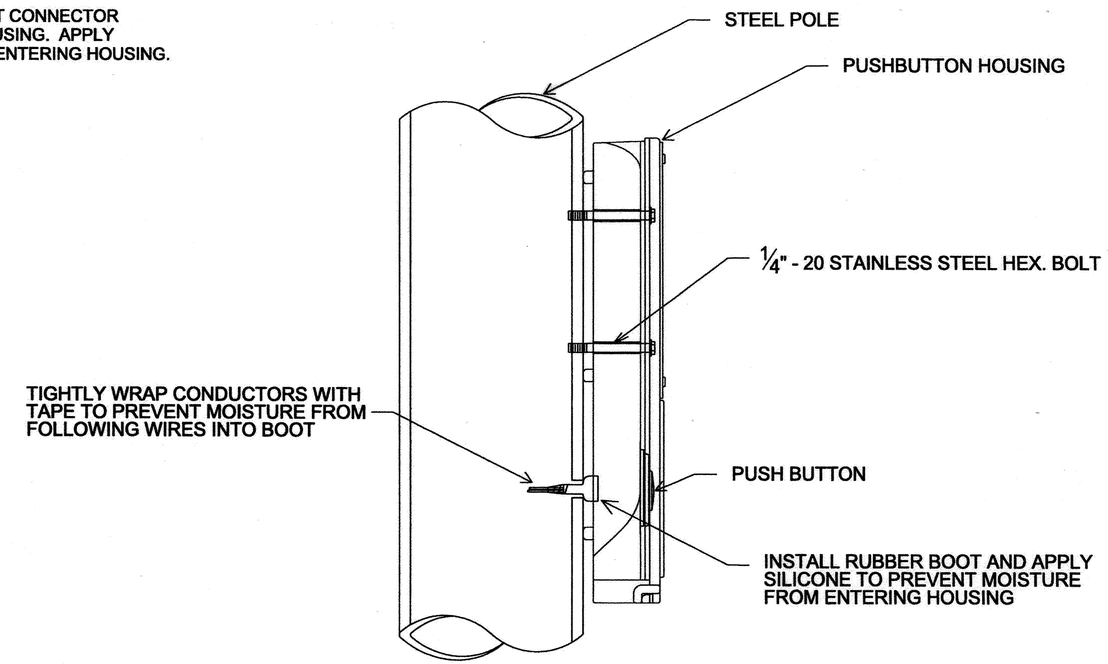

APS PUSHBUTTON ASSEMBLY
FOR STEEL POLE

NOT TO SCALE

APS PUSHBUTTON AND SIGN FACE

APS PUSHBUTTON AND SIGN FACE

The selection and use of this Standard Detail, while designed in accordance with generally accepted engineering principles and practices, is the sole responsibility of the user.

BUREAU OF TRANSPORTATION
CITY OF PORTLAND, OREGON
Steve Iverson
Chief Engineer

Standard Detail Title

"APS" PUSHBUTTON ASSEMBLY

Note:
All material and workmanship shall be in accordance with the City of Portland Standard Construction Specifications.

Effective Date: N/A
Calc. Book No.: N/A
Baseline Report Date: N/A

Standard Detail No.
P-620

Plot Date: 3/1/2011 3:54:36 PM Filename: \\pdotnfsstation\DETAILS\Standard Details\Traffic Signal Details\P-620 APS-Pushbutton Assembly.Rev 2-17-11.dgn 11x17 PRINT SCALE: 1.0000 ' / in.
Plot Date: 2/11/2013 6:27:31 AM Filename: S:_IL Design\T00121 - 50's Bikeway Woodstock Blvd-Thompson St, SE-NE\CAD\PLAN_SHEETS\SHT P-620 PORTLAND STANDARD DRAWING\PLOT_SHT_ P-620.dgn

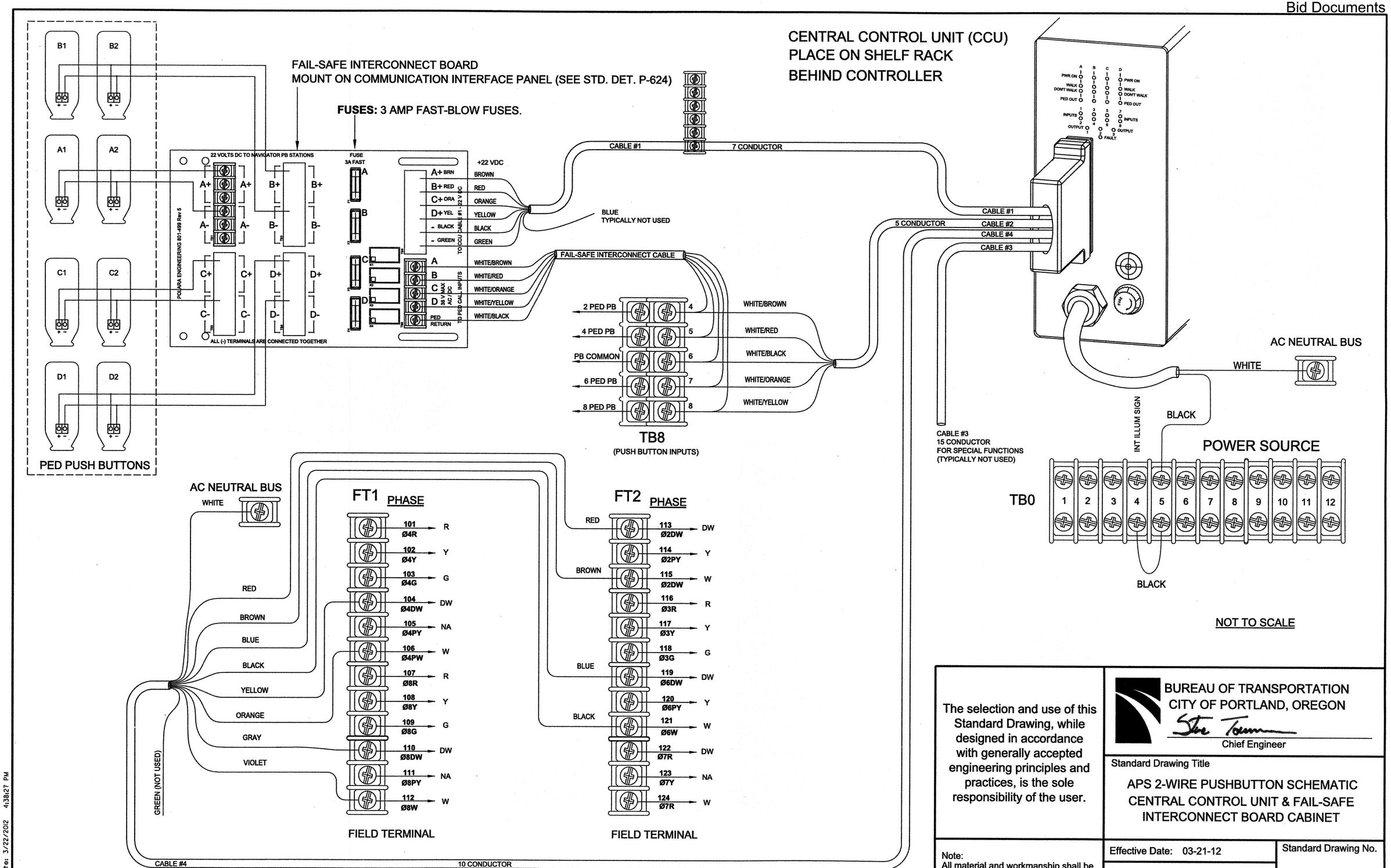

NOT TO SCALE

The selection and use of this Standard Drawing, while designed in accordance with generally accepted engineering principles and practices, is the sole responsibility of the user.

BUREAU OF TRANSPORTATION
CITY OF PORTLAND, OREGON

Chief Engineer

Standard Drawing Title

APS 2-WIRE PUSHBUTTON SCHEMATIC
CENTRAL CONTROL UNIT & FAIL-SAFE
INTERCONNECT BOARD CABINET

Note:
All material and workmanship shall be in accordance with the City of Portland Standard Construction Specifications.

Effective Date: 03-21-12

Calc. Book No.:

Baseline Report Date:

Standard Drawing No.

P-620(A)

Plot Date: 2/11/2013 6:30:50 AM Filename: S:_ILDesign\T00121- 50's Bikeway Woodstock Blvd-Thompson St, SE-NE\CAD\PLAN_SHEETS\SHT P-620A PORTLAND STANDARD DRAWING\PLOT_SHT_ P-620A.dgn
Plot Date: 3/22/2012 4:38:27 PM

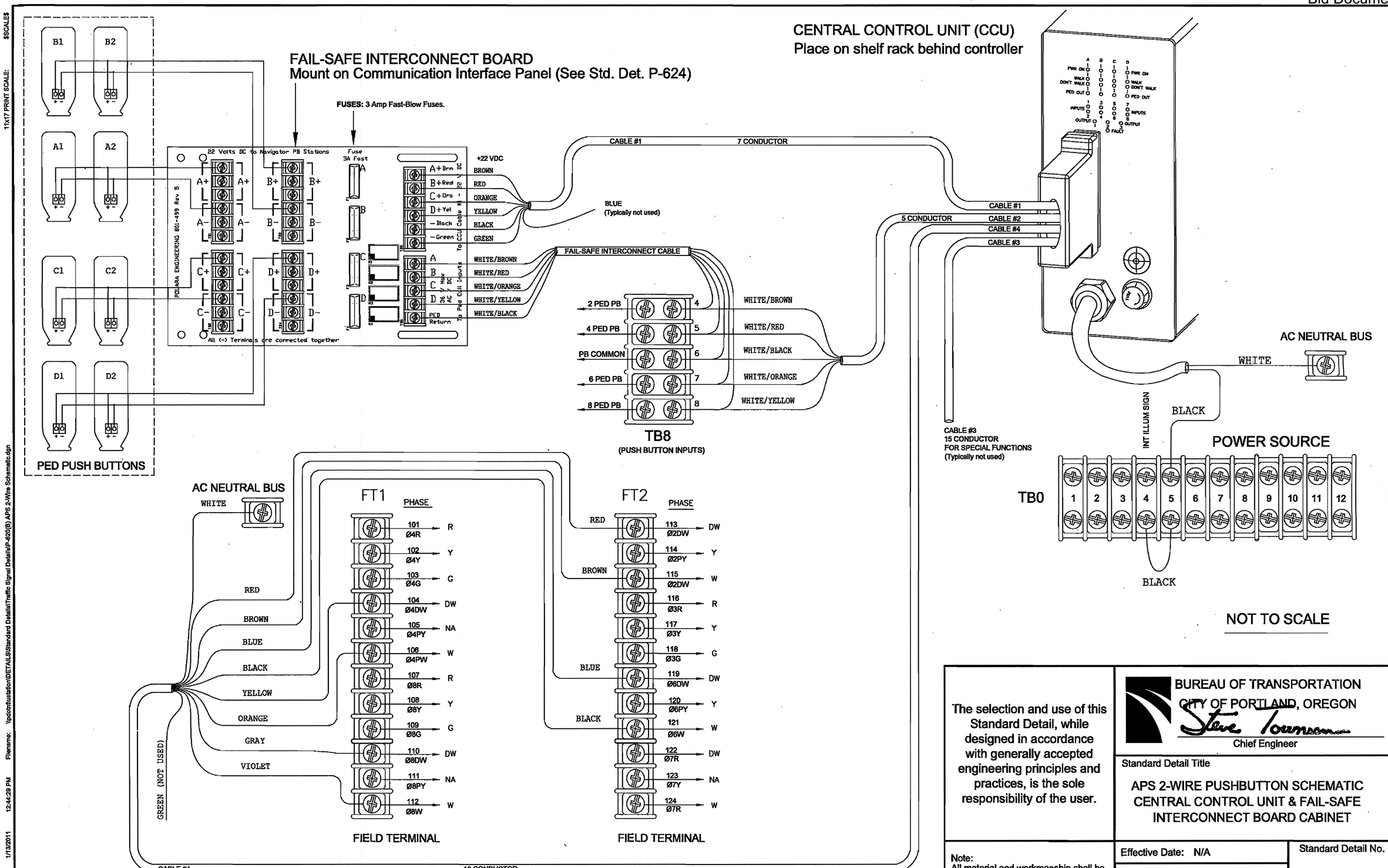

The selection and use of this Standard Detail, while designed in accordance with generally accepted engineering principles and practices, is the sole responsibility of the user.

BUREAU OF TRANSPORTATION
CITY OF PORTLAND, OREGON
Steve Tourman
Chief Engineer

Standard Detail Title

APS 2-WIRE PUSHBUTTON SCHEMATIC
CENTRAL CONTROL UNIT & FAIL-SAFE
INTERCONNECT BOARD CABINET

Note:
All material and workmanship shall be in accordance with the City of Portland Standard Construction Specifications.

Effective Date: N/A
Calc. Book No.: N/A
Baseline Report Date: N/A

Standard Detail No.
P-620(B)

Plot Date: 2/11/2013 6:31:23 AM Filename: S:_ILDesign\T00121- 50's Bikeway Woodstock Blvd-Thompson St, SE-NE\CAD\PLAN_SHEETS\SHT P-620B PORTLAND STANDARD DRAWING\PLOT_SHT_ P-620B.dgn
Plot Date: 1/13/2011 12:44:29 PM Filename: \\pdcinfustation\DETAILS\Standard Details\Traffic Signal Details\P-620(B) APS 2-Wire Schematic.dgn
11x17 PRINT SCALE: $SCALE$

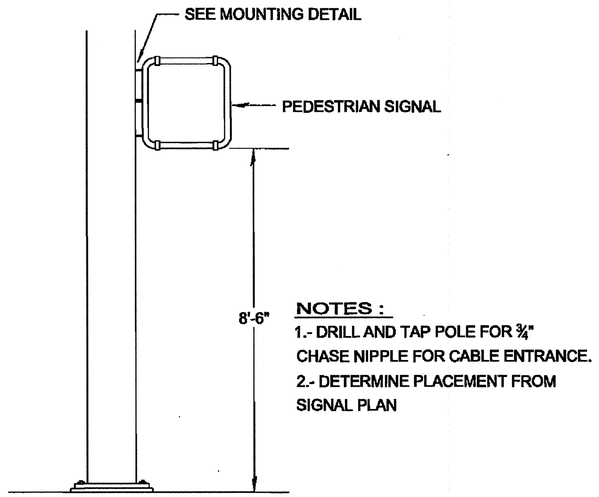

NOTES :
1.- DRILL AND TAP POLE FOR ¾" CHASE NIPPLE FOR CABLE ENTRANCE.
2.- DETERMINE PLACEMENT FROM SIGNAL PLAN

ELEVATION

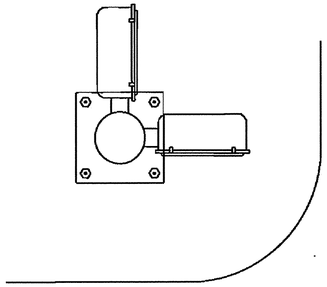

PLAN

PEDESTRIAN SIGNAL ON STEEL POLE WITH CLAM SHELL MOUNT

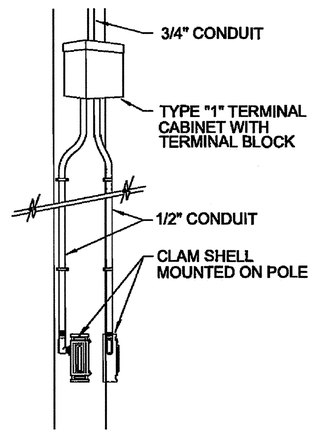

NOTE: PROVIDE 1/2" CONDUIT TO PUSHBUTTONS FROM TERMINAL CABINET IF REQUIRED.

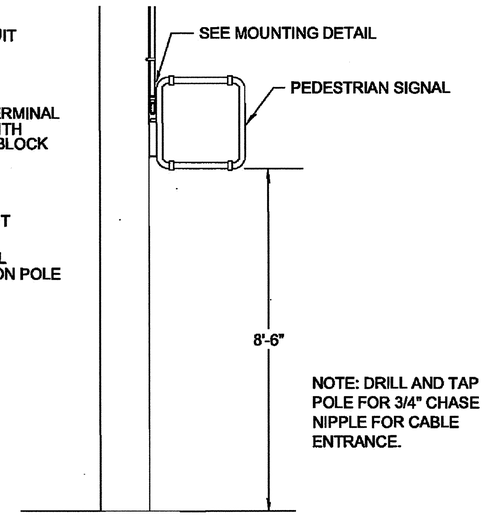

NOTE: DRILL AND TAP POLE FOR 3/4" CHASE NIPPLE FOR CABLE ENTRANCE.

ELEVATION

NOTE: DETERMINE PLACEMENT FROM SIGNAL PLAN

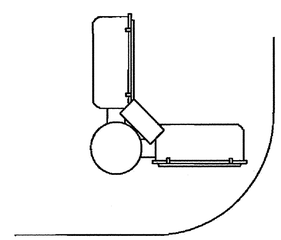

PLAN

PEDESTRIAN SIGNAL ON WOOD POLE WITH CLAM SHELL MOUNT

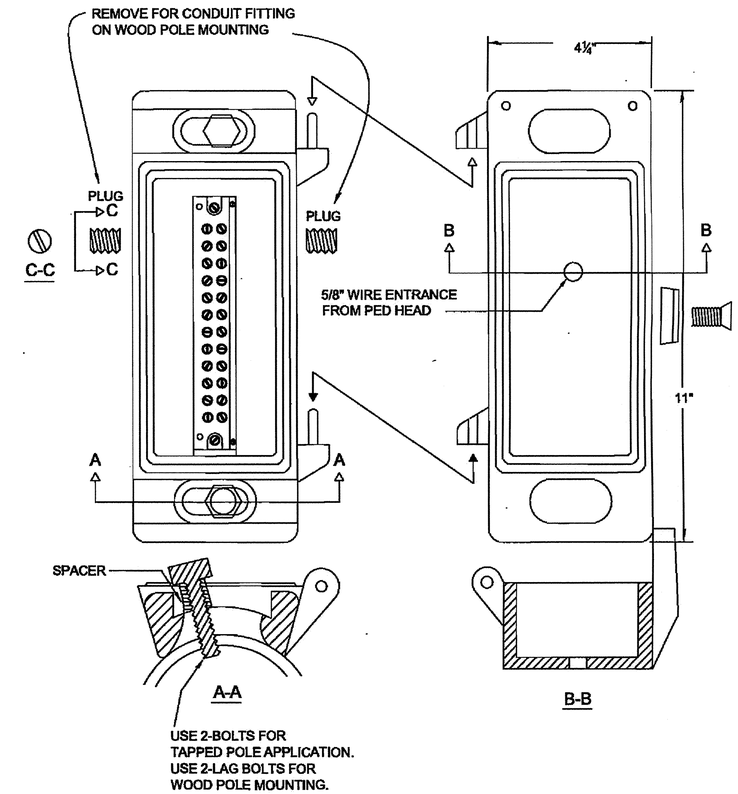

CLAM SHELL MOUNTING DETAIL FOR PEDESTRIAN SIGNAL

NOT TO SCALE

The selection and use of this Standard Detail, while designed in accordance with generally accepted engineering principles and practices, is the sole responsibility of the user.

BUREAU OF TRANSPORTATION
CITY OF PORTLAND, OREGON
Steve Iourman
Chief Engineer

Standard Detail Title

PEDESTRIAN SIGNAL MOUNTING ON STEEL AND WOOD POLES

Note:
All material and workmanship shall be in accordance with the City of Portland Standard Construction Specifications.

Effective Date: N/A
Calc. Book No.: N/A
Baseline Report Date: N/A

Standard Detail No.
P-622

Plot Date: 2/11/2013 6:32:13 AM Filename: S:_IL_Design\T00121 - 50's Bikeway Woodstock Blvd-Thompson St, SE-NE\CAD\PLAN_SHEETS\SHT P-622 PORTLAND STANDARD DRAWING\PLOT_SHT_ P-622.dgn
Plot Date: 1/13/2011 12:47:20 PM Filename: \\pdcinfrustation\DETAILS\Standard Details\Traffic Signal Details\P-622 Pedestrian Signal Mounting on Poles.dgn
11x17 PRINT SCALE: $SCALE$

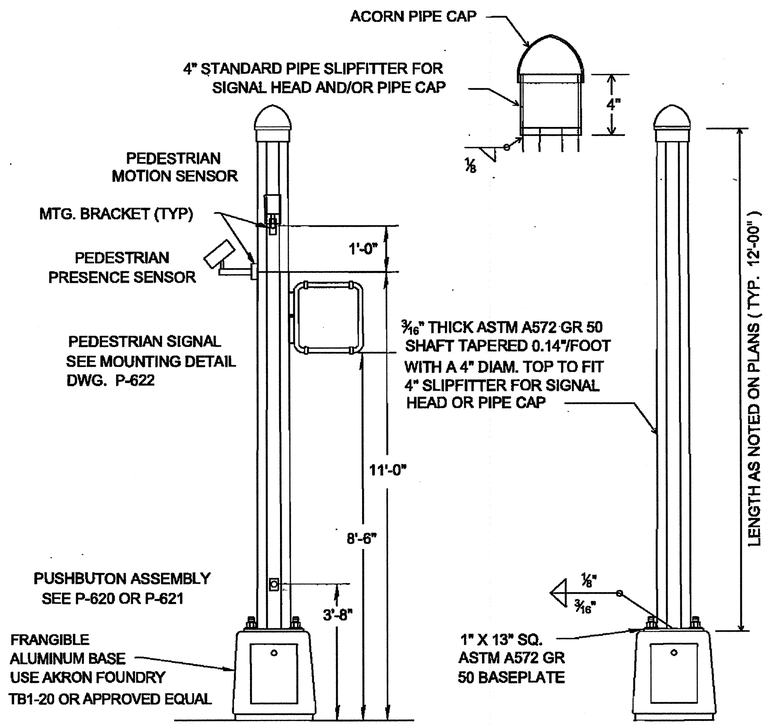

ELEVATION

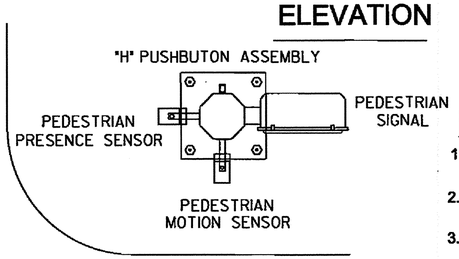

PLAN

NOTES :

1.- DRILL AND TAP POLE FOR ¾" CHASE NIPPLE FOR CABLE ENTRANCE.
2.- DETERMINE PLACEMENT FROM SIGNAL PLAN
3.- MOUNT PEDESTRIAN DETECTORS ABOVE 16" X 1-1/2" NIPPLE PER MANUFACTURER'S RECOMMENDATION.

PEDESTRIAN SENSORS AND CLAMSHELL MOUNTED PEDESTRIAN SIGNAL ON FRANGIBLE BASE POLE

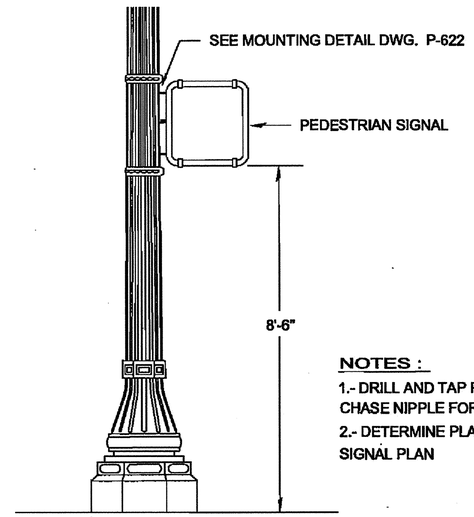

ELEVATION

NOTES :

1.- DRILL AND TAP POLE FOR ¾" CHASE NIPPLE FOR CABLE ENTRANCE.
2.- DETERMINE PLACEMENT FROM SIGNAL PLAN

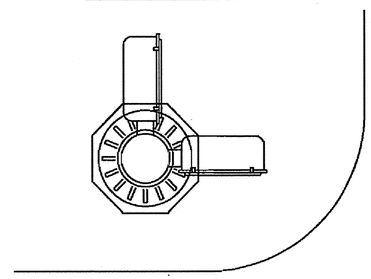

PLAN

CLAMSHELL MOUNTED PEDESTRIAN SIGNAL ON ORNAMENTAL STREET LIGHT POLE

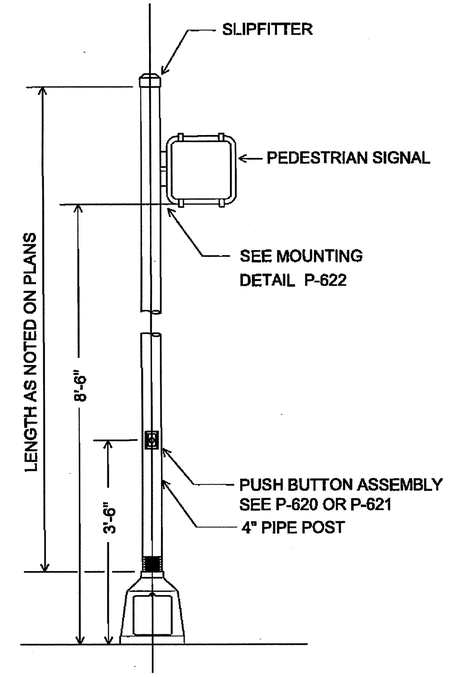

PEDESTRIAN SIGNAL & PUSHBUTTON ON PIPE POST

NOT TO SCALE

The selection and use of this Standard Detail, while designed in accordance with generally accepted engineering principles and practices, is the sole responsibility of the user.

BUREAU OF TRANSPORTATION
CITY OF PORTLAND, OREGON
Steve Iourman
Chief Engineer

Standard Detail Title

PEDESTRIAN SIGNAL, SENSOR, AND PUSHBUTTON ON FRANGIBLES, ORNAMENTALS, AND PIPE POSTS

Note:
All material and workmanship shall be in accordance with the City of Portland Standard Construction Specifications.

Effective Date: N/A
Calc. Book No.: N/A
Baseline Report Date: N/A

Standard Detail No.
P-623

Plot Date: 1/13/2011 12:42:39 PM Filename: \\pdotvtustation\DETAILS\Standard Details\Traffic Signal Details\P-623 Pedestrian Signal and Sensors on Poles.dgn
Plot Date: 2/1/2013 6:32:58 AM Filename: S:_LDesign\T0012I - 50's Bikeway Woodstock Blvd-Thompson St, SE-NE\CAD\PLAN_SHEETS\SHT P-623 PORTLAND STANDARD DRAWING\PLOT_SHT_ P-623.dgn
11x17 PRINT SCALE: $SCALE$

Plot Date: 1/13/2011 12:42:42 PM Filename: \\pdxinfrastation\DETAIL SI\Standard Details\Traffic Signal Details\P-624 Controller and Communication Cabinet Details.dgn
Plot Date: 2/11/2013 6:33:47 AM Filename: S:_ILDesign\T00121 - 50's Bikeway Woodstock Blvd-Thompson St, SE-NE\CAD\PLAN_SHEETS\SHT P-624 PORTLAND STANDARD DRAWING\PLOT_SHT_ P-624.dgn
11x17 PRINT SCALE: $SCALE$

RMS CABINET POWER DISTRIBUTION ONE-LINE DIAGRAM

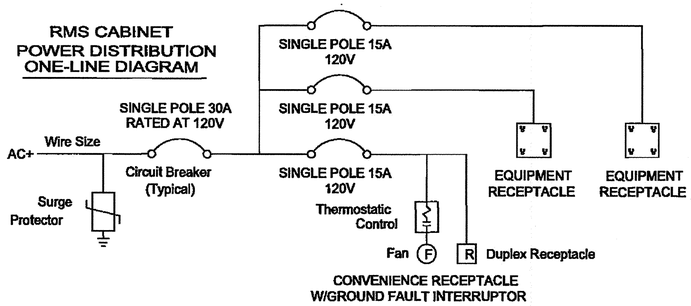

NOTES :

1. THE CONTRACTOR SHALL VERIFY ALL CONTROLLING FIELD DIMENSIONS BEFORE ORDERING OR FABRICATING MATERIAL.
2. MODIFY EXISTING PDA AS SHOWN IN POWER DISTRIBUTION BELOW.
3. NOT TO SCALE.

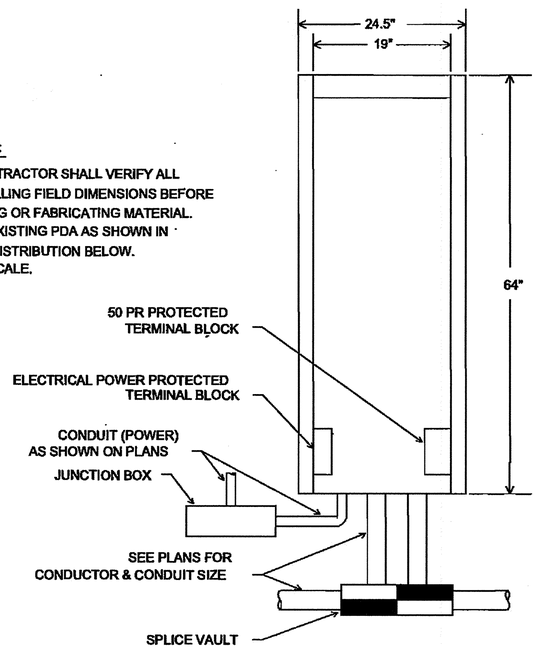

COMMUNICATIONS 334 CABINET

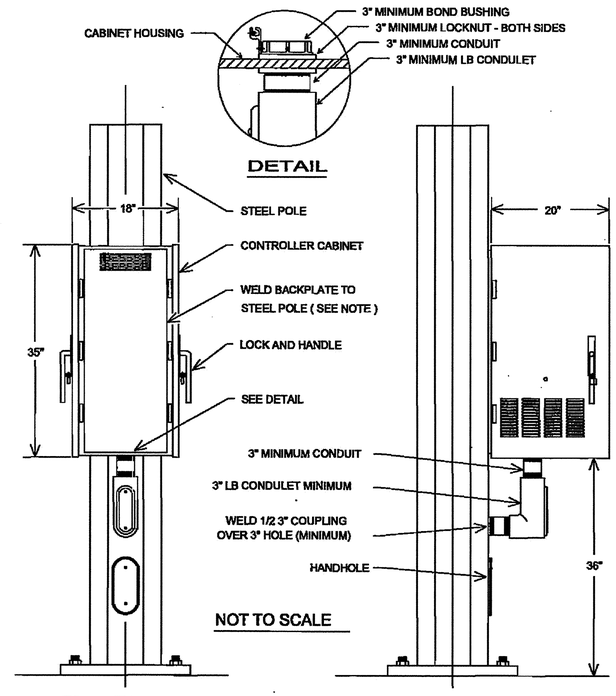

NOTE : BACKPLATE MADE FROM 1/4" MILD STEEL GALVANIZED BACKPLATE. DETERMINE DIMENSIONS BY MEASURING CABINET. TYPICAL DIMENSION IS 35" X 14" BUT MAY VARY.

CONTROLLER CABINET ON STEEL POLE.

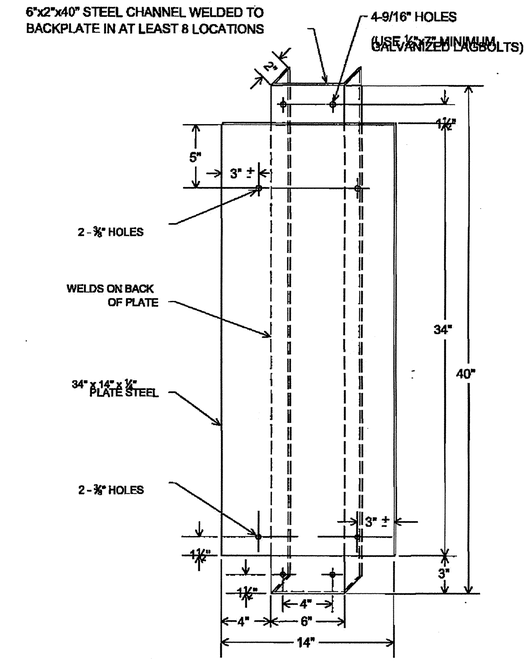

NOTE: AFTER FABRICATION THE ENTIRE ASSEMBLY IS PRIMERED AND PAINTED CAFE CREME.

(*) THE HOLE LOCATIONS IN THE STEEL PLATE MAY BE ADJUSTED TO FACILITATE BOLTING INSIDE THE CONTROLLER.

BACKPLATE FOR WOOD POLE MOUNTING OF 337 CABINET

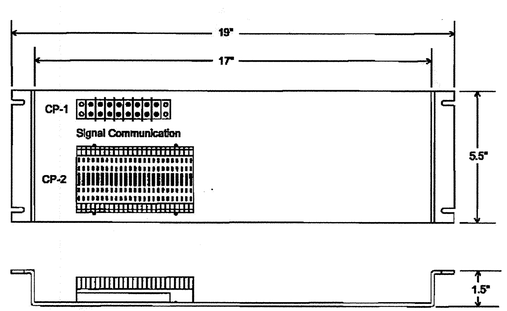

COMMUNICATION PANEL
RACK MOUNTED

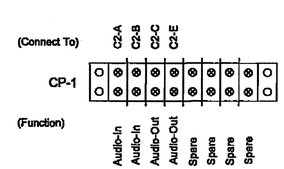

NOT TO SCALE

COMMUNICATION PANEL WIRING

NOTES :

Terminal Block - CP-1 8 Position Double Terminals.
Terminal Block - CP-2 Punch Type 66 Down Block (25 X 3+3).
Panel - 0.125" Aluminum.

COMMUNICATION INTERFACE PANEL

The selection and use of this Standard Detail, while designed in accordance with generally accepted engineering principles and practices, is the sole responsibility of the user.

BUREAU OF TRANSPORTATION
CITY OF PORTLAND, OREGON
Steve Iourmanov
Chief Engineer

Standard Detail Title

CONTROLLER CABINET AND COMMUNICATION INTERFACE DETAILS

Note:
All material and workmanship shall be in accordance with the City of Portland Standard Construction Specifications.

Effective Date: N/A
Calc. Book No.: N/A
Baseline Report Date: N/A

Standard Detail No.
P-624

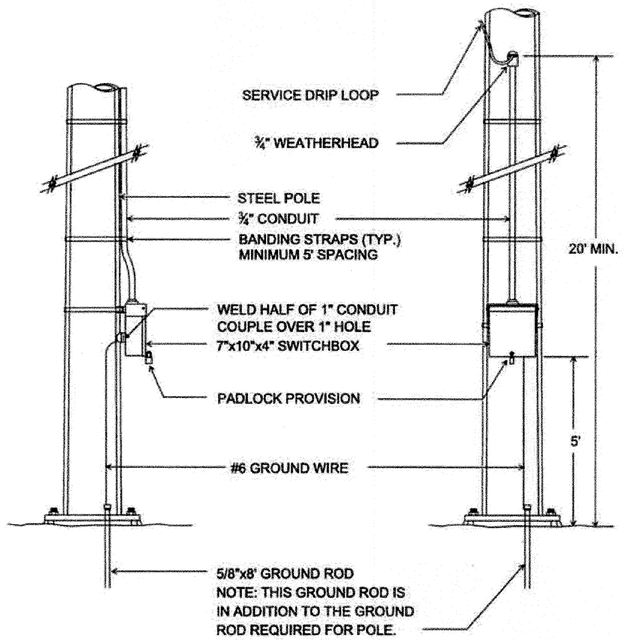

OVERHEAD SERVICE
INSTALLATION WITHOUT METER
ON STEEL POLE.

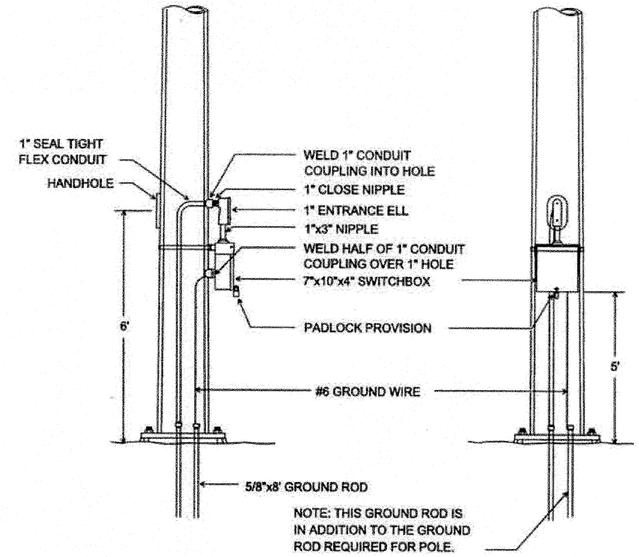

UNDERGROUND SERVICE
INSTALLATION WITHOUT METER
ON STEEL POLE.

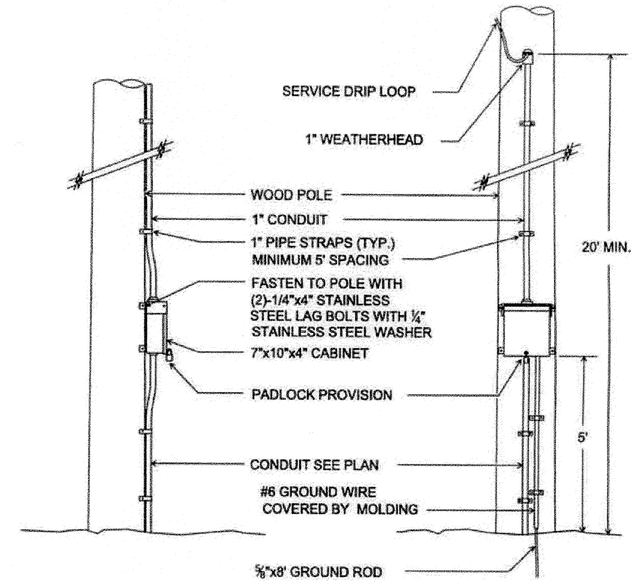

OVERHEAD SERVICE
INSTALLATION WITHOUT METER
ON WOOD POLE.

NOT TO SCALE

The selection and use of this Standard Detail, while designed in accordance with generally accepted engineering principles and practices, is the sole responsibility of the user.

BUREAU OF TRANSPORTATION
CITY OF PORTLAND, OREGON
Chief Engineer

Standard Detail Title
SERVICE INSTALLATION
ON STEEL AND
WOOD POLES

Note:
All material and workmanship shall be in accordance with the City of Portland Standard Construction Specifications.

Effective Date: N/A
Calc. Book No.: N/A
Baseline Report Date: N/A

Standard Detail No.
P-625

Plot Date: 2/10/2011 9:26:33 AM Filename: T:\DETAILS\Standard Details\Traffic Signal Details\P-625 Service Installation Rev 2-10-11.dgn 11x17 PRINT SCALE: 1.0001 ' / in.
Plot Date: 2/11/2013 6:34:29 AM Filename: S:_IL Design\T00121 - 50's Bikeway Woodstock Blvd-Thompson St, SE-NE\CAD\PLAN_SHEETS\SHT P-625 PORTLAND STANDARD DRAWING\PLOT_SHT. P-625.dgn

Plot Date: 2/11/2013 6:35:39 AM Filename: S:_IL_Design\T00121- 50's Bikeway Woodstock Blvd-Thompson St, SE-NE\CAD\PLAN_SHEETS\SHT P-626 PORTLAND STANDARD DRAWING\PLOT_SHT_ P-626.dgn
Plot Date: 1/13/2011 12:42:46 PM Filename: \\pdotntustation\DETAILS\Standard Details\Traffic Signal Details\P-626 Service Cabinets.dgn
11x17 PRINT SCALE: $SCALE$

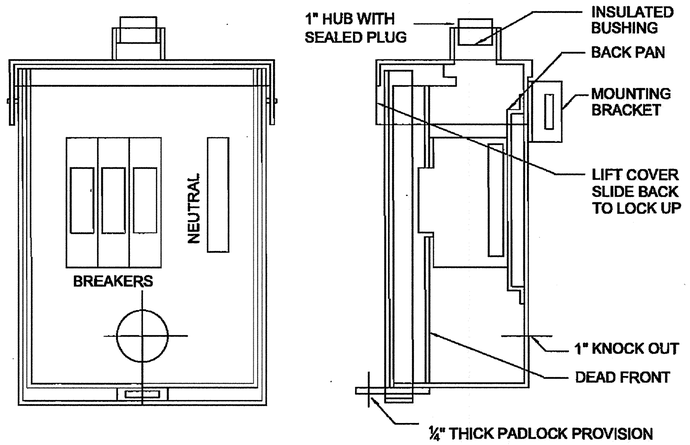

STEEL POLE MOUNTING

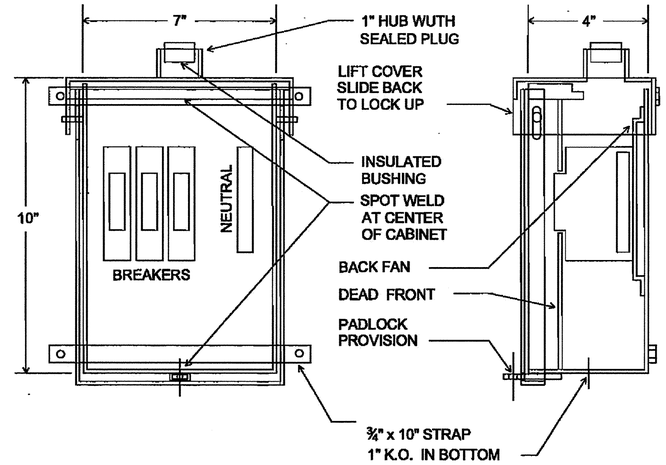

FABRICATION

CABINET OF 14 GA. MILL FINISH TYPE 304 STAINLESS STEEL SPOT WELDED CONSTRUCTION UL LISTED AS SERVICE EQUIP. LABEL CUTOUT BOX RAINTIGHT CIRCUIT BREAKERS : THQC GENERAL ELECTRIC

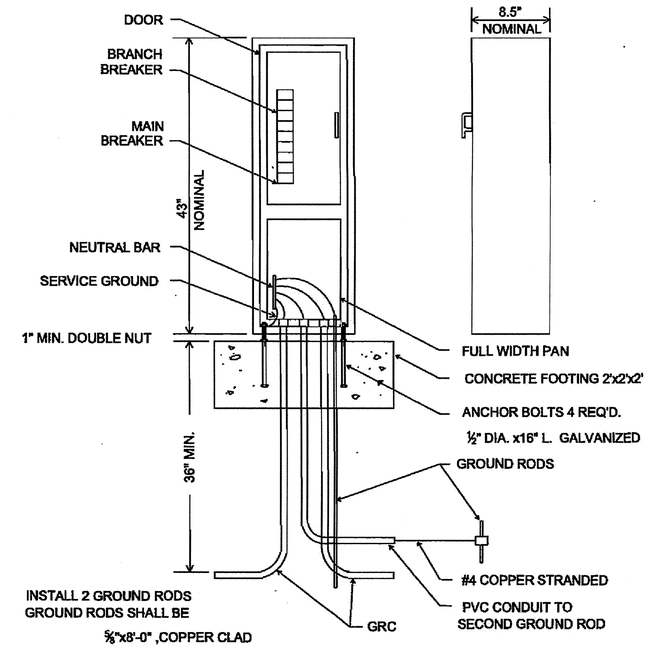

TRAFFIC SIGNALS

MOUNTING PAD MOUNTING PEDESTAL		BUS & MAIN 100A MCB	PANEL TS
LOCATION N. VANCOUVER &PORTLAND		PHASE AMPS	VOLTAGE 120/240/1
C	SERVICE	WATTS	A/P NO A B NO
1	TRAFFIC SIGNAL	3200	40/1 1

LABEL :	OWNER	CITY OF PORTLAND
	BILLING ADDRESS	PORTLAND, OREGON
	LOCATION	N. VANCOUVER & PORTLAND BLVD.
	LOAD TYPE	TRAFFIC SIGNALS

LOAD SUMMARY		
	LOAD CODE	PHASE A
1	TRAFFIC SIGNAL	3200
	TOTAL	= 3200
	TOTAL PANEL LOAD IN KILOWATTS	= 3.2

TRAFFIC SIGNAL SERVICE PEDESTAL

FABRICATION

CABINET OF 14 GA. MILL FINISH TYPE 304 STAINLESS STEEL

SPOT WELDED CONSTRUCTION

UL LISTED AS SERVICE EQUIP. LABEL CUTOUT BOX RAINTIGHT

CIRCUIT BREAKERS: GE TYPE THQC

NOT TO SCALE

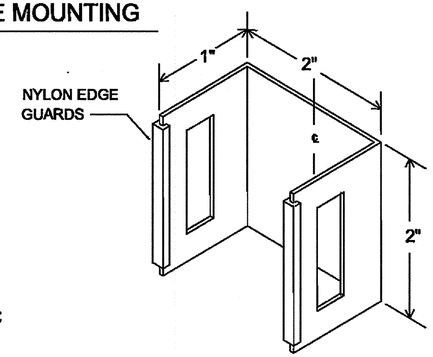

BRACKET DETAIL

WEATHERPROOF TRAFFIC SIGNAL SERVICE CABINET STEEL POLE MOUNTING

WEATHERPROOF TRAFFIC SIGNAL SERVICE CABINET WOOD POLE MOUNTING

NOT TO SCALE

The selection and use of this Standard Detail, while designed in accordance with generally accepted engineering principles and practices, is the sole responsibility of the user.

BUREAU OF TRANSPORTATION
CITY OF PORTLAND, OREGON
Steve Iourman
Chief Engineer

Standard Detail Title

SERVICE CABINETS FOR STEEL AND WOOD POLES AND ON PEDESTALS

Note:
All material and workmanship shall be in accordance with the City of Portland Standard Construction Specifications.

Effective Date: N/A
Calc. Book No.: N/A
Baseline Report Date: N/A

Standard Detail No.
P-626

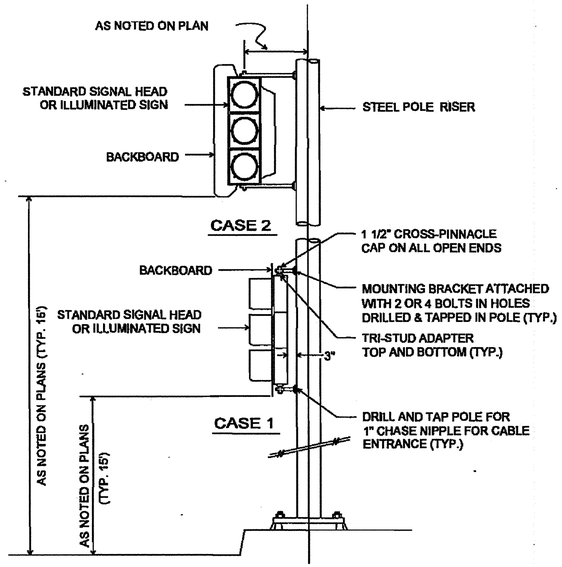

SIGNAL OR ILLUMINATED SIGN MOUNTING ON STEEL POLE RISER

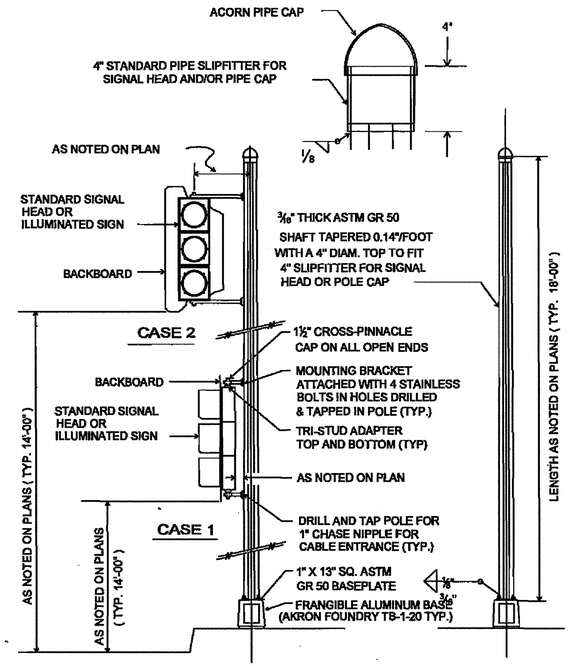

SIGNAL HEAD OR ILLUMINATED SIGN MOUNTING ON FRANGIBLE BASE POLE

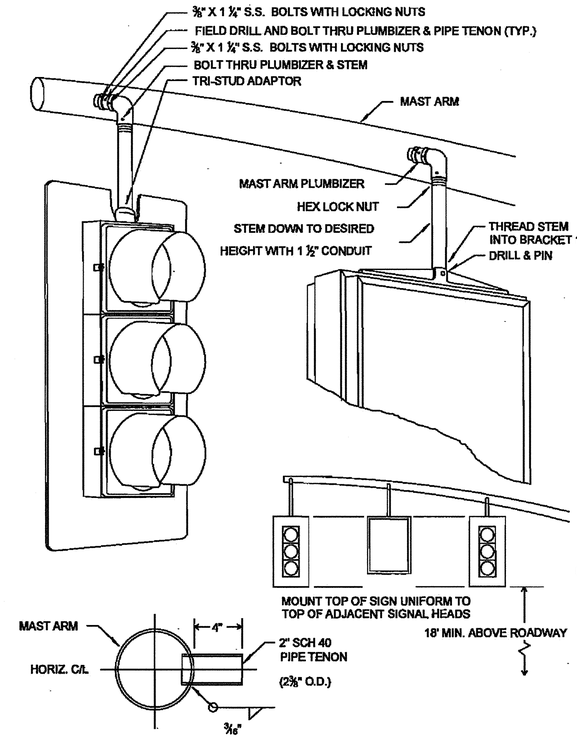

NOTE :

1. - ALL BOLTS,NUTS,WASHERS & SET SCREWS SHALL BE STAINLESS STEEL.

MAST ARM SUSPENDED SIGNAL AND SIGN

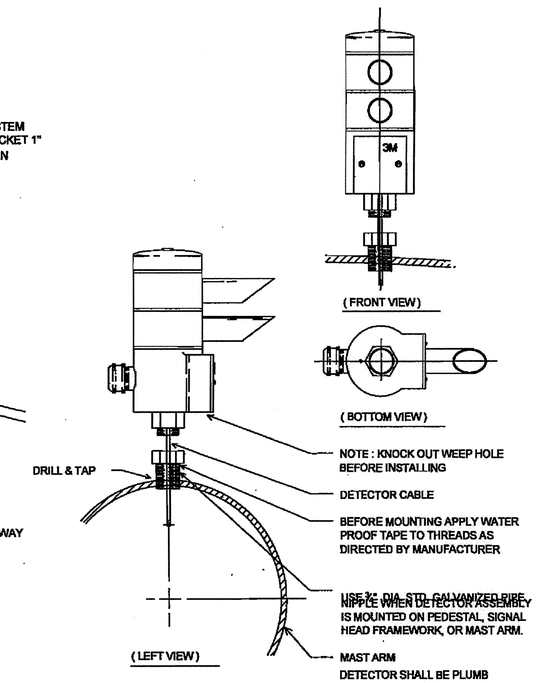

OPTICOM DETECTOR MAST ARM MOUNTING

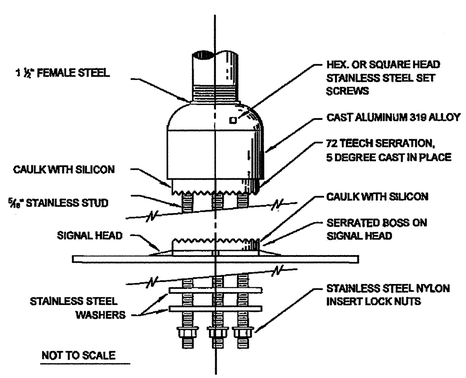

NOTE : ALL SET SCREWS SHALL BE DRILLED & TAPPED TO ALLOW SET SCREW TO EXTEND INTO ADJACENT PART.

VEHICLE SIGNAL MOUNTING DETAIL TRI-STUD ADAPTER

NOTES

1 - BOND MESSENGER TO GROUNDING BUSHING OUTSIDE OF AND ON THE BOTTOM OF TERMINAL CABINET.
2- ON WOOD POLES FASTEN TERMINAL CABINET WITH 2-1/4" x 2" LAG SCREWS.
3- CONDUCTORS INTO A METAL POLE SHALL BE ROUTED OVER THE EYEBOLT ABOVE THE TERMINAL CABINET. EYEBOLT THREADS WITHIN THE POLE SHALL BE TAPED.
4- 8" MINIMUM LOOP REQUIRED WHERE CONDUCTORS JOIN MESSENGER CABLE.

T.E. SIZE	WIDTH x	HEIGHT y	DEPTH d	DIA. s
1	6	8	4	2
2	8	10	4	2 1/2
3	8	16	4	3
4	12	16	4	3
5	12	16	6	3 1/2

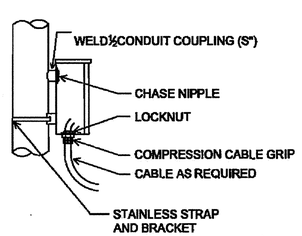

TYPICAL INSTALLATION ON STEEL POLE

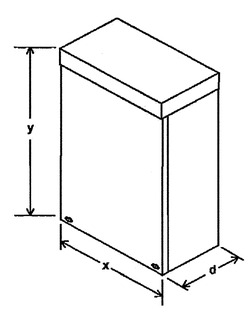

RAINTIGHT TERMINAL CABINET

NOT TO SCALE

The selection and use of this Standard Detail, while designed in accordance with generally accepted engineering principles and practices, is the sole responsibility of the user.

BUREAU OF TRANSPORTATION
CITY OF PORTLAND, OREGON
Steve Iorenzen
Chief Engineer

Standard Detail Title

SIGNAL EQUIPMENT POLE & MAST ARM MOUNTED DETAILS

Note:
All material and workmanship shall be in accordance with the City of Portland Standard Construction Specifications.

Effective Date: N/A
Calc. Book No.: N/A
Baseline Report Date: N/A

Standard Detail No.
P-627

Plot Date: 2/11/2013 6:36:23 AM Filename: S:_Il_Design\T00121 - 50's Bikeway Woodstock Blvd-Thompson St, SE-NE\CAD\PLAN_SHEETS\SHT P-627 PORTLAND STANDARD DRAWING\PLOT_SHT_ P-627.dgn
Plot Date: 1/13/2011 12:42:51 PM Filename: \\pdcfnt\ustation\DETAILS\Standard Details\Traffic Signal Details\P-627 Pole Mounted Signal Details.dgn
11x17 PRINT SCALE: $SCALE$

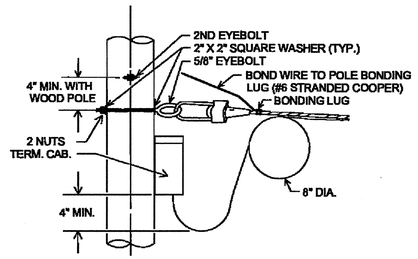

DETAIL

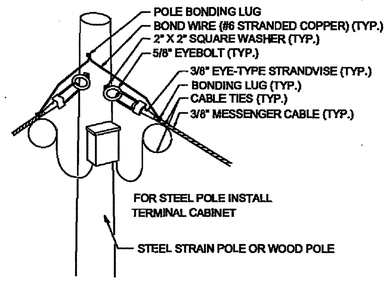

NOTE: MESSENGER CABLE SHALL BE BONDED TO STEEL POLE OR TO RISER BELOW WEATHERHEAD WITH TOWN & COUNTRY CLAMP ON WOOD POLE.

MESSENGER ATTACHMENT WITH BONDING LUG AND BOND WIRE

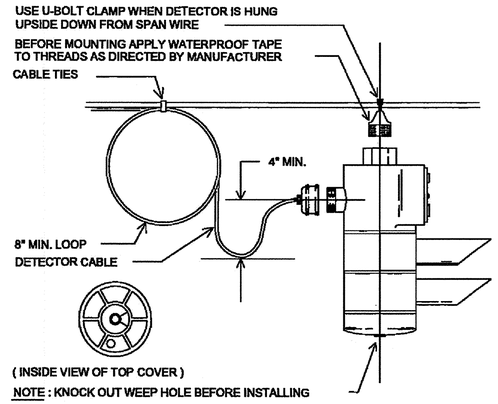

NOTE : ROUTE CONTROL CABLES ABOVE ATTACHMENT POINT SO THEY DO NOT CONTACT DETECTOR

OPTICOM DETECTOR SPAN WIRE INSTALLATION

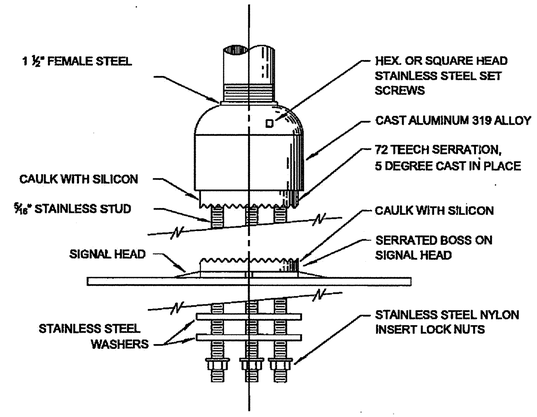

NOTE : ALL SET SCREWS SHALL BE DRILLED & TAPPED TO ALLOW SET SCREW TO EXTEND INTO ADJACENT PART.

VEHICLE SIGNAL MOUNTING DETAIL TRI-STUD ADAPTER

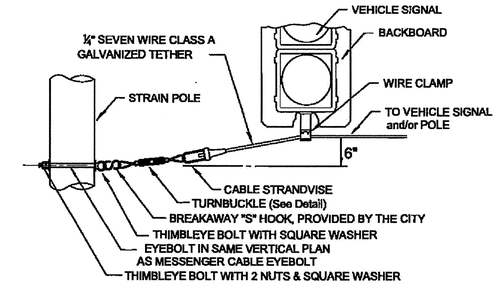

TURNBUCKLES SHALL BE CONSTRUCTED OF HOT-DIPPED GALVANIZED STEEL WITH A MINIMUM WORKING LOAD OF 2200 POUNDS.

TURNBUCKLE DETAIL

TETHER WIRE DETAIL

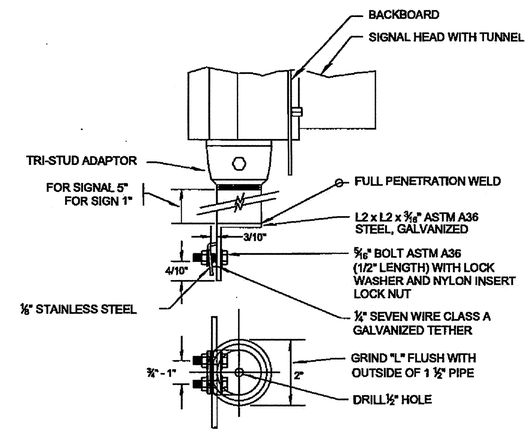

WIRE CLAMP FOR STANDARD VEHICLE SIGNAL AND ILLUMINATED SIGN

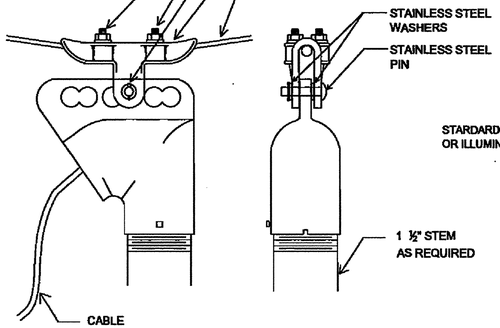

SUSPENSION FITTING

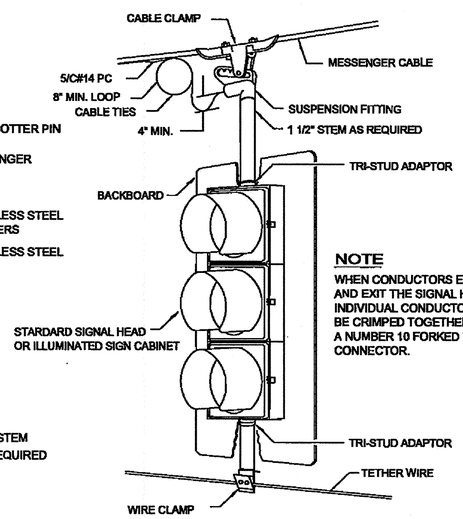

NOTE

WHEN CONDUCTORS ENTER AND EXIT THE SIGNAL HEAD, INDIVIDUAL CONDUCTORS SHALL BE CRIMPED TOGETHER WITH A NUMBER 10 FORKED TONGUE CONNECTOR.

SPAN WIRE SUSPENDED SIGNAL HEAD OR SIGN CABINET

NOTES

1 - BOND MESSENGER TO GROUNDING BUSHING OUTSIDE OF AND ON THE BOTTOM OF TERMINAL CABINET.
2- ON WOOD POLES FASTEN TERMINAL CABINET WITH 2-1/4" x 2" LAG SCREWS.
3- CONDUCTORS INTO A METAL POLE SHALL BE ROUTED OVER THE EYEBOLT ABOVE THE TERMINAL CABINET. EYEBOLT THREADS WITHIN THE POLE SHALL BE TAPED.
4- 8" MINIMUM LOOP REQUIRED WHERE CONDUCTORS JOIN MESSENGER CABLE.

T.E. SIZE	WIDTH x	HEIGHT y	DEPTH d	DIA. s
1	6	8	4	2
2	8	10	4	2 1/2
3	8	16	4	3
4	12	16	4	3
5	12	16	6	3 1/2

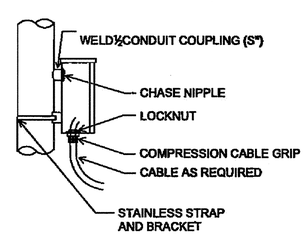

TYPICAL INSTALLATION ON STEEL STRAIN POLE

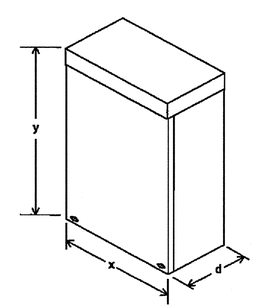

RAINTIGHT TERMINAL CABINET

NOT TO SCALE

The selection and use of this Standard Detail, while designed in accordance with generally accepted engineering principles and practices, is the sole responsibility of the user.

BUREAU OF TRANSPORTATION
CITY OF PORTLAND, OREGON
Steve Townsend
Chief Engineer

Standard Detail Title

SIGNAL EQUIPMENT SPAN WIRE INSTALLATION DETAILS

Note:
All material and workmanship shall be in accordance with the City of Portland Standard Construction Specifications.

Effective Date: N/A
Calc. Book No.: N/A
Baseline Report Date: N/A

Standard Detail No.
P-628

Plot Date: 2/11/2013 6:37:19 AM Filename: S:_JL_Design\T00121 - 50's Bikeway Woodstock Blvd-Thompson St, SE-NE\CAD\PLAN_SHEETS\SHT P-628 PORTLAND STANDARD DRAWING\PLOT_SHT_ P-628.dgn
Plot Date: 1/13/2011 12:42:54 PM Filename: \\pdotnt\sstation\DETAILS\Standard Details\Traffic Signal Details\P-628 Span Wire Equipment Installation Details.dgn
11x17 PRINT SCALE: $SCALE$

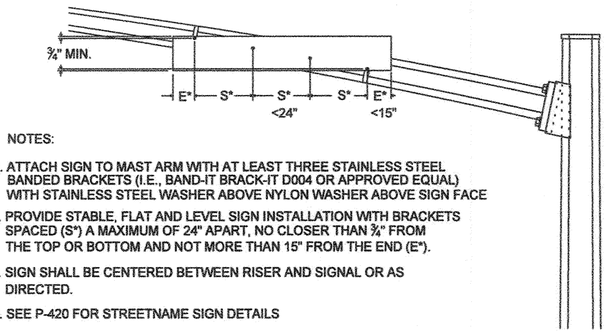

NOTES:

1. ATTACH SIGN TO MAST ARM WITH AT LEAST THREE STAINLESS STEEL BANDED BRACKETS (I.E., BAND-IT BRACK-IT D004 OR APPROVED EQUAL) WITH STAINLESS STEEL WASHER ABOVE NYLON WASHER ABOVE SIGN FACE
2. PROVIDE STABLE, FLAT AND LEVEL SIGN INSTALLATION WITH BRACKETS SPACED (S*) A MAXIMUM OF 24" APART, NO CLOSER THAN ¾" FROM THE TOP OR BOTTOM AND NOT MORE THAN 15" FROM THE END (E*).
3. SIGN SHALL BE CENTERED BETWEEN RISER AND SIGNAL OR AS DIRECTED.
4. SEE P-420 FOR STREETNAME SIGN DETAILS

OVERHEAD STREET NAME SIGN MOUNTING DETAIL

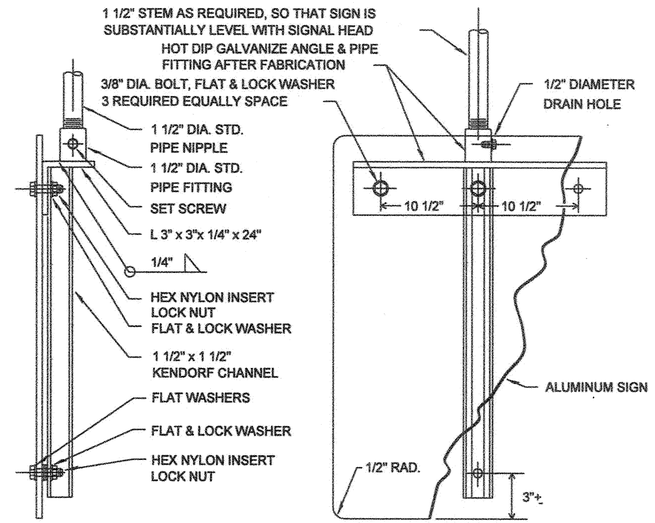

SIDE VIEW

FRONT VIEW

NOTE :

ALL BOLTS, NUTS, WASHERS & SET SCREWS SHALL BE STAINLESS STEEL.

ALUMINUM SIGN MAST ARM MOUNTING DETAIL

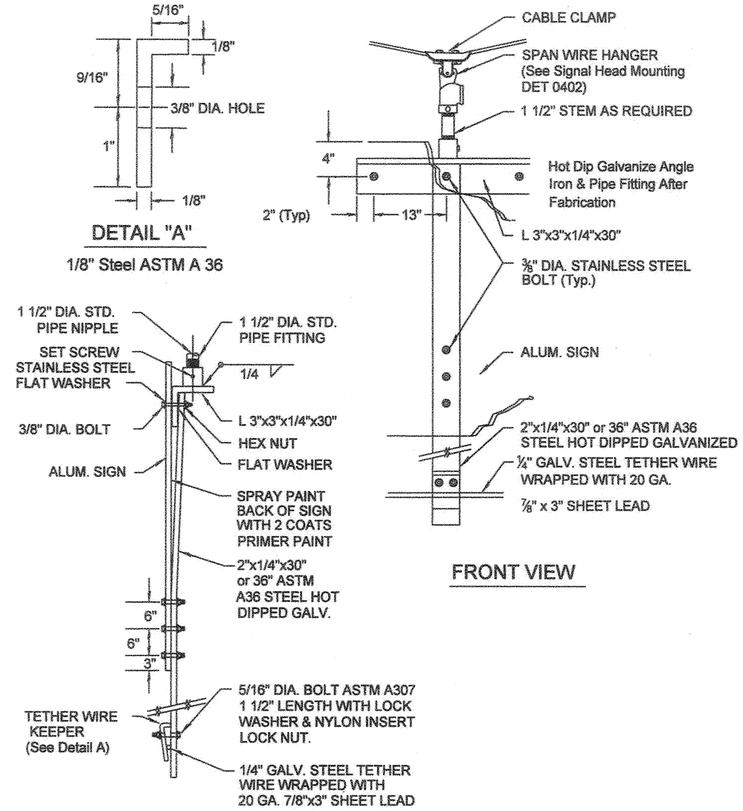

SIDE VIEW

ALUMINUM SIGN SPANWIRE MOUNTING DETAIL

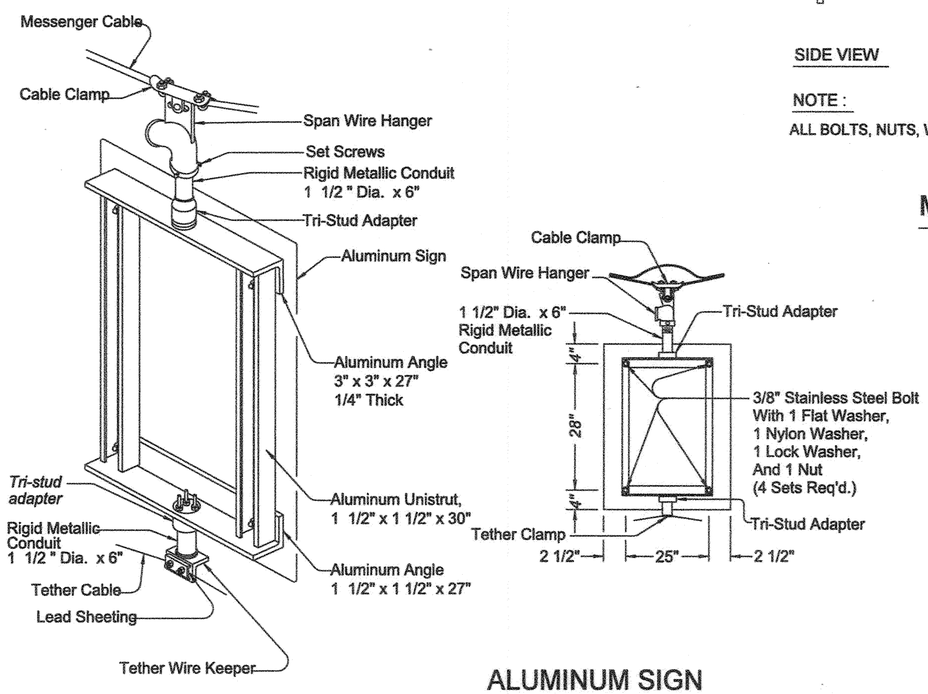

ALUMINUM SIGN ODOT SPANWIRE MOUNTING DETAIL (SEE ODOT STD DWG TM465)

NOT TO SCALE

The selection and use of this Standard Detail, while designed in accordance with generally accepted engineering principles and practices, is the sole responsibility of the user.

BUREAU OF TRANSPORTATION
CITY OF PORTLAND, OREGON
Steve Iverson
Chief Engineer

Standard Detail Title

OVERHEAD STREET NAME AND ALUMINUM SIGN MOUNTING DETAILS

Note:
All material and workmanship shall be in accordance with the City of Portland Standard Construction Specifications.

Effective Date: N/A

Calc. Book No.: N/A

Baseline Report Date: N/A

Standard Detail No.

P-629

Plot Date: 3/11/2011 2:05:20 PM Filename: T:\DETAILS\Standard Details\Traffic Signal Details\P-629 Overhead Sign Details, Rev 3-11-11.dgn
Plot Date: 2/11/2013 6:38:01 AM Filename: S:_II_Design\T00121 - 50's Bikeway Woodstock Blvd-Thompson St, SE-NE\CAD\PLAN_SHEETS\SHT P-629 PORTLAND STANDARD DRAWING\PLOT_SHT_ P-629.dgn
11x17 PRINT SCALE: 1.0000' / in.

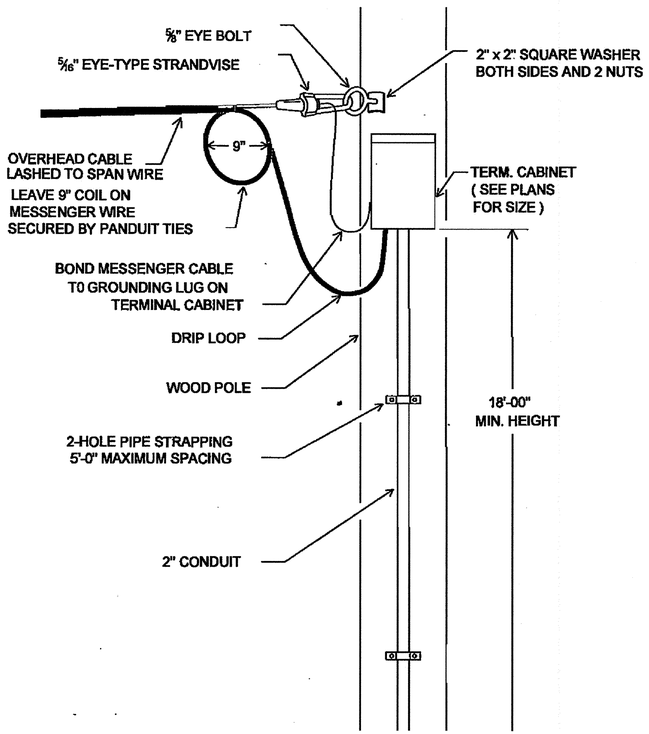

OVERHEAD CABLE CONNECTION
TO TERMINAL CABINET ON WOOD POLE

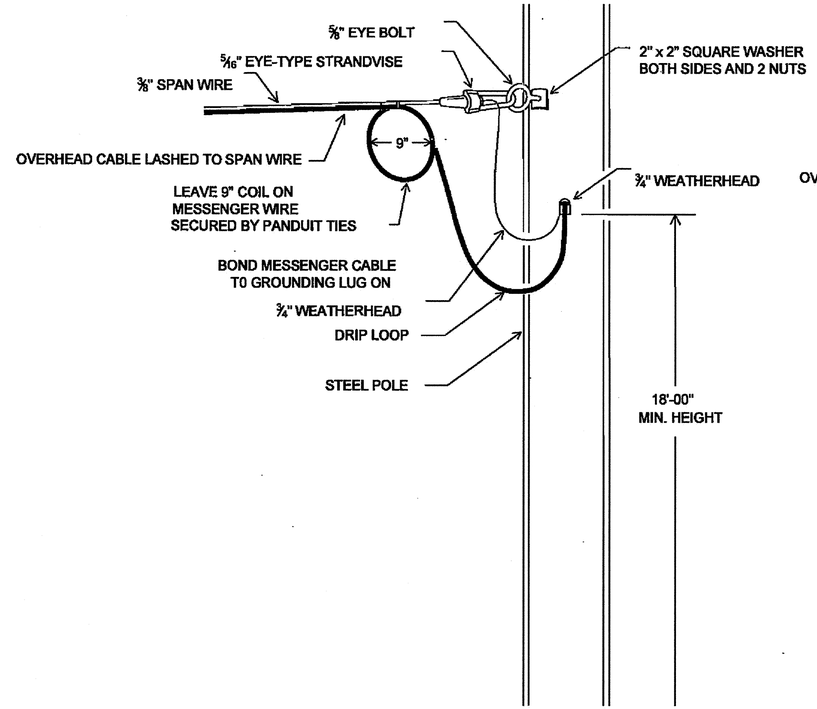

OVERHEAD CABLE CONNECTION TO
WEATHERHEAD ON STEEL POLE

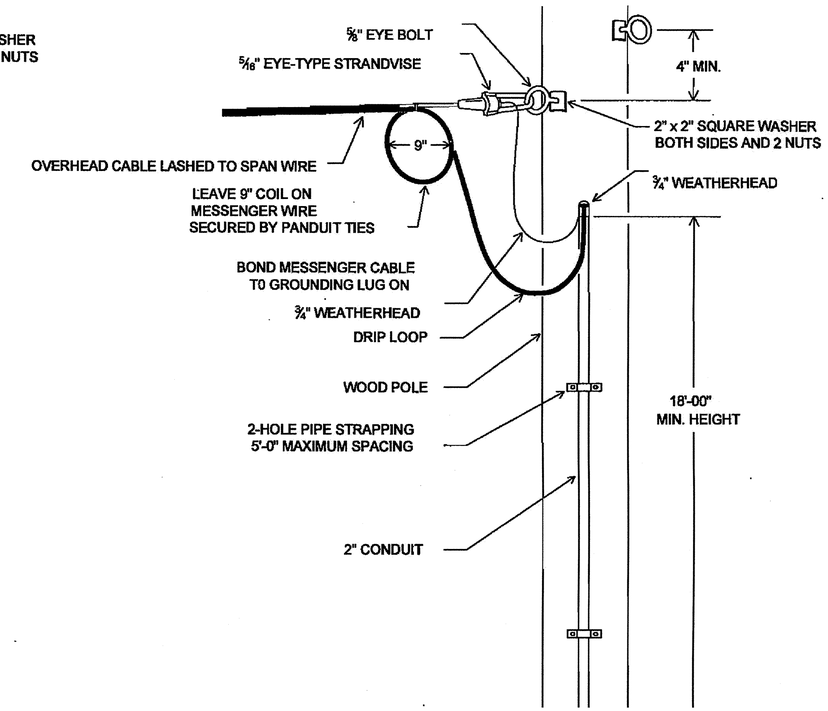

OVERHEAD CABLE CONNECTION TO
WEATHERHEAD ON WOOD POLE

NOT TO SCALE

The selection and use of this Standard Detail, while designed in accordance with generally accepted engineering principles and practices, is the sole responsibility of the user.

BUREAU OF TRANSPORTATION
CITY OF PORTLAND, OREGON
Steve Iourman
Chief Engineer

Standard Detail Title

OVERHEAD CABLE
POLE CONNECTION
DETAILS

Note:
All material and workmanship shall be in accordance with the City of Portland Standard Construction Specifications.

Effective Date: N/A
Calc. Book No.: N/A
Baseline Report Date: N/A

Standard Detail No.
P-630

Plot Date: 1/13/2011 12:44:12 PM Filename: \\pdcshituastation\DETAIL-St\Standard Details\Traffic Signal Details\P-630 Overhead Cable Connection Details.dgn
11x17 PRINT SCALE: $SCALE$
Plot Date: 2/11/2013 6:40:43 AM Filename: S:_IL_Design\T0012L- 50's Bikeway Woodstock Blvd-Thompson St, SE-NE\CAD\PLAN_SHEETS\SHT P-630 PORTLAND STANDARD DRAWING\PLOT_SHT_ P-630.dgn

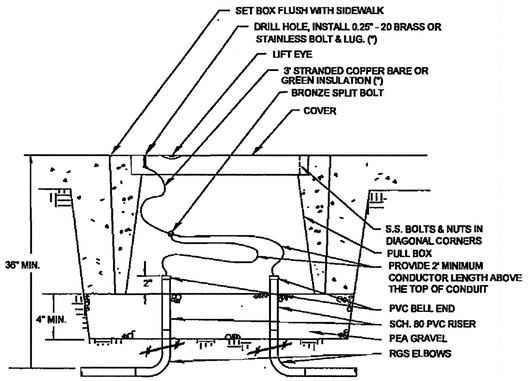

CONDUIT SIZES & NUMBERS AS REQUIRED
(*) POLYMER LIDS SHALL NOT BE BONDED

SIDEWALK PULL-BOX TYPICAL INSTALLATION

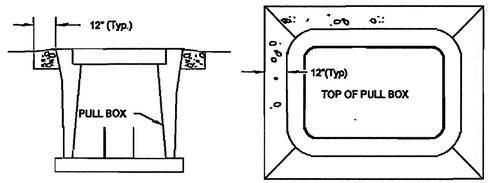

SIDE VIEW

TOP VIEW

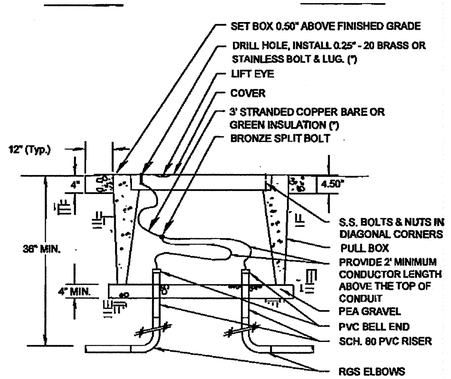

(*) POLYMER LIDS SHALL NOT BE BONDED
CONDUIT SIZES & NUMBERS AS REQUIRED

PULL-BOX OUTSIDE OF SIDEWALK TYPICAL INSTALLATION

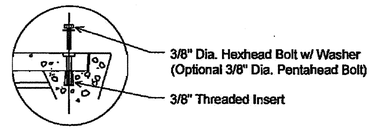

COVER DETAIL

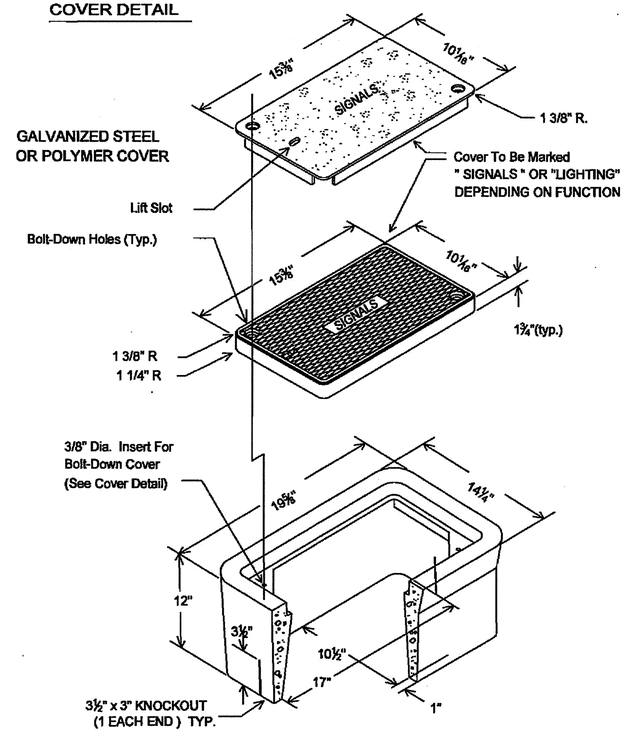

TYPE "A" PULL BOX

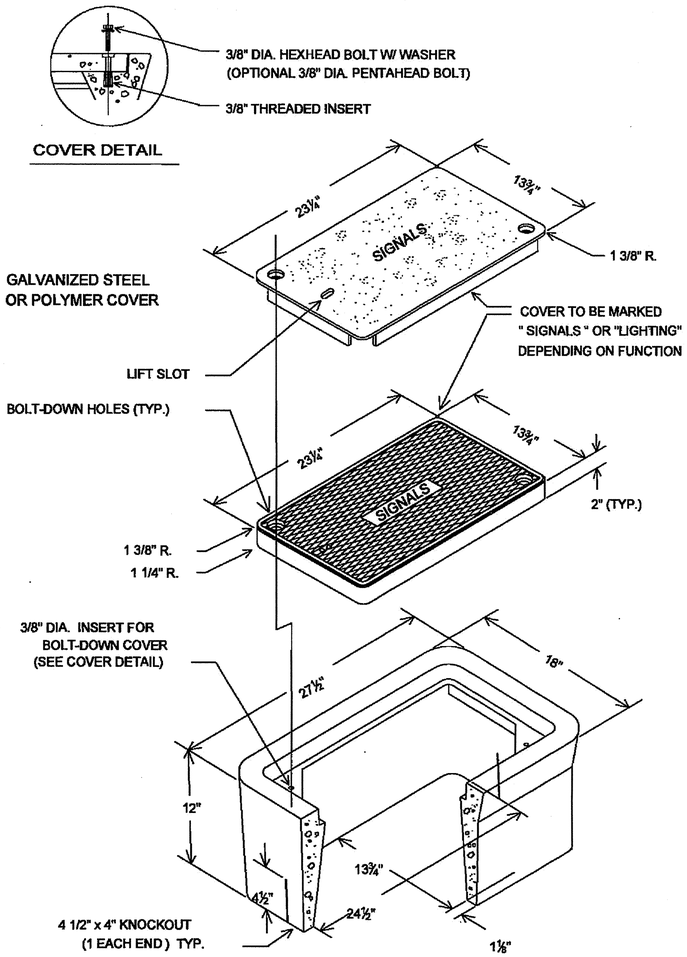

TYPE "B" PULL BOX

NOT TO SCALE

The selection and use of this Standard Detail, while designed in accordance with generally accepted engineering principles and practices, is the sole responsibility of the user.

BUREAU OF TRANSPORTATION
CITY OF PORTLAND, OREGON
Steve Iorenson
Chief Engineer

Standard Detail Title

PULL BOX
TYPE A & B
DETAILS

Note:
All material and workmanship shall be in accordance with the City of Portland Standard Construction Specifications.

Effective Date: N/A
Calc. Book No.: N/A
Baseline Report Date: N/A

Standard Detail No.
P-632

Plot Date: 1/13/2011 12:42:44 PM Filename: \\pdotnt\station\DETAILS\Standard Details\Traffic Signal Details\P-632 Type A & B Pull Boxes.dgn
Plot Date: 2/11/2013 6:41:35 AM Filename: S:_II_Design\T00121 - 50's Bikeway Woodstock Blvd-Thompson St, SE-NE\CAD\PLAN_SHEETS\SHT P-632 PORTLAND STANDARD DRAWING\PLOT_SHT_ P-632.dgn
11x17 PRINT SCALE: $SCALE$

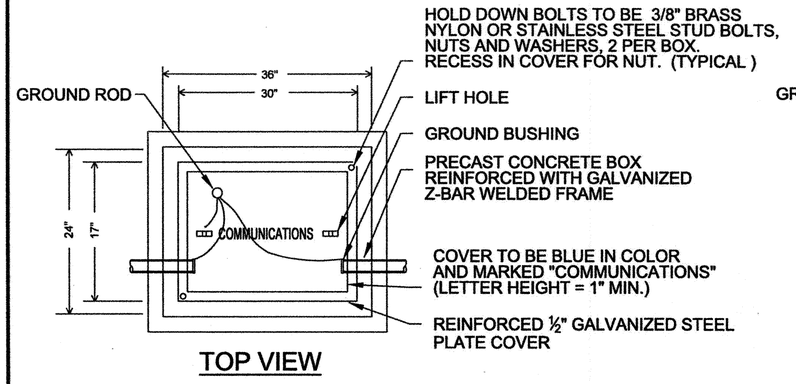

TOP VIEW

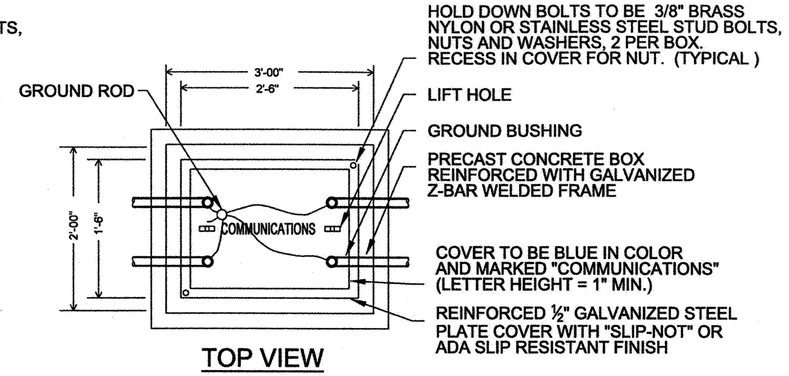

TOP VIEW

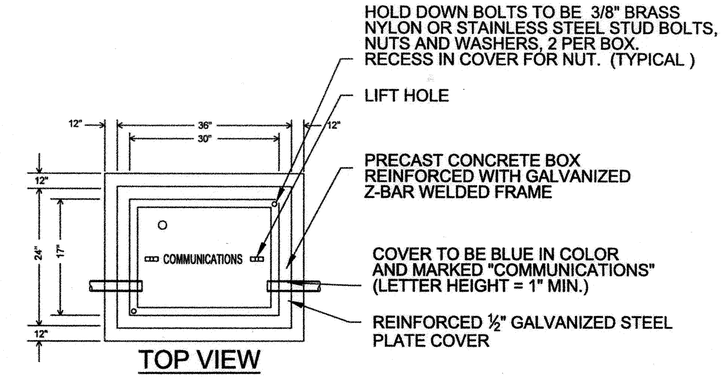

TOP VIEW

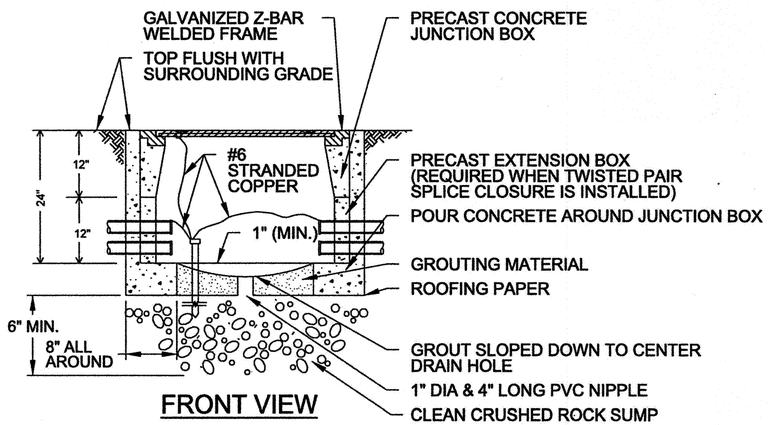

FRONT VIEW

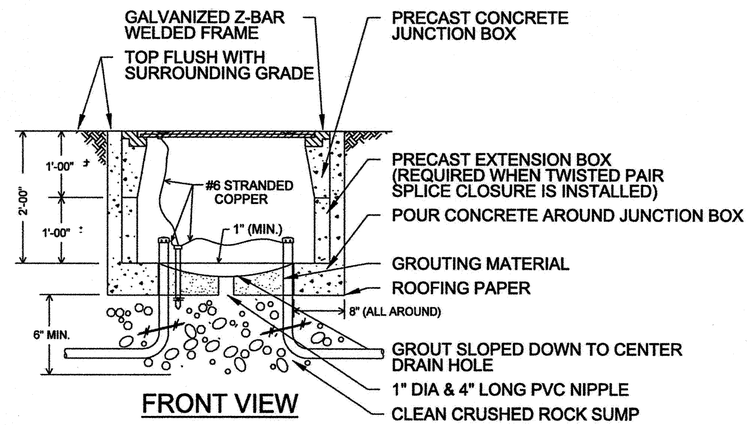

FRONT VIEW

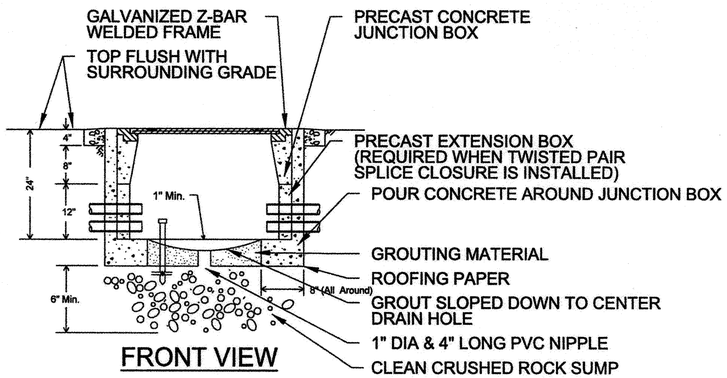

FRONT VIEW

COMMUNICATIONS JUNCTION BOX TYPE "C" PULL-BOX OUTSIDE OF SIDEWALK TYPICAL INSTALLATION

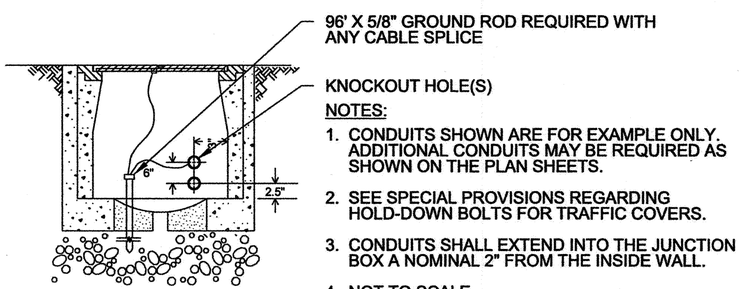

LEFT VIEW

NOTES:

1. CONDUITS SHOWN ARE FOR EXAMPLE ONLY. ADDITIONAL CONDUITS MAY BE REQUIRED AS SHOWN ON THE PLAN SHEETS.
2. SEE SPECIAL PROVISIONS REGARDING HOLD-DOWN BOLTS FOR TRAFFIC COVERS.
3. CONDUITS SHALL EXTEND INTO THE JUNCTION BOX A NOMINAL 2" FROM THE INSIDE WALL.
4. NOT TO SCALE.

COMMUNICATIONS JUNCTION BOX TYPE "C"

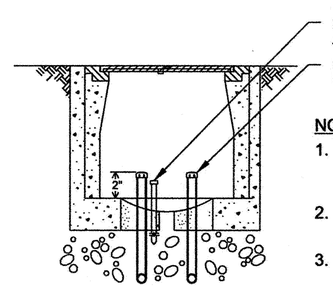

LEFT VIEW

NOTES:

1. CONDUITS SHOWN ARE FOR EXAMPLE ONLY. ADDITIONAL CONDUITS MAY BE REQUIRED AS SHOWN ON THE PLAN SHEETS.
2. SEE SPECIAL PROVISIONS REGARDING HOLD-DOWN BOLTS FOR TRAFFIC COVERS.
3. CONDUITS SHALL EXTEND INTO THE JUNCTION BOX A NOMINAL 2" FROM THE INSIDE WALL.
4. NOT TO SCALE.

COMMUNICATIONS JUNCTION BOX TYPE "D"

The selection and use of this Standard Drawing, while designed in accordance with generally accepted engineering principles and practices, is the sole responsibility of the user.

Note:
All material and workmanship shall be in accordance with the City of Portland Standard Construction Specifications.

BUREAU OF TRANSPORTATION
CITY OF PORTLAND, OREGON
Chief Engineer

Standard Drawing Title
COMMUNICATIONS BOX TYPE C & D DETAILS

Effective Date: 03-21-12
Calc. Book No.:
Baseline Report Date:

Standard Drawing No.
P-633

Plot Date: 2/11/2013 6:42:29 AM Filename: S:_ILDesign\T00121- 50's Bikeway Woodstock Blvd-Thompson St, SE-NE\CAD\PLAN_SHEETS\SHT P-633 PORTLAND STANDARD DRAWING\PLOT_SHT_ P-633.dgn
Plot Date: 3/22/2012 4:38:45 PM

SINGLE LOOP

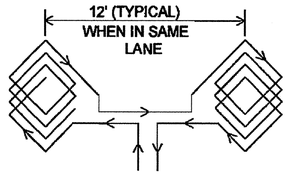

TWO LOOPS IN SERIES

ARROWS INDICATE DIRECTION OF LOOP WINDING.

NOT TO SCALE

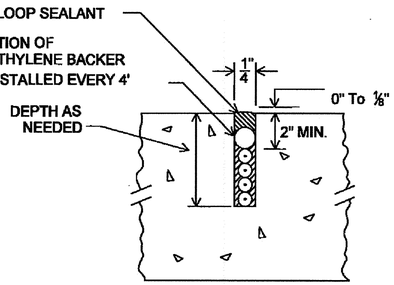

LOOP SECTION

NOTE: LOOPS SHALL BE 4'x4' DIAMOND OR 6' ROUND WITH 4 TURNS OF NO. 14 WIRE, PER 00990.43 (b) 2 CENTERED IN THE LANE. THE FEEDER WIRES SHALL RUN BACK TO A PULL BOX, POLE BASE, OR CONTROLLER BASE AS SHOWN ON THE PLANS.HOME RUNS SHALL HAVE SIX TWIST PER FOOT.

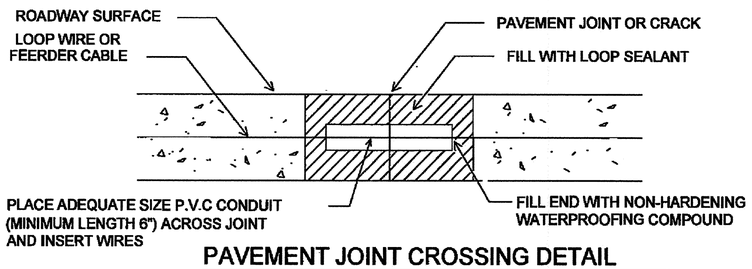

PAVEMENT JOINT CROSSING DETAIL

(FOR CONCRETE OR A.C. PAVEMENT)

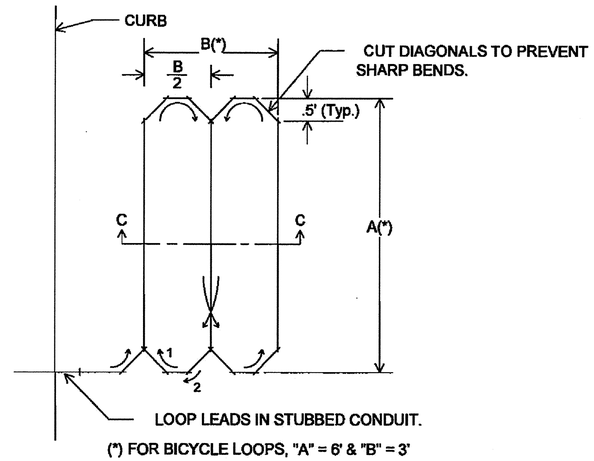

(*) FOR BICYCLE LOOPS, "A" = 6' & "B" = 3'
FOR OTHER QUADRAPOLE LOOPS OBTAIN DISTANCES "A" AND "B" FROM SIGNAL PLAN

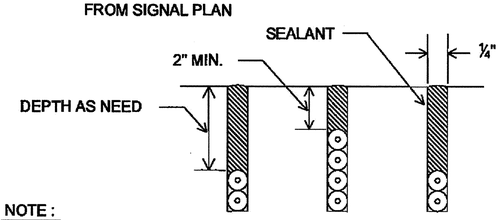

SECTION C-C

NOTE :
TAMP WIRE INTO SAWSLOTS WITH WOOD OR PLASTIC TOOL. TWO (2) TURNS OF WIRE.

QUADRAPOLE & BICYCLE DETECTOR LOOP INSTALLATION

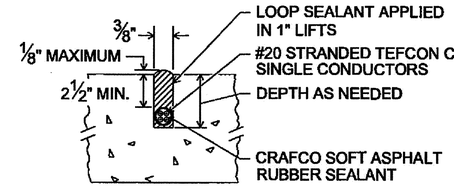

LOOP SECTION

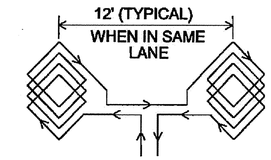

TWO LOOP IN SERIES

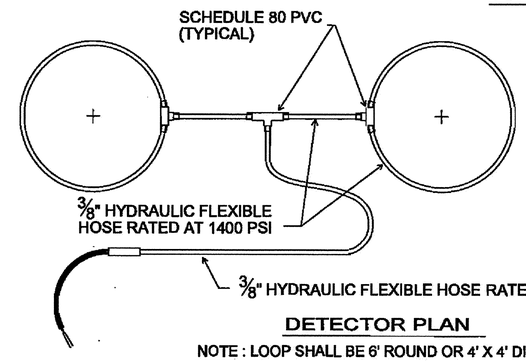

DETECTOR PLAN

NOTE : LOOP SHALL BE 6' ROUND OR 4' X 4' DIAMOND

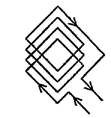

SINGLE LOOP

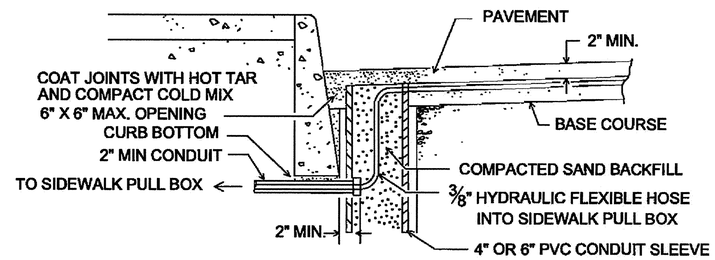

CROSS SECTION

NOTE : INSTALL PVC SLEEVE LOOP POCKET PER DETAIL THIS SHEET.

PREFORMED DETECTOR LOOP

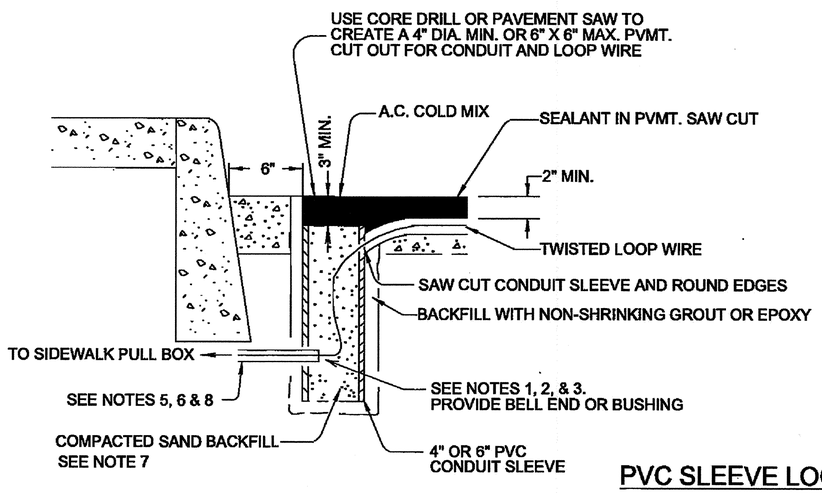

PVC SLEEVE LOOP POCKET DETAIL

LOOP POCKET INSTALLATION NOTES

1. Bell End or Bushing Shall Be Provided At Ends Of Conduit.
2. Tag Wire 3" On Each Side Of Bell Ends or Bushings.
3. Install Duct Seal Compound To Each End Of Conduit Before Installing Sand And A.C.
4. Round All Sharp Edges Where Wire Passes PVC Sleeve.
5. Install 2" Minimum Conduit, 2 1/2 " For More Than 10 Ducted Wires And 3" For More Than 16 #14 Ducted Loop Conductors.
6. Route Conduit Perpendicular to Pull Box and Below Curb.
7. Backfill Pothole W/Fine Sand To Within 3" Of Roadway Surface Backfill Remainder W/Cold Mix Asphalt. Saw Cuts At Edge Of Pothole Shall Be 4" Deep. Conductors Shall Be Sealed With Bituminous Adhesive Sealant In Sawcuts And Covered W/Sand In The Pothole Prior To Installing Cold Mix Asphalt.
8. Elbows And Risers For Conduit Back Into The First Junction Box Shall Be Rigid PVC Conduit.
9. On Monolithic Curbs, Locate Loop Pocket In Pavement At Edge of Gutter. Loop Pocket May Be Centered in Concrete Gutters.

STANDARD DETECTOR LOOP & LOOP POCKET INSTALLATION

The selection and use of this Standard Detail, while designed in accordance with generally accepted engineering principles and practices, is the sole responsibility of the user.

BUREAU OF TRANSPORTATION
CITY OF PORTLAND, OREGON
Steve Iourman
Chief Engineer

Standard Detail Title

DETECTOR LOOP & LOOP POCKET DETAILS

Note:
All material and workmanship shall be in accordance with the City of Portland Standard Construction Specifications.

Effective Date: N/A
Calc. Book No.: N/A
Baseline Report Date: N/A

Standard Detail No.
P-634

Plot Date: 1/13/2011 12:43:35 PM Filename: \\pdcintustation\DETAILS\Standard Details\Traffic Signal Details\P-634 Detector Loop Details.dgn
Plot Date: 2/11/2013 6:43:11 AM Filename: S:_II_Design\T00121- 50's Bikeway Woodstock Blvd-Thompson St, SE-NE\CAD\PLAN_SHEETS\SHT P-634 PORTLAND STANDARD DRAWING\PLOT_SHT_ P-634.dgn
11x17 PRINT SCALE: $SCALE$

NOTES :

1.- Preferred Distance From Top Of Pole To Bolt Hole Is 10". But Not Less Than 4".
2.- Check Bonding Requirements.

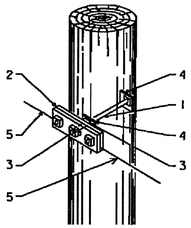

ITEM	DESCRIPTION	QTY.
1	5/8 Machine Bolt	1
2	Suspension Clamp	1
3	Square Nut	2
4	Square Washer	2
5	5/16" Strand	

ASSEMBLED VIEW

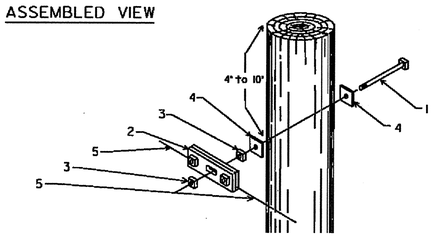

NOT TO SCALE

EXPLODED VIEW

POLE FRAMING STRAIGHT-LINE POLE

STANDARD DWG. NO. D-862
REV. 3/3/2010

ITEM	DESCRIPTION	QTY.
1	5/8 Machine Bolt	1
2	Suspension Clamp	1
3	Square Nut	2
4	Square Washer	1
5	Guy Attachment	1
6	5/16" Pre-Form Dead End	
7	5/16" Strand	2
8	5/16" Guy Strand	2
9	Bonding Clamp	

NOT TO SCALE

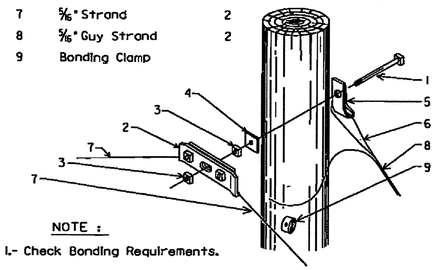

NOTE :

1.- Check Bonding Requirements.

EXPLODED VIEW

POLE FRAMING ANGLE POLE

STANDARD DWG. NO. D-863
REV. 3/3/2010

ITEM	DESCRIPTION	QTY.
1	Thimble Eye Bolt	1
2	5/16" Pre-Form Dead End	1
3	Square Nut	1
4	Square Washer	1
5	Guy Attachment	1
6	5/16" Messenger Strand	
7	Galv. Staples	
8	5/16" Guy Strand	

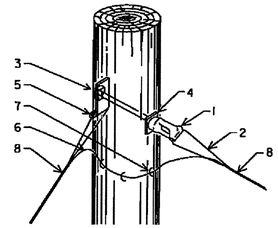

ASSEMBLED VIEW

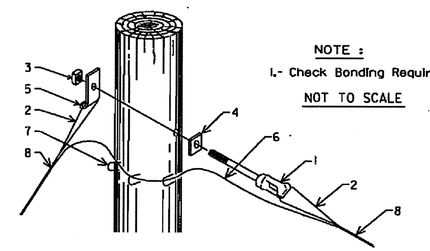

NOTE :

1.- Check Bonding Requirements.

NOT TO SCALE

EXPLODED VIEW

POLE FRAMING DEAD-END POLE WITH GUY

STANDARD DWG. NO. D-864
REV. 3/3/2010

ITEM	DESCRIPTION	QTY.
1	Thimble Eye Bolt	
2	5/16" Pre-Form Dead End	
3	Square Nut	
4	Square Washer	
5	Guy Attachment	
6	5/16" Messenger Strand	
7	Galv. Staples	
8	5/16" Guy Strand	
9	Bonding Clamp	

NOTE :

1.- Check Bonding Requirements.

NOT TO SCALE

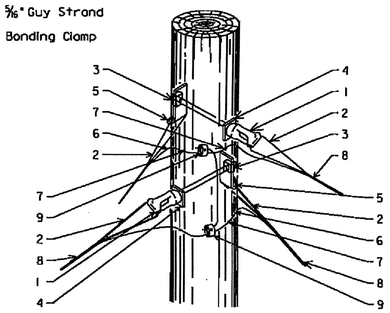

ASSEMBLED VIEW

POLE FRAMING DOUBLE DEAD-END WITH GUYS

STANDARD DWG. NO. D-865
REV. 3/3/2010

ITEM	DESCRIPTION	QTY.
1	Thimble Eye Bolt	
2	Angle Suspension Clamp	
3	Square Nut	
4	Square Washer	
5	Guy Attachment	
6	5/16" Pre-Form Dead End	
7	Bonding Clamp	
8	Galv. Staples	
9	5/16" Strand	
10	5/16" Guy Strand	

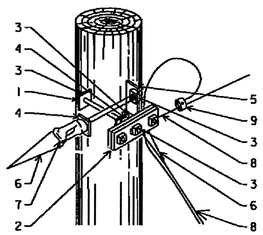

ASSEMBLED VIEW

NOTES :

1.- Minimum of 4" Vertical Separation Between Bolt Holes.
2.- Check Bonding Requirements.

NOT TO SCALE

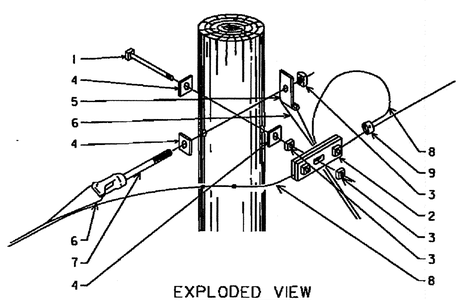

EXPLODED VIEW

POLE FRAMING FALSE DEAD-END POLE

STANDARD DWG. NO. D-866
REV. 3/3/2010

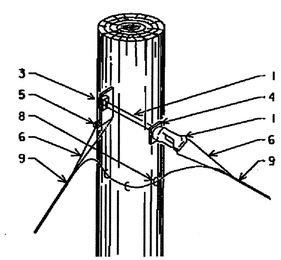

ASSEMBLED VIEW

NOT TO SCALE

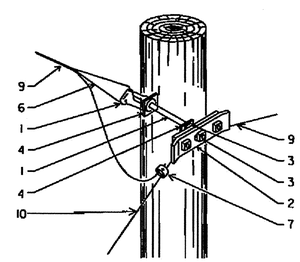

NOTE :

1.- Check Bonding Requirements.

ASSEMBLED VIEW

POLE FRAMING OVERHEAD GUY

STANDARD DWG. NO. D-867
REV. 3/3/2010

NOT TO SCALE

The selection and use of this Standard Detail, while designed in accordance with generally accepted engineering principles and practices, is the sole responsibility of the user.

BUREAU OF TRANSPORTATION
CITY OF PORTLAND, OREGON
Steve Iverson
Chief Engineer

Standard Detail Title

CABLE PLACEMENT AND WOOD POLE FRAMING DETAILS (1 0F 3)

Note:
All material and workmanship shall be in accordance with the City of Portland Standard Construction Specifications.

Effective Date: N/A
Calc. Book No.: N/A
Baseline Report Date: N/A

Standard Detail No.
P-635

Plot Date: 1/13/2011 12:46:59 PM Filename: \\odotnfuelation\DETAILS\Standard Details\Traffic Signal Details\P-635 Cable Placement and Wood Pole Framing Details (1 OF 3).dgn
Plot Date: 2/11/2013 6:43:59 AM Filename: S:_IL Design\T00121- 50's Bikeway Woodstock Blvd-Thompson St, SE-NE\CAD\PLAN_SHEETS\SHT P-635 PORTLAND STANDARD DRAWING\PLOT_SHT_ P-635.dgn
11x17 PRINT SCALE: $SCALE$

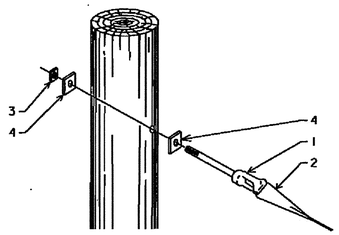

EXPLODED VIEW

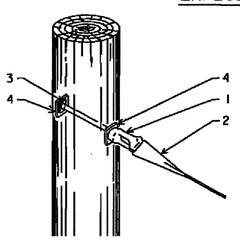

ASSEMBLED VIEW

ITEM	DESCRIPTION
1	Thimble Eye Bolt
2	5/16" Pre-Form Dead End
3	Square Nut
4	Square Washer

NOT TO SCALE

NOTE :
1.- Check Bonding Requirements.

POLE FRAMING
SLACK-SPAN DEAD-END

STANDARD DWG. NO. D-868
REV. 3/3/2010

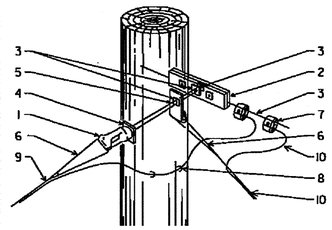

ASSEMBLED VIEW

ITEM	DESCRIPTION
1	Thimble Eye Bolt
2	Suspension Clamp
3	Square Nut
4	Square Washer
5	Guy Attachment
6	5/16" Pre-Form Dead End
7	Bonding Clamp
8	Galv. Staples
9	5/16" Strand
10	5/16" Guy Strand

NOT TO SCALE

NOTE :
1.- Check Bonding Requirements.

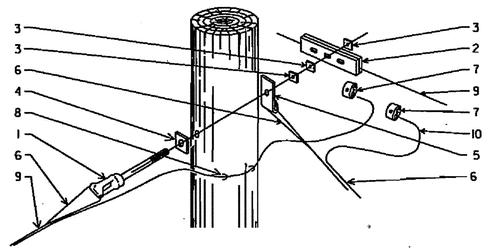

EXPLODED VIEW

POLE FRAMING
LINE POLE DEAD-END
COMBINATION No. 1

STANDARD DWG. NO. D-869
REV. 3/3/2010

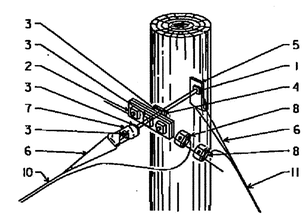

ASSEMBLED VIEW

ITEM	DESCRIPTION
1	5/8 Machine Bolt
2	Suspension Clamp
3	Square Nut
4	Square Washer
5	Guy Attachment
6	5/16" Pre-Form Dead End
7	Eye Nut
8	Bonding Clamp
9	Galv. Staples
10	5/16" Strand
11	5/16" Guy Strand

NOTE :
1.- Check Bonding Requirements.

NOT TO SCALE

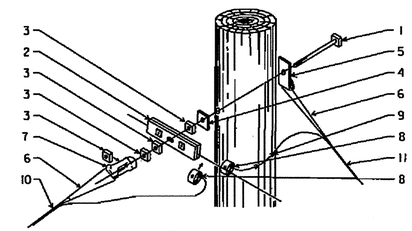

EXPLODED VIEW

POLE FRAMING
DEAD-END COMBINATION No.2

STANDARD DWG. NO. D-870
REV. 3/3/2010

NOTE :
1.- Check Bonding Requirements.

NOT TO SCALE

ITEM	DESCRIPTION
1	5/8 Machine Bolt
2	Suspension Clamp
3	Square Nut
4	Square Washer
5	1/2" x 3 1/2" Machine Bolt
6	5/16" Strand
7	Suspension Clamp (2 holes)

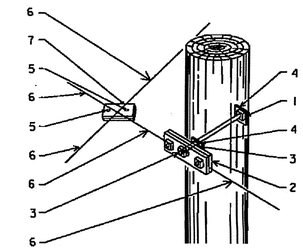

ASSEMBLED VIEW

POLE FRAMING
CROSS - OVER POLE

STANDARD DWG. NO. D-871
REV. 3/3/2010

ITEM	DESCRIPTION
1	5/8 Machine Bolt
2	Suspension Clamp
3	Square Nut
4	Square Washer
5	Carriage Arm Brace
6	1/2" x 3" Lag Screw
7	Wood Arm
8	5/16" Strand
9	Carriage Bolt With Washer (round)

NOTE :
1. Check Bonding Requirements.

NOT TO SCALE

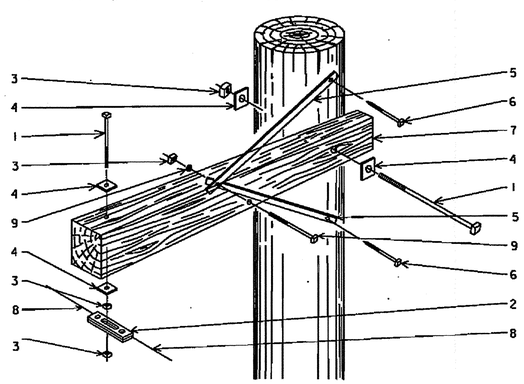

EXPLODED VIEW

POLE FRAMING
WOOD CROSS-ARM

STANDARD DWG. NO. D-872
REV. 3/3/2010

NOTE :
1.- Check Bonding Requirements.

NOT TO SCALE

ITEM	DESCRIPTION
1	5/8 Machine Bolt
2	Suspension Clamp
3	Square Nut
4	Square Washer
5	5/16" Strand
6	Metal Cross Arm
7	1/2" x 3" Lag Screw

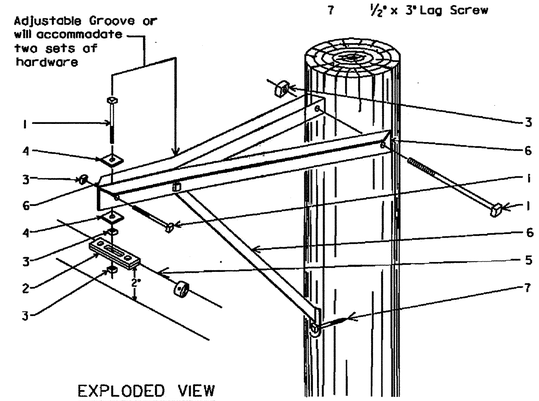

EXPLODED VIEW

CABLE PLACING
ADJUSTABLE EXTENSION ARM

STANDARD DWG. NO. D-873
REV. 3/3/2010

NOT TO SCALE

The selection and use of this Standard Detail, while designed in accordance with generally accepted engineering principles and practices, is the sole responsibility of the user.

BUREAU OF TRANSPORTATION
CITY OF PORTLAND, OREGON
Steve Iourman
Chief Engineer

Standard Detail Title
CABLE PLACEMENT AND WOOD POLE FRAMING DETAILS (2 OF 3)

Note:
All material and workmanship shall be in accordance with the City of Portland Standard Construction Specifications.

Effective Date: N/A
Calc. Book No.: N/A
Baseline Report Date: N/A

Standard Detail No.
P-636

Plot Date: 2/11/2013 6:44:43 AM Filename: S:_ll_Design\T00121 - 50's Bikeway Woodstock Blvd-Thompson St, SE-NE\CAD\PLAN_SHEETS\SHT P-636 PORTLAND STANDARD DRAWING\PLOT_SHT_ P-636.dgn
Plot Date: 1/13/2011 12:47:12 PM Filename: \\pdotnfsuseation\DETAILS\Standard Details\Traffic Signal Details\P-636 Cable Placement and Wood Pole Framing Details (2 of 3).dgn
11x17 PRINT SCALE: $SCALE$

NOT TO SCALE

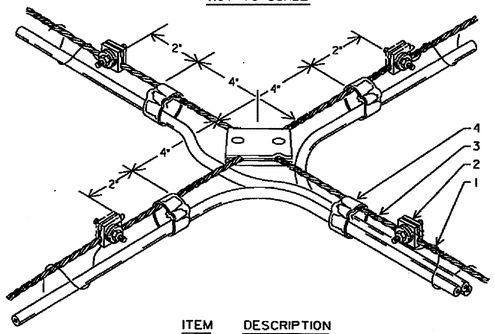

ITEM	DESCRIPTION
1	0.045 Stainless Steel Lashing Wire
2	Lashing Wire Clamps
3	Cable Spacer
4	Cable Support Straps

NOTE :
Check Bonding Requirement

CABLE PLACING
MID-SPAN CROSS-OVER

STANDARD DWG. NO. D-888
REV. 3/3/2010

ITEM	DESCRIPTION
1	0.045 Stainless Steel Lashing Wire
2	Lashing Wire Clamps
3	Cable Spacer
4	Cable Support Straps
5	Bonding Clamp
6	Bonding Wire

NOT TO SCALE

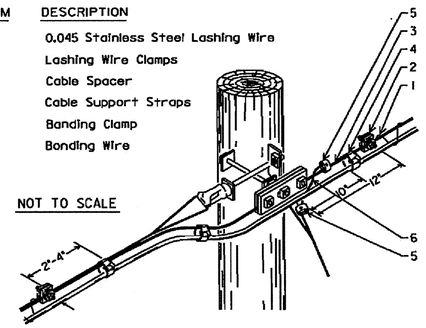

MAP LEGEND

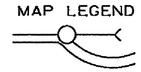

NOTE :
Check Bonding Requirement

CABLE PLACING
FALSE DEAD-END

STANDARD DWG. NO. D-889
REV. 3/3/2010

NOT TO SCALE

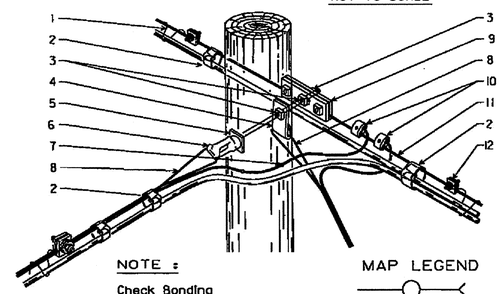

NOTE :
Check Bonding Requirement

MAP LEGEND

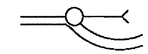

ITEM	DESCRIPTION	ITEM	DESCRIPTION
1	0.045 Stainless Steel Wire	7	Galv. Staples
2	Cable Support Straps	8	5/8" Pre-Form Dead End
3	Square Nut	9	Suspension Clamp
4	Guy Attachment	10	Bonding Clamp
5	Square Washer	11	Cable Spacer
6	Thimble Eye Bolt	12	Lashing Wire Clamps

CABLE PLACING
LINE POLE DEAD-END COMBINATION No. 1

STANDARD DWG. NO. D-890
REV. 3/3/2010

ITEM	DESCRIPTION
1	0.045 Stainless Steel Lashing Wire
2	Lashing Wire Clamps
3	Cable Spacer
4	Cable Support Straps
5	Bonding Clamp
6	Bonding Wire
7	Suspension Clamp

NOTE :
Check Bonding Requirement

NOT TO SCALE

MAP LEGEND

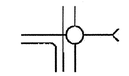

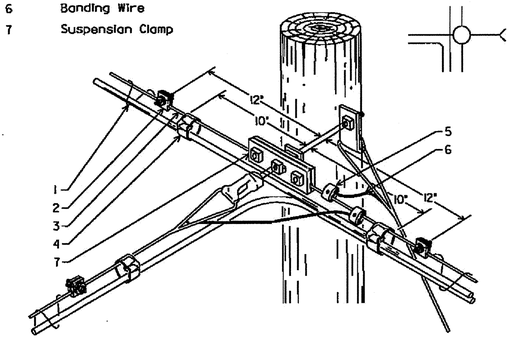

CABLE PLACING
LINE POLE DEAD-END COMBINATION No. 2

STANDARD DWG. NO. D-891
REV. 3/3/2010

ITEM	DESCRIPTION
1	0.045 Stainless Steel Lashing Wire
2	Lashing Wire Clamps
3	Cable Spacer
4	Cable Support Straps
5	Bonding Clamp
6	Bonding Wire
7	Suspension Clamp

NOTE :
Check Bonding Requirement

NOT TO SCALE

MAP LEGEND

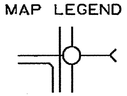

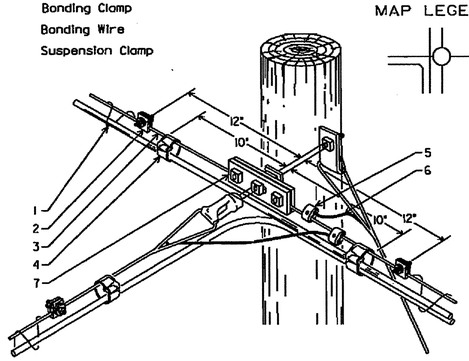

CABLE PLACING
LINE POLE DEAD-END COMBINATION No. 2

STANDARD DWG. NO. D-891
REV. 3/3/2010

ITEM	DESCRIPTION
1	0.045 Stainless Steel Lashing Wire
2	Lashing Wire Clamps
3	Cable Spacer
4	Cable Support Straps
5	Thimble Eye Bolt

NOTE :
Check Bonding Requirement

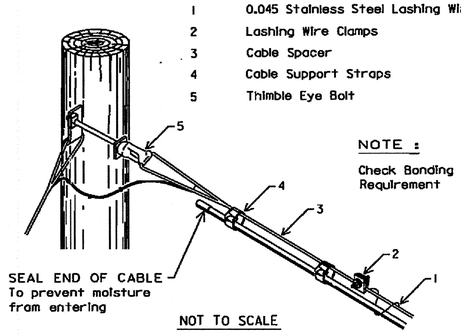

SEAL END OF CABLE
To prevent moisture from entering

NOT TO SCALE

CABLE PLACING
DEAD - END

STANDARD DWG. NO. D-893
REV. 3/3/2010

ITEM	DESCRIPTION
1	0.045 Stainless Steel Lashing Wire
2	Lashing Wire Clamps
3	Cable Spacer
4	Cable Support Straps

NOTE :
Check Bonding Requirement

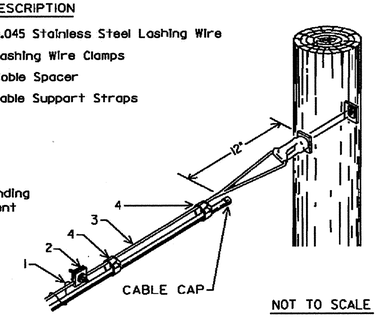

CABLE CAP

NOT TO SCALE

CABLE PLACING
SLACK-SPAN DEAD-END

STANDARD DWG. NO. D-894
REV. 3/3/2010

NOT TO SCALE

The selection and use of this Standard Detail, while designed in accordance with generally accepted engineering principles and practices, is the sole responsibility of the user.

BUREAU OF TRANSPORTATION
CITY OF PORTLAND, OREGON
Steve Iverson
Chief Engineer

Standard Detail Title
CABLE PLACEMENT AND WOOD POLE FRAMING DETAILS (3 0F 3)

Note:
All material and workmanship shall be in accordance with the City of Portland Standard Construction Specifications.

Effective Date: N/A
Calc. Book No.: N/A
Baseline Report Date: N/A

Standard Detail No.
P-637

Plot Date: 2/11/2013 6:45:37 AM Filename: S:_IL-Design\T00121 - 50's Bikeway Woodstock Blvd-Thompson St, SE-NE\CAD\PLAN_SHEETS\SHT P-637 PORTLAND STANDARD DRAWING\PLOT_SHT_ P-637.dgn
Plot Date: 1/13/2011 12:47:16 PM Filename: \\odotrlustation\DETAILS\Standard Details\Traffic Signal Details\P-637 Cable Placement and Wood Pole Framing Details (3 of 3).dgn
11x17 PRINT SCALE: $SCALE$

ITEM	DESCRIPTION
1	City Communication Line
2	5/16" Strand
3	Cable Support Straps
4	Lashing Wire Clamps
5	Fiber Cable
6	Telephone Cable

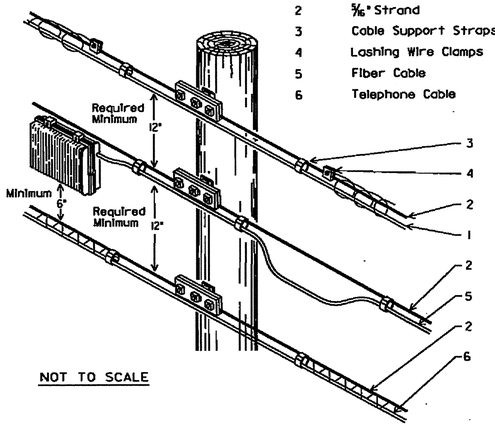

NOT TO SCALE

CLEARANCE
FIBER & TELEPHONE CABLE

STANDARD DWG. NO. D-874
REV. 2/10/2010

ITEM	DESCRIPTION
1	Power Primary
2	Power Secondary
3	Attachment
4	City Communication Line

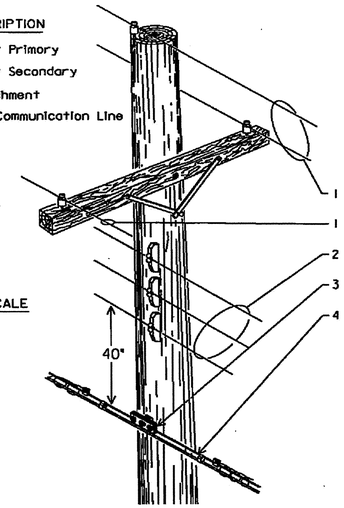

NOT TO SCALE

CLEARANCE
POWER SECONDARY
(0 To 750 Volts)

STANDARD DWG. NO. D-875
REV. 3/3/2010

NOTE
If neutral not effectively grounded clearance are the same as phone wire

NOTE
Voltages above 8700 volts A and B clearance increase to 60"

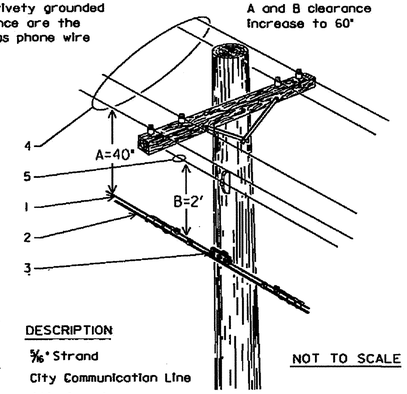

ITEM	DESCRIPTION
1	5/16" Strand
2	City Communication Line
3	Attachment
4	Power Primary (750 to 8700 Volts)
5	Effectively Grounded Neutral

NOT TO SCALE

CLEARANCE
POWER PRIMARY
(750 To 8700 Volts)

STANDARD DWG. NO. D-876
REV. 3/3/2010

ITEM	DESCRIPTION
1	City Communication Line
2	No 6 Copper Ground Wire
3	Secondary
4	Grounded Transformer
5	Primary 750 to 1500 volts

NOTE
If the transformer is not grounded, clearances increase to:
0 to 8700 volts = 40"
Over 8700 volts = 60"

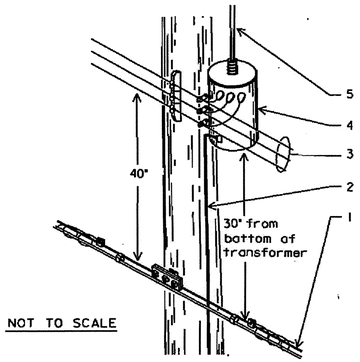

NOT TO SCALE

CLEARANCE
POWER TRANSFORMER
(Grounded)

STANDARD DWG. NO. D-878
REV. 3/3/2010

ITEM	DESCRIPTION
1	City Communication Line
2	Copper Ground Wire

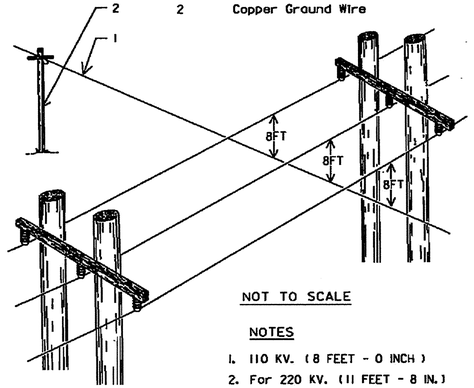

NOT TO SCALE

NOTES
1. 110 KV. (8 FEET - 0 INCH)
2. For 220 KV. (11 FEET - 8 IN.)

CLEARANCE
HIGH VOLTAGE UNDER CROSSING

STANDARD DWG. NO. D-879
REV. 3/3/2010

NOTE
Increases to 30" plus City communication Line sag if span is over 150 ft.

NOTE
Increases to 30" plus City communication Line sag or 45" whichever is greater for spans over 150 ft.

ITEM	DESCRIPTION
1	Line of Sight
2	0 to 8,700 volts
3	City Communication Line
4	0 to 8,700 volts
5	8,700 to 50,000 volts

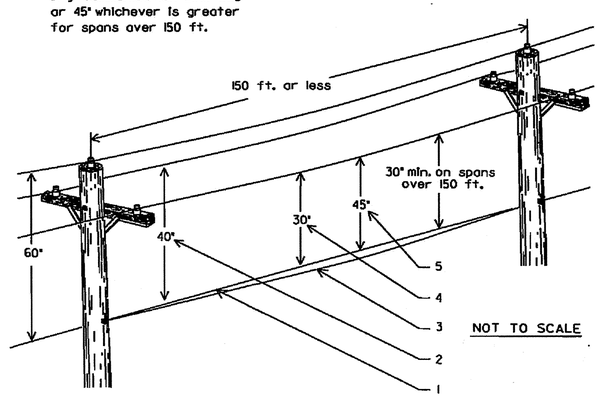

NOT TO SCALE

CLEARANCE
POWER PRIMARY MID-SPAN
(0 to 8700 volts & 8700 to 50000 volts)

STANDARD DWG. NO. D-877
REV. 3/3/2010

NOT TO SCALE

The selection and use of this Standard Detail, while designed in accordance with generally accepted engineering principles and practices, is the sole responsibility of the user.

BUREAU OF TRANSPORTATION
CITY OF PORTLAND, OREGON
Steve Iourmann
Chief Engineer

Standard Detail Title
CABLE PLACEMENT AND CLEARANCE DETAILS

Note:
All material and workmanship shall be in accordance with the City of Portland Standard Construction Specifications.

Effective Date: N/A
Calc. Book No.: N/A
Baseline Report Date: N/A

Standard Detail No.
P-638

Plot Date: 2/11/2013 6:46:24 AM Filename: S:_II_Design\T00121 - 50's Bikeway Woodstock Blvd-Thompson St, SE-NE\CAD\PLAN_SHEETS\SHT P-638 PORTLAND STANDARD DRAWING\PLOT_SHT_ P-638.dgn
Plot Date: 1/13/2011 12:47:19 PM Filename: \\pdxinfrastation\DETAILS\Standard Details\Traffic Signal Details\P-638 Cable Placement and Clearance Details.dgn
11x17 PRINT SCALE: $SCALE$

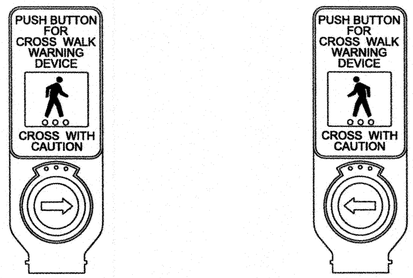

CROSSING SIGN DETAIL

(NOT TO SCALE)

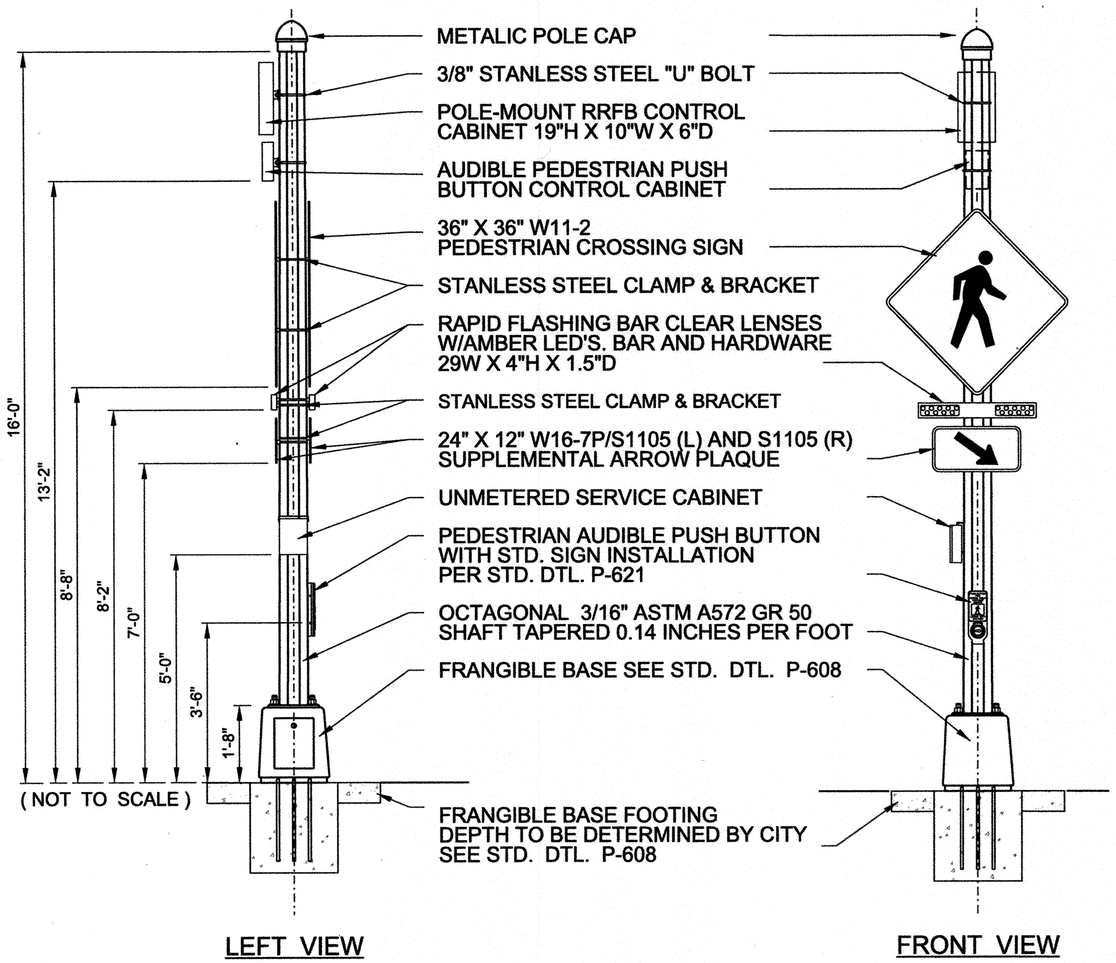

RECTANGULAR RAPID FLASH BEACON (AC POWERED) POLE ASSEMBLY DETAIL

(WITH CONTROLLER AND SERVICE CABINET)

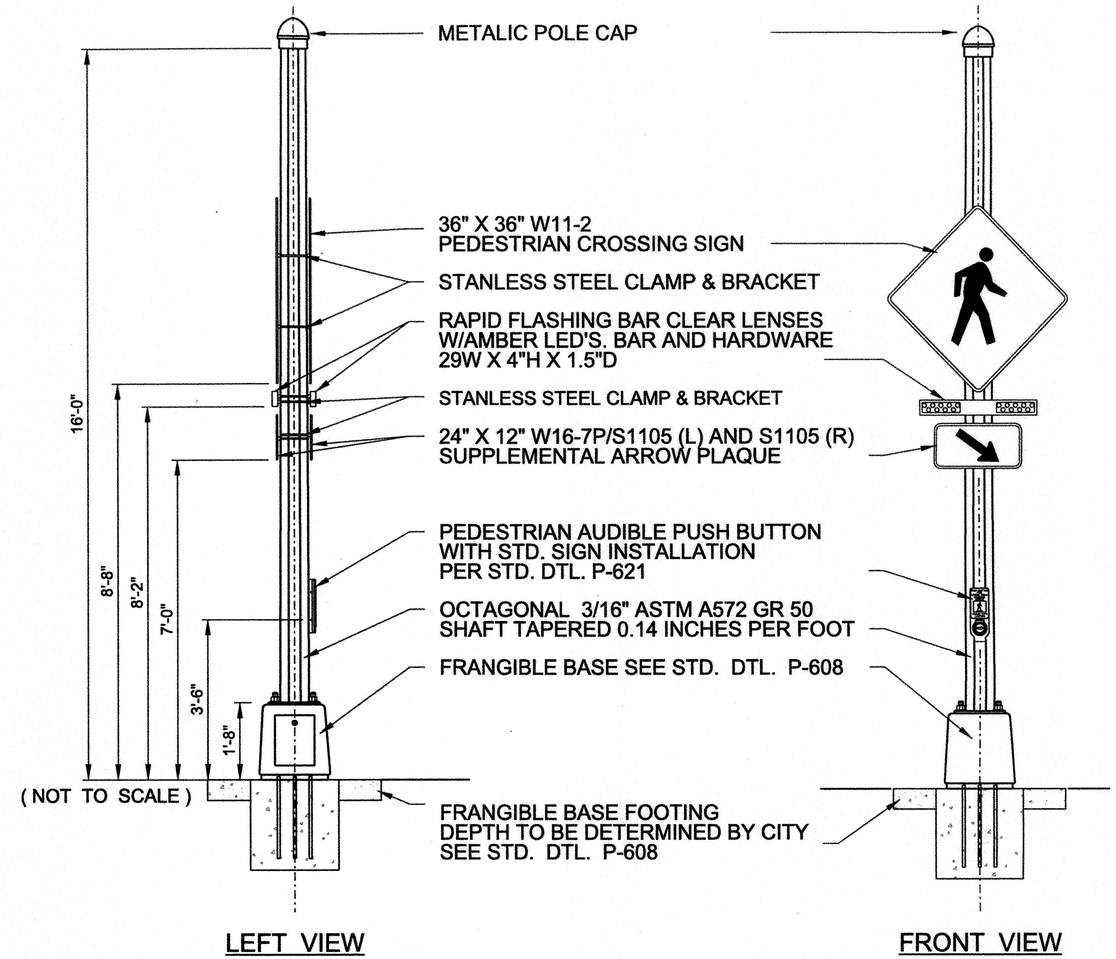

RECTANGULAR RAPID FLASH BEACON (AC POWERED) POLE ASSEMBLY DETAIL

(WITH CONTROLLER AND SERVICE CABINET)

The selection and use of this Standard Drawing, while designed in accordance with generally accepted engineering principles and practices, is the sole responsibility of the user.

BUREAU OF TRANSPORTATION
CITY OF PORTLAND, OREGON
Chief Engineer

Standard Drawing Title
RECTANGULAR RAPID FLASH BEACON (AC POWERED) POLE ASSEMBLY DETAIL

Note:
All material and workmanship shall be in accordance with the City of Portland Standard Construction Specifications.

Effective Date: 10-24-11
Calc. Book No.:
Baseline Report Date:

Standard Drawing No.
P-639

Plot Date: 2/11/2013 6:47:38 AM Filename: S:_II_Design\T00121 - 50's Bikeway Woodstock Blvd-Thompson St, SE-NE\CAD\PLAN\SHEETS\SHT P-639 PORTLAND STANDARD DRAWING\PLOT_SHT_ P-639.dgn
Plot Date: 10/4/2012 12:42:51 PM

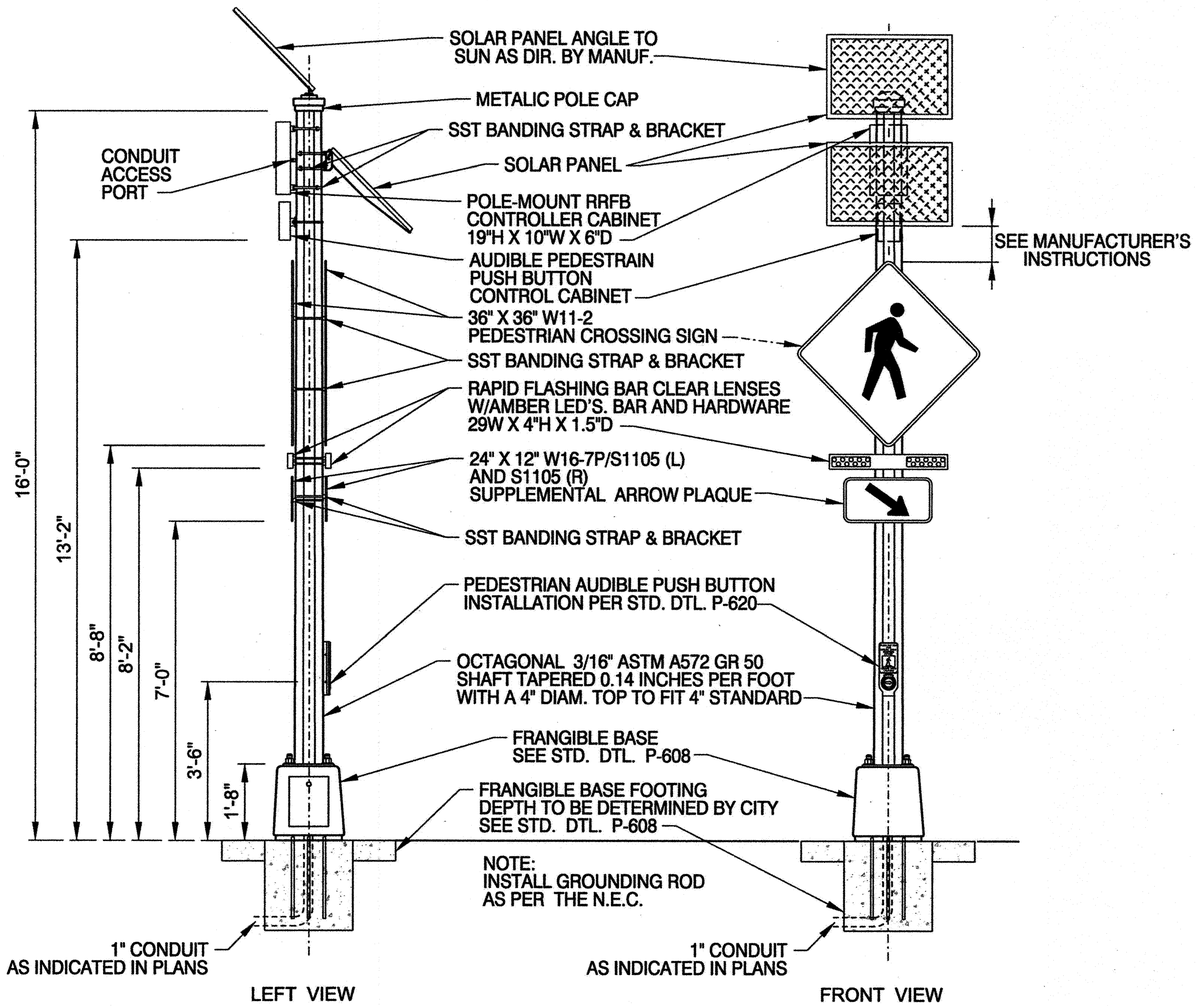

RECTANGULAR RAPID FLASH BEACON (SOLAR POWERED) POLE ASSEMBLY DETAIL

(NOT TO SCALE)

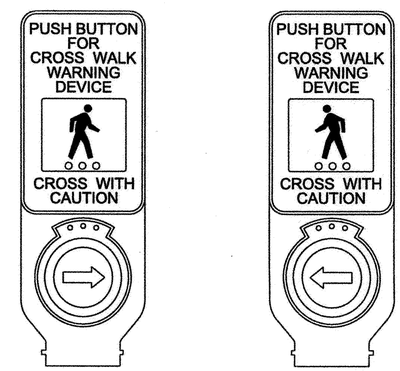

CROSSING SIGN DETAIL

ON POLARA MODEL X-Z PUSH BUTTON STATION

(NOT TO SCALE)

The selection and use of this Standard Drawing, while designed in accordance with generally accepted engineering principles and practices, is the sole responsibility of the user.

BUREAU OF TRANSPORTATION
CITY OF PORTLAND, OREGON

Chief Engineer

Standard Drawing Title

RECTANGULAR RAPID FLASH BEACON (SOLAR POWERED) POLE ASSEMBLY DETAIL

Note:
All material and workmanship shall be in accordance with the City of Portland Standard Construction Specifications.

Effective Date: 03-21-12

Calc. Book No.:

Baseline Report Date:

Standard Drawing No.

P-640

Plot Date: 2/1/2013 6:51:12 AM Filename: S:_IL-Design\T00121 - 50's Bikeway Woodstock Blvd-Thompson St, SE-NE\CAD\PLAN_SHEETS\SHT P-640 PORTLAND STANDARD DRAWING\PLOT_SHT_ P-640.dgn
Plot Date: 3/22/2012 4:48:16 PM

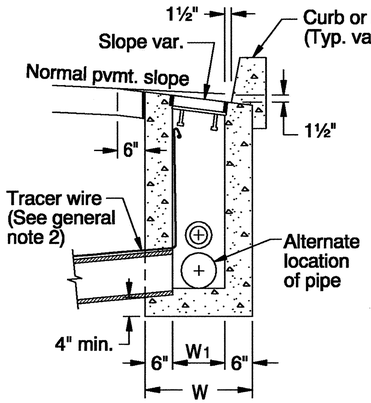

SECTION B-B

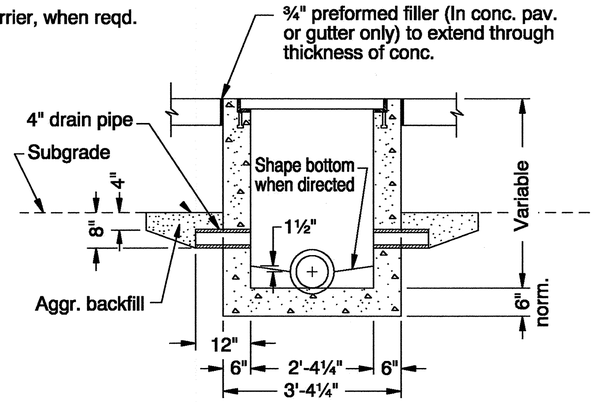

SECTION A-A

INLET TYPE	W	W1
G-1	2'-8⅞"	1'-8⅞"
G-2, G-2M	3'-3⅜"	2'-3⅜"

INLET WITHOUT SUMP

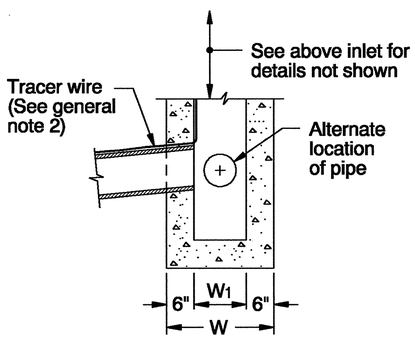

SECTION B-B

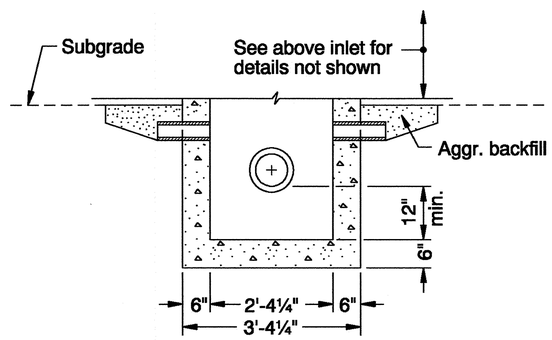

SECTION A-A

INLET WITH SUMP
(See general note 3)

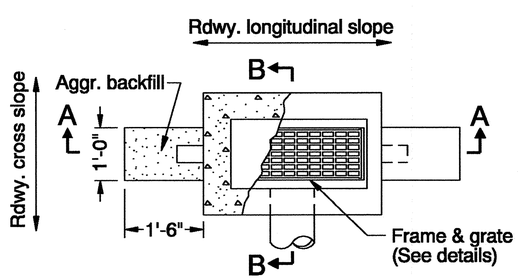

PLAN

TYPES G-1, G-2, G-2M

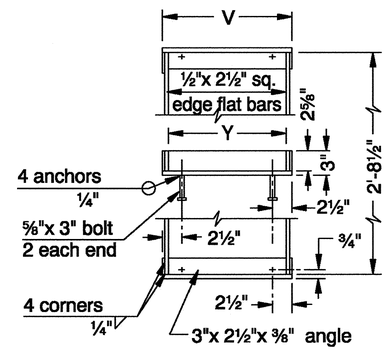

FRAME

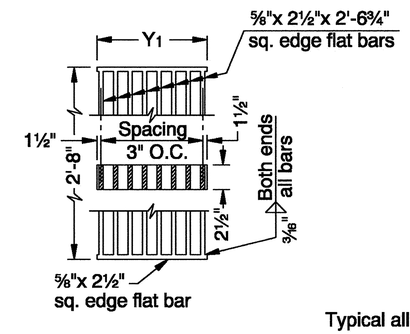

GRATE
(TYPE 1)

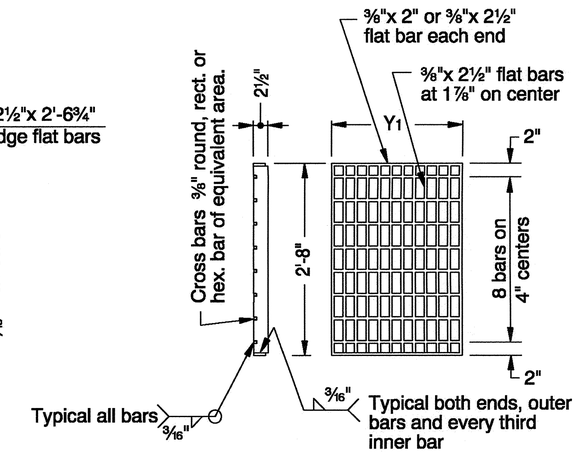

GRATE
(TYPE 2)

NOTES:

⅜" cross bars shall be flush with the grate surface and may be fillet welded, resistance welded or electroforged to bearing bars.

Cast iron grate and frame are acceptable alternates.

INLET TYPE	FRAME		GRATE				
	V	Y	Y1	NO. OF BARS	TYPE	REMARKS	
G-1	1'-10¾"	1'-9⅝"	1'-9"	12	2	1 Grate	Bicycle-safe
G-2	2'-4¾"	2'-3⅜"	1'-1½"	8	2	2 Grates	Bicycle-safe
G-2M, G-2MA	2'-4¾"	2'-3⅜"	2'-3"	9	1	1 Grate	See general note 6

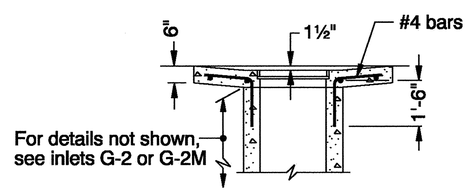

SECTION C-C

NOTE:

All reinforcement to be placed 2" clear of nearest face of concrete unless shown or noted otherwise

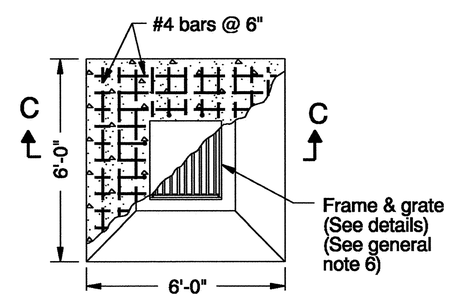

PLAN

TYPE G-2MA

GENERAL NOTES FOR ALL DETAILS:

1. See Std. Drg. RD366 for gutter transition.
2. See Std. Drg. RD336 for tracer wire details, or approved alternate.
3. Provide sump only where shown on plans, and allowed by jurisdiction.
4. All concrete shall be commercial grade concrete.
5. Location, elevation, and number of pipe(s) varies.
6. Type 1 grate allowed only in locations not subject to bicycle or pedestrian use.
7. Max. pipe diameter varies with pipe material.

CALC. BOOK NO. N/A

BASELINE REPORT DATE 23-JUL-2012

NOTE: All material and workmanship shall be in accordance with the current Oregon Standard Specifications

The selection and use of this Standard Drawing, while designed in accordance with generally accepted engineering principles and practices, is the sole responsibility of the user and should not be used without consulting a Registered Professional Engineer.

OREGON STANDARD DRAWINGS

CONCRETE INLETS
TYPE G-1, G-2, G-2M & G-2MA

2008

DATE	REVISION DESCRIPTION
06-2009	REVISED & ADDED NOTES
12-2009	REVISED DETAILS AND NOTES
07-2010	REVISED DETAILS AND NOTES
01-2011	REVISED DETAILS AND ADDED NOTES
07-2012	ADDED NOTE

Plot Date: 2/11/2013 6:51:47 AM Filename: S:_IL_Design\T00121 - 50's Bikeway Woodstock Blvd-Thompson St, SE-NE\CAD\PLAN_SHEETS\SHT RD 364 OREGON STANDARD DRAWING\PLOT_SHT_ RD 364.dgn
rd364.dgn 23-JUL-2012
RD364

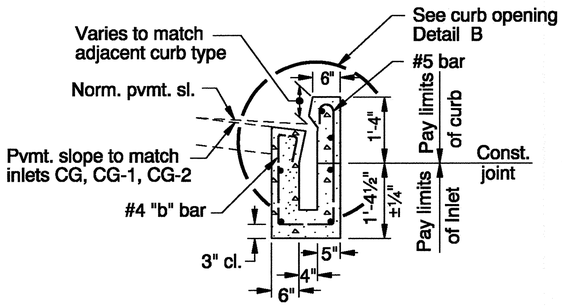

SECTION D-D

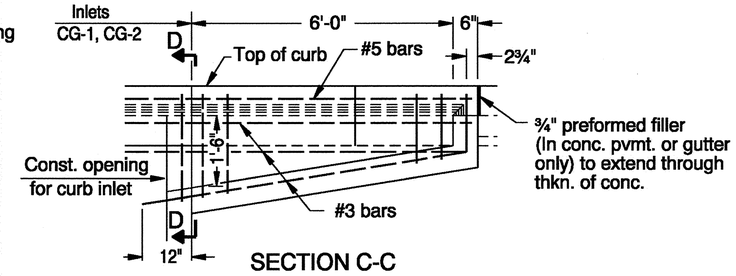

SECTION C-C

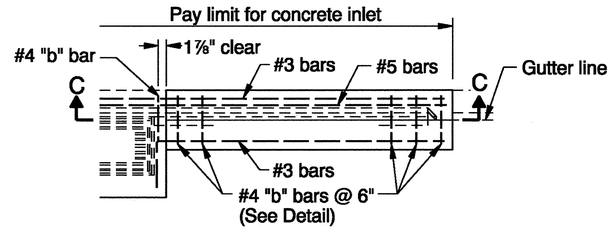

PLAN

NOTES:
1. #4 "b" bar replaces #3 "a" bar of type CG-1 and CG-2 inlets.
2. #4 & #3 "b" bars to be placed during curb construction.
3. All bars to be placed 1½" clear of nearest face of concrete unless shown or noted otherwise.
4. All bar splices shall be 20 dia.

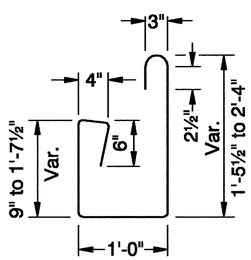

#3 "b" BAR

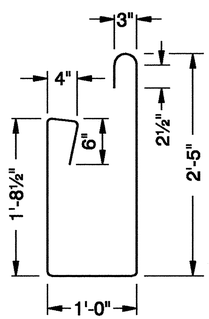

#4 "b" BAR

CURB INLET CHANNEL

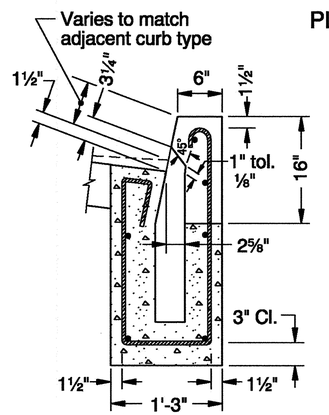

DETAIL B
CURB OPENING

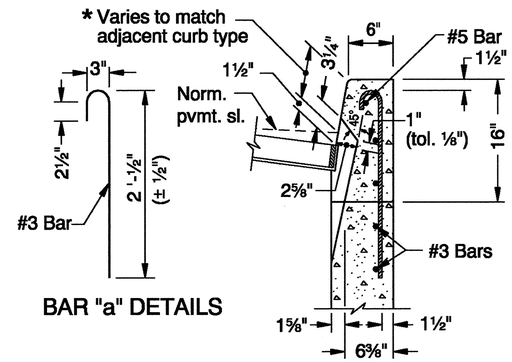

BAR "a" DETAILS

DETAIL A
CURB OPENING

INLET TYPE	W	W_1
CG-1	2'-8⅞"	1'-8⅞"
CG-2	3'-3⅜"	2'-3⅜"

NOTES:
1. #3 "a" bars to be placed during curb construction (see note 1 for curb inlet)
2. All bars to be placed 1½" clear of nearest face of concrete unless shown or noted otherwise.
3. All bar splices shall be 20 dia.

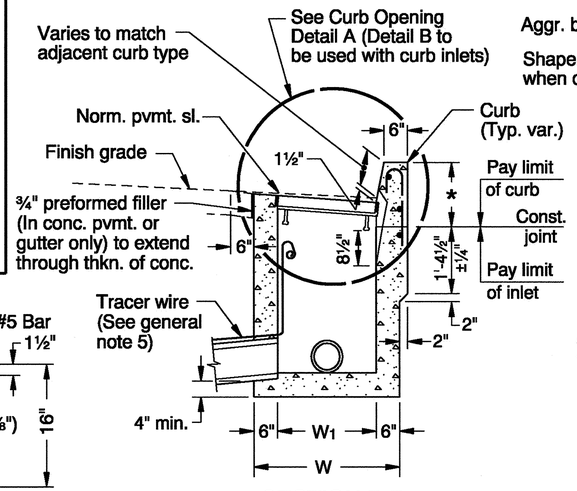

SECTION B-B

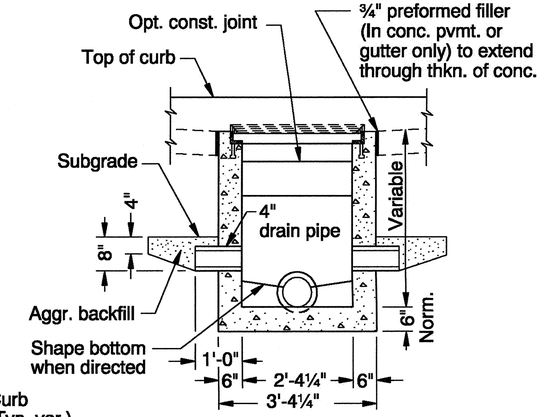

SECTION A-A

* Varies, see general note 4

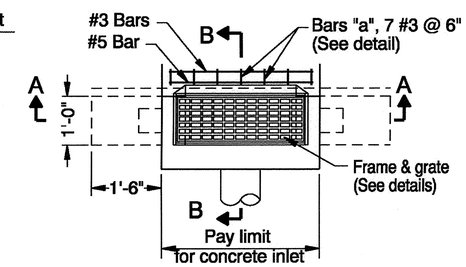

PLAN

TYPES CG-1, CG-2

GENERAL NOTES FOR ALL DETAILS:

1. Where precast inlets are used as an alternate to cast-in-place inlets, a 4" compacted leveling bed of sand or ¼"-0 crushed aggregate shall be provided.
2. For frame and grate details, see Std. Drg. RD364.
3. Provide sump only where shown on plans, and allowed by jurisdiction. For sump details, see Std. Drg. RD364.
4. For curb details, see Std. Drgs. RD700 & RD701.
5. See Std. Drg. RD336 for tracer wire details, or approved alternate.
6. Max. pipe diameter varies with pipe material.

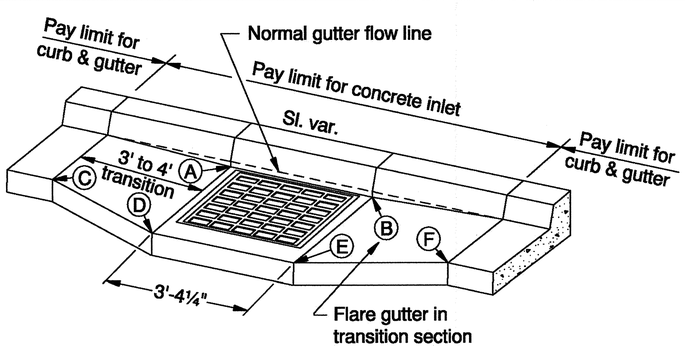

NOTES:
1. Provide 1½" local depression at points A & B.
2. Match normal pvmt. grade at points C, D, E & F.
3. Vary transition section slopes to match above points.

GUTTER TRANSITION SECTION

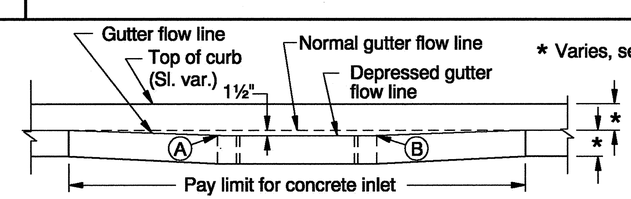

SECTION E-E

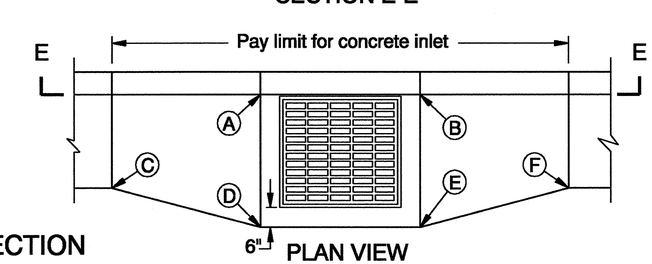

PLAN VIEW

CALC. BOOK NO. N/A

BASELINE REPORT DATE 23-JUL-2012

NOTE: All material and workmanship shall be in accordance with the current Oregon Standard Specifications

The selection and use of this Standard Drawing, while designed in accordance with generally accepted engineering principles and practices, is the sole responsibility of the user and should not be used without consulting a Registered Professional Engineer.

OREGON STANDARD DRAWINGS

CONCRETE INLETS TYPE CG-1, CG-2 AND CURB INLET CHANNEL

2008

DATE	REVISION DESCRIPTION
06-2009	REVISED & ADDED NOTES
07-2010	REVISED DETAILS & NOTES
01-2011	REVISED DETAIL
07-2012	ADDED NOTE

Effective Date: December 1, 2012 - May 31, 2013

RD366

rd366.dgn 23-JUL-2012
RD366
Plot Date: 2/11/2013 6:52:37 AM Filename: S:_JL_Design\T00121- 50's Bikeway Woodstock Blvd-Thompson St, SE-NE\CAD\PLAN_SHEETS\SHT RD 366 OREGON STANDARD DRAWING\PLOT_SHT_ RD 366.dgn

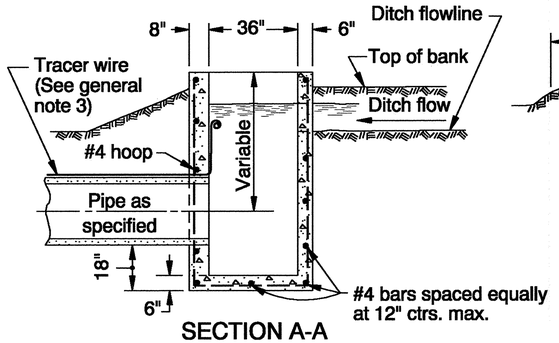

SECTION A-A

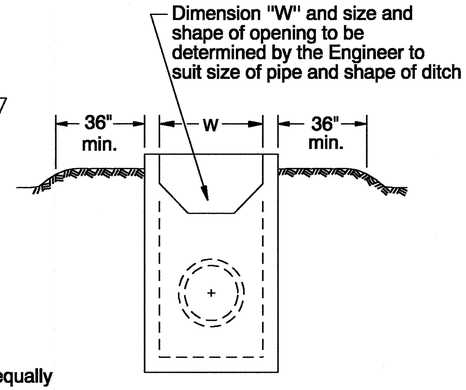

END VIEW

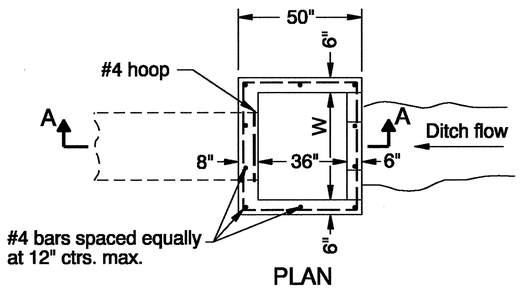

PLAN

SIPHON BOX

NOTE:
All reinforcement to be #4 bars at 12" ctrs. max.

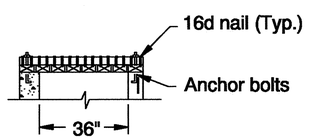

SECTION A-A

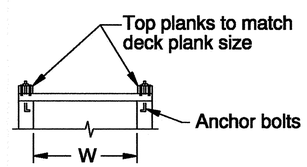

END VIEW

NOTE:
All wood shall be pressure treated.

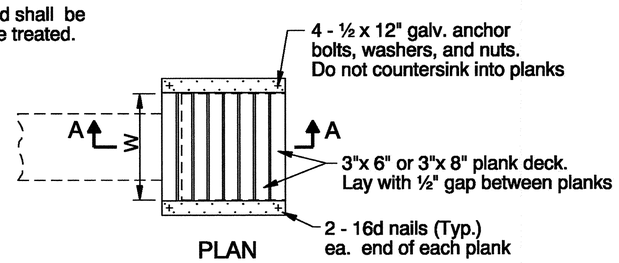

PLAN

SIPHON BOX COVER

SIPHON BOX AND COVER

NOTE:
X & Y dimensions to be determined by field measurements.

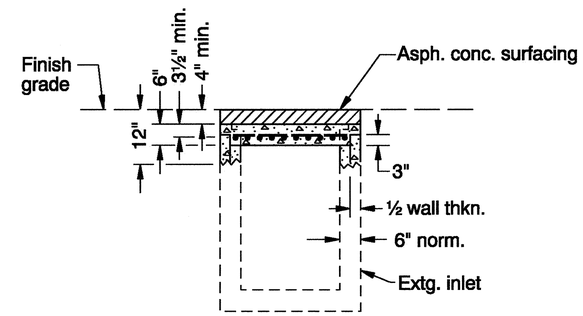

SECTION A-A

Place bars in concrete inlet cap 1½" min. clear of bottom face of concrete and 3½" min. clear of top face of concrete.

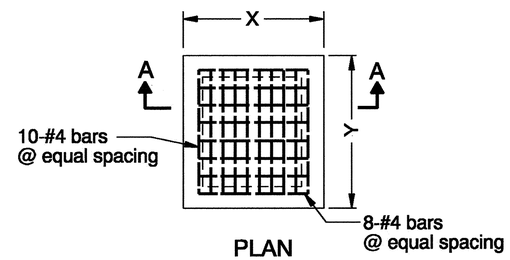

PLAN

CONCRETE INLET CAP

NOTE:
X & Y dimensions to be determined by field measurements.

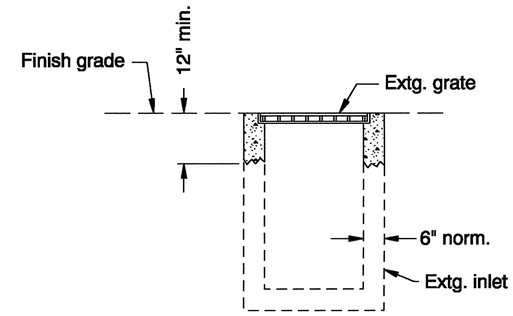

SECTION A-A

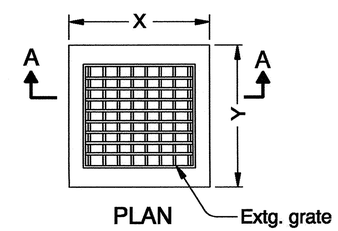

PLAN

ADJUST EXISTING INLET
(For details not shown, see Std. Drg. RD366)

GENERAL NOTES FOR ALL DETAILS:

1. All reinforcement to be placed a minimum of 2" clear of nearest face of concrete unless otherwise shown or noted.
2. If metal frame and grate is reqd. conform to details for Type 1 grate. Size frame and grate to match dimensions of siphon box used. See Std. Drg. RD364.
3. See Std. Drg. RD336 for tracer wire details.
4. Max. pipe diameter varies with pipe material.

CALC. BOOK NO. _____

BASELINE REPORT DATE _____

The selection and use of this Standard Drawing, while designed in accordance with generally accepted engineering principles and practices, is the sole responsibility of the user and should not be used without consulting a Registered Professional Engineer.

NOTE: All material and workmanship shall be in accordance with the current Oregon Standard Specifications

OREGON STANDARD DRAWINGS

MISCELLANEOUS DRAINAGE STRUCTURES SIPHON BOX, INLET CAP & INLET ADJUSTMENT

2008

DATE	REVISION DESCRIPTION
07-2012	REMOVED & ADDED NOTES

Effective Date: December 1, 2012 - May 31, 2013

RD376

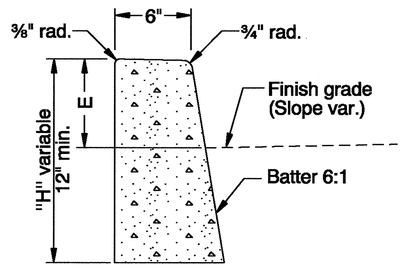

O.D.O.T. & City of Portland Standard "H"=16"
STANDARD CURB

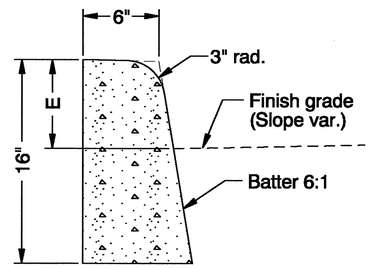

MOUNTABLE CURB

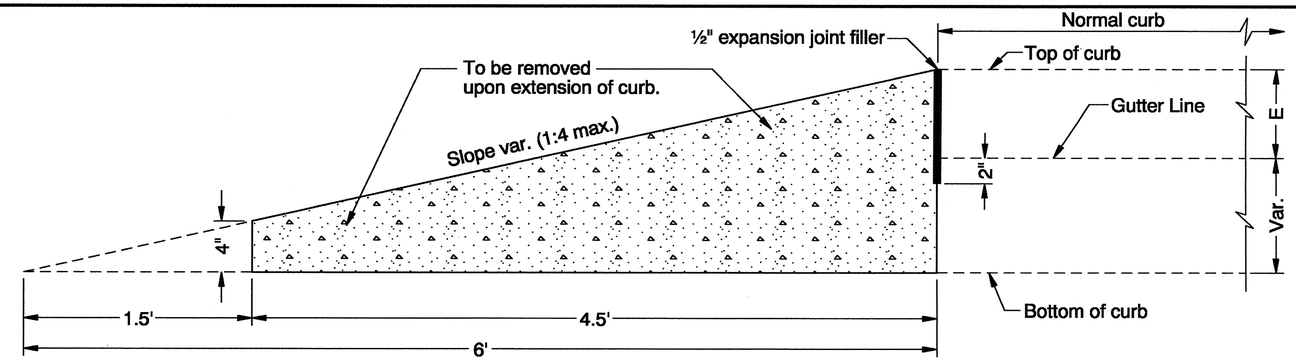

CURB ENDING DETAIL

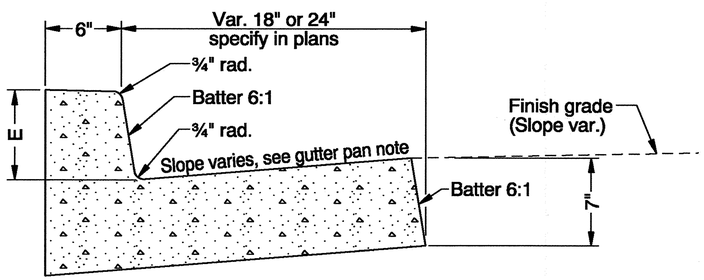

CURB AND GUTTER

GUTTER PAN NOTES:
Slope 8% normal.
Use 5% slope for gutter width greater than 24".
Slope 4% at ramps. Vary slope as reqd. for drainage.
Vary where shown on plans, and allowed by jurisdiction.

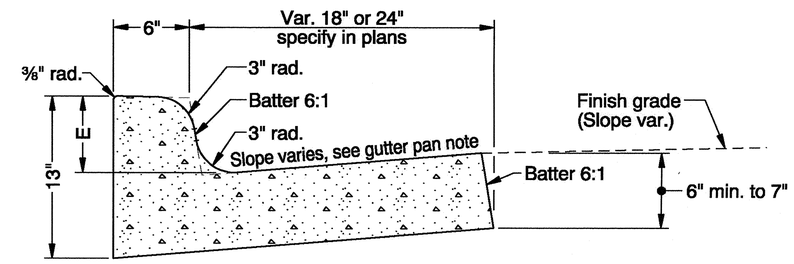

MOUNTABLE CURB AND GUTTER

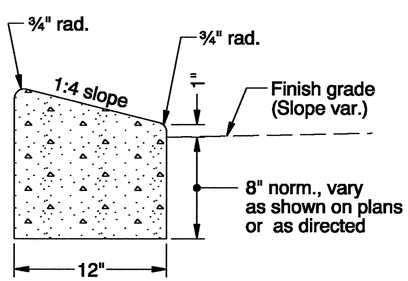

LOW PROFILE
MOUNTABLE CURB

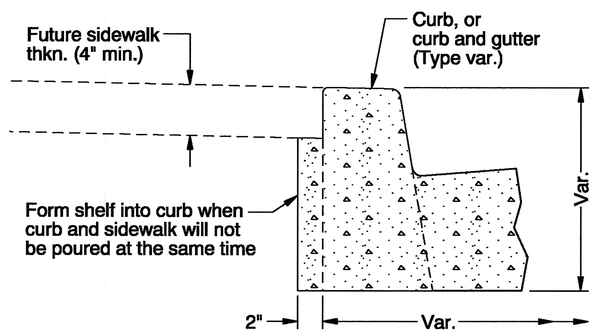

MODIFICATION FOR KEYWAY
(Where shown on plans)

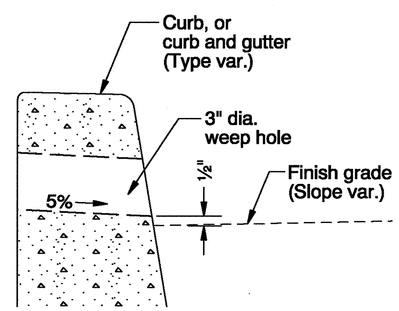

WEEP HOLE DETAIL
(Where shown on plans, and allowed by jurisdiction)

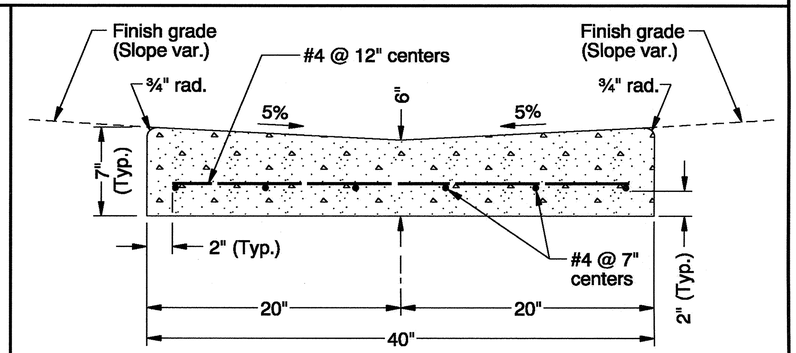

VALLEY GUTTER

CALC. BOOK NO. N/A

BASELINE REPORT DATE 30-JUN-2009

NOTE: All material and workmanship shall be in accordance with the current Oregon Standard Specifications

GENERAL NOTES FOR ALL DETAILS:

1. Curb exposure "E" = 6" to 9", as measured vertically from flowline to highest point on curb. Vary as shown on plans or as directed. O.D.O.T standard "E"=7".
2. Const. expansion joints at 200' maximum spacing, and at points of tangency, and at ends of each driveways.
3. Const. contraction joints at 15' maximum spacing, and at ends of each inlet and ramp.
4. Transitions shall be used to connect curbs of different exposures "E". ("E" Is the total vertical dimension of those curb surfaces having a slope of 1:1 or steeper). Minimum desirable transition length shall be 20' for each 1" difference in "E".
5. Tops of all curbs shall slope toward the roadway at 2% normal, unless otherwise shown, or as directed.
6. Dimensions are nominal, vary to conform with curb machine approved by the engineer.
7. Dimensions adjacent to radii are measured to the point of intersection of curb surfaces.
8. For sidewalk details, and monolithic curb & sidewalk, see Std. Drg. RD720.
9. For drainage curbs, see Std. Drg. RD701.

The selection and use of this Standard Drawing, while designed in accordance with generally accepted engineering principles and practices, is the sole responsibility of the user and should not be used without consulting a Registered Professional Engineer.

OREGON STANDARD DRAWINGS

CURBS

2008

DATE	REVISION DESCRIPTION
07-2009	REVISED DETAILS & NOTES

Effective Date: December 1, 2012 - May 31, 2013

RD700

rd700.dgn 30-JUN-2009
Plot Date: 2/11/2013 6:54:22 AM Filename: S:_II_Design\T00121 - 50's Bikeway Woodstock Blvd-Thompson St, SE-NE\CAD\PLAN_SHEETS\SHT RD 700 OREGON STANDARD DRAWING\PLOT_SHT_ RD 700.dgn

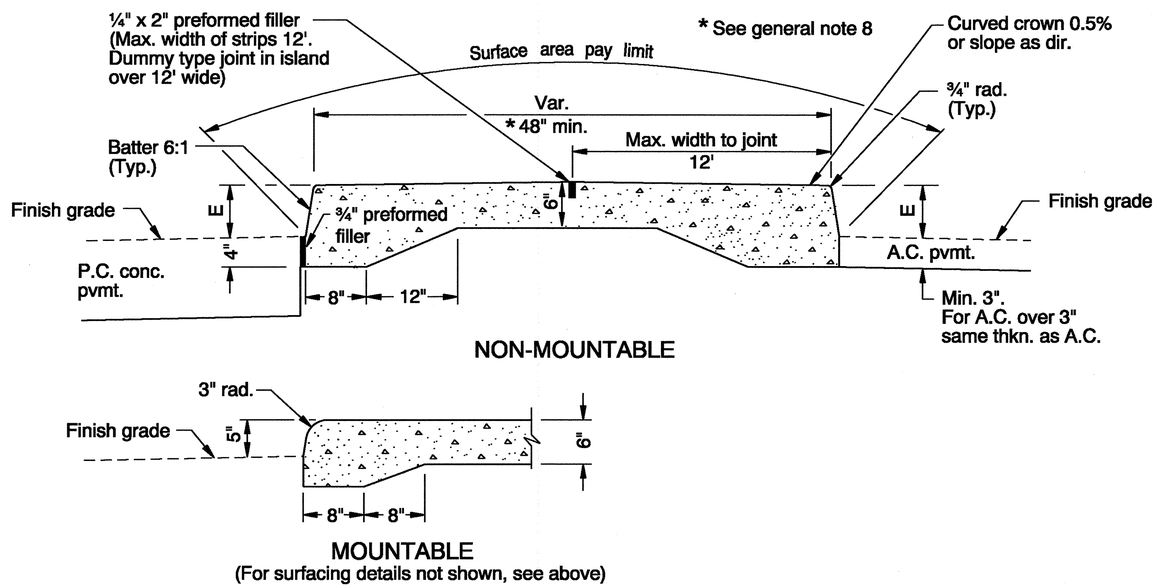

TYPE A

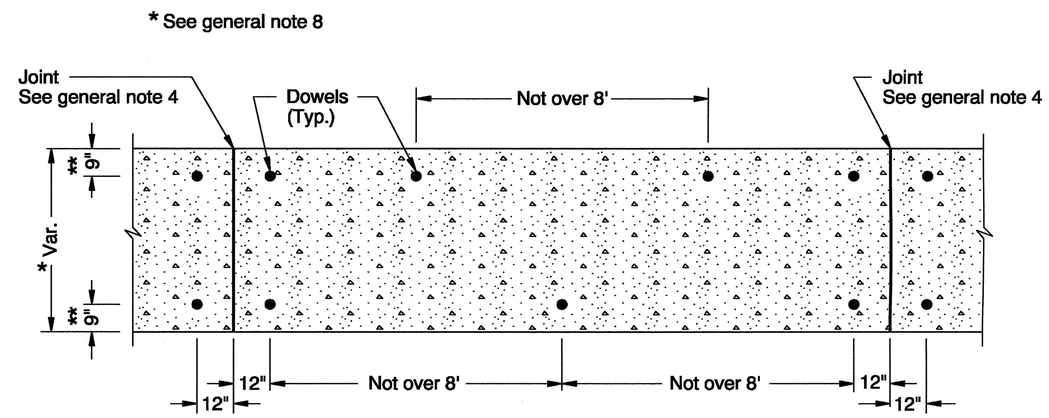

DOWEL PLAN
FOR TYPE C OR TYPE CA ISLANDS & TRANSITIONS
(ON SURFACE OF NEW OR EXISTING PAVEMENT)

**Also see below for type CA island requirement.

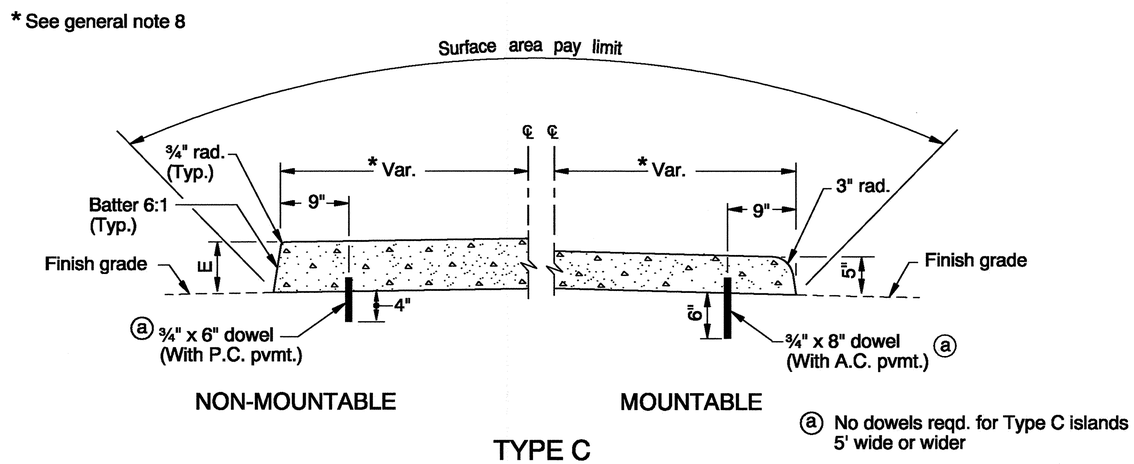

ⓐ No dowels reqd. for Type C islands
5' wide or wider

TYPE C

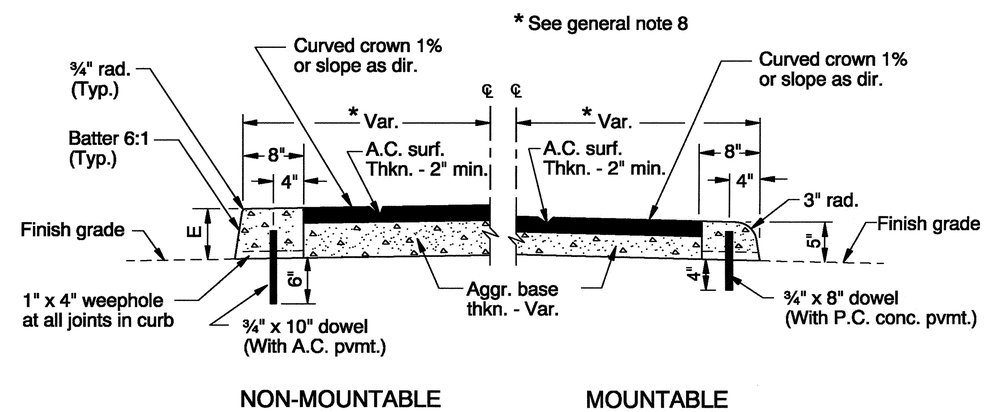

TYPE CA

CALC. BOOK NO. N/A

BASELINE REPORT DATE 05-NOV-2009

NOTE: All material and workmanship shall be in accordance with the current Oregon Standard Specifications

GENERAL NOTES FOR ALL DETAILS:

1. Curb exposure "E" = 7" normal. Vary as shown on plans or as directed.
2. Standard batter is shown. Vary as shown on typical section or as directed.
3. Transverse joints in conc. islands to match joints in conc. pvmt. and to be of same type (Omit dowels in expansion joints).
4. Set joint spacing 200' max. for expansion and 15' max. for contraction.
5. Place preformed filler along one side of conc. islands in conc. pvmt. and around all curved ends.
6. Dowels shall be ¾" dia. with length as shown.
   In new conc. pvmt. set dowels before conc. hardens.
   In extg. conc. pvmt. drill holes 1½" dia. and grout dowels in.
   In A.C. pvmt. drive dowels.
7. For transitions to traffic separators, see Std. Drg. RD706.
8. Minimum island width is 48". For accessible route islands, see Std. Drg. RD710.

The selection and use of this Standard Drawing, while designed in accordance with generally accepted engineering principles and practices, is the sole responsibility of the user and should not be used without consulting a Registered Professional Engineer.

OREGON STANDARD DRAWINGS

ISLANDS

2008

DATE	REVISION DESCRIPTION
12-2009	REVISED & ADDED NOTE

Effective Date: December 1, 2012 - May 31, 2013

RD705

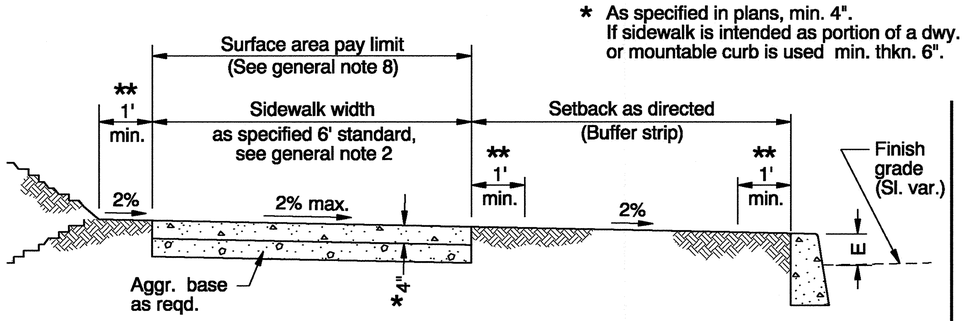

TYPICAL SETBACK SIDEWALK CROSS SECTION
E = curb exposure, see general note 6

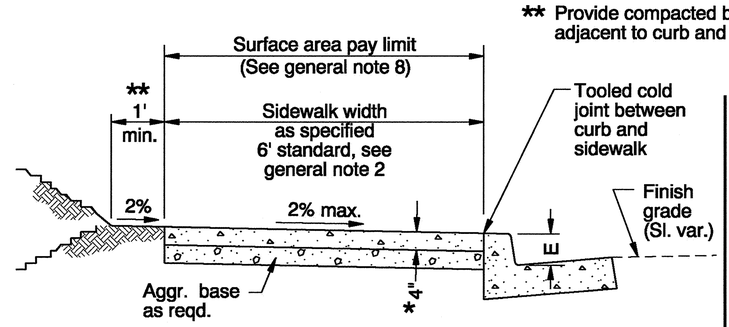

TYPICAL CURB SIDEWALK CROSS SECTION
E = curb exposure, see general note 6

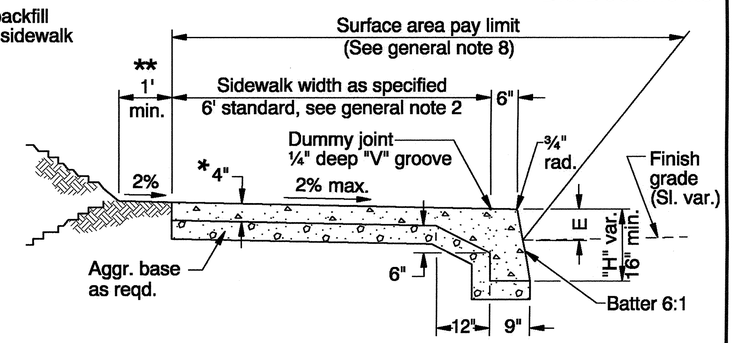

TYPICAL MONOLITHIC CURB & SIDEWALK
E = curb exposure, see general note 6

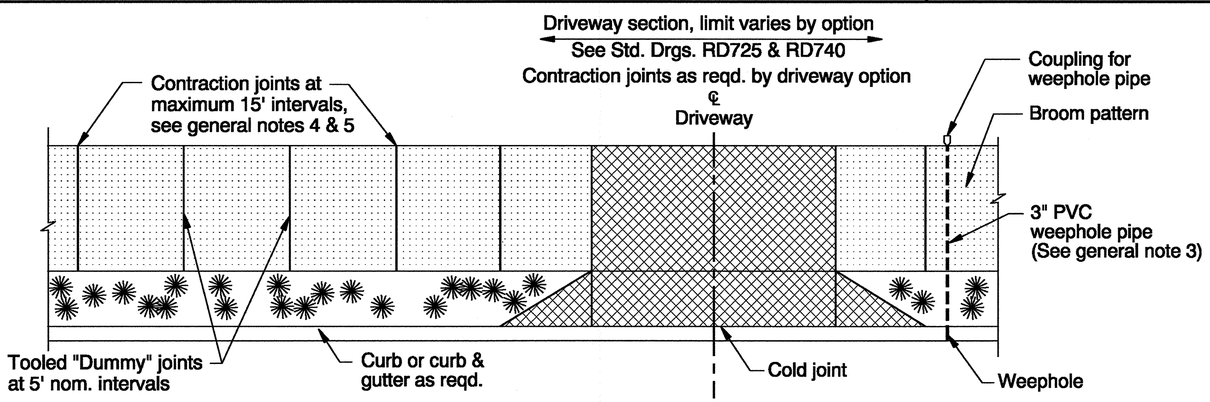

TYPICAL PLAN VIEW - SEPARATED SIDEWALK

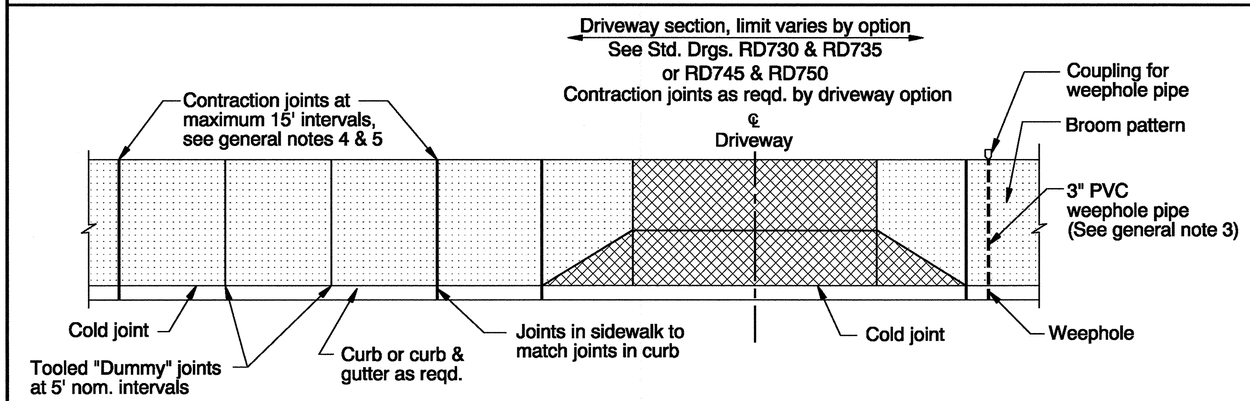

TYPICAL PLAN VIEW - CURB LINE SIDEWALK

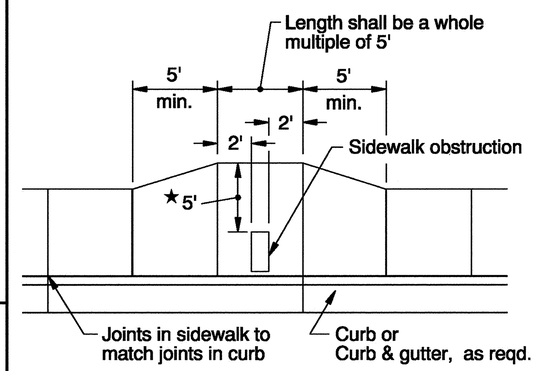

★ When site constraints prohibit a 5' passage, the Engineer may direct this to be reduced, but no less than 4'.

REQUIRED SIDEWALK WIDENING AROUND OBSTRUCTIONS

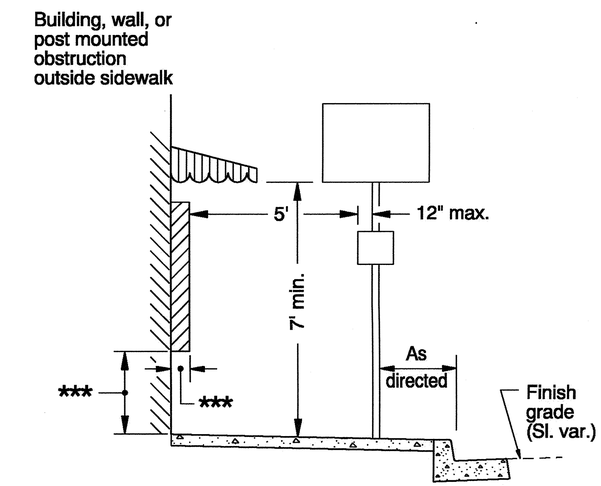

*** Objects with base below 2'-4" may protrude any distance as long as the 5' circulation path is maintained. When an object with a base higher than 2'-4" protrudes further than 4" provide a curb below protrusion to delineate edge.

CLEAR CIRCULATION PATH

General configuration of driveway pay limit (See general note 8), varies by option.

GENERAL NOTES FOR ALL DETAILS:

1. Include additional paved or unpaved 2' clearance to vertical faces higher than 5' such as retaining walls, sound walls, fences and buildings.
2. Curb type and sidewalk width as shown on plans or as directed. On sidewalks 8' and wider, provide a longitudinal joint at the midpoint.
3. Install 3" pvc weephole pipes in sidewalks where shown on plans, and allowed by jurisdiction. Place contraction joint over top of pipe.
4. Const. expansion joints at 200' maximum spacing, and at points of tangency, and at ends of each driveway. For monolithic curb & sidewalk, const. expansion joints at 45' maximum spacing.
5. Const. contraction joints at 15' maximum spacing, and at ends of each driveway and ramp.
6. For curb details, see Std. Drgs. RD700 & RD701.
7. Sidewalk details are based on United States Access Board Standards.
8. For driveway details not shown, see Std. Drgs. RD725, RD730, RD735, RD740, RD745 & RD750.

CALC. BOOK NO. N/A

BASELINE REPORT DATE 23-JUL-2012

NOTE: All material and workmanship shall be in accordance with the current Oregon Standard Specifications

The selection and use of this Standard Drawing, while designed in accordance with generally accepted engineering principles and practices, is the sole responsibility of the user and should not be used without consulting a Registered Professional Engineer.

OREGON STANDARD DRAWINGS

SIDEWALKS

2008

DATE	REVISION DESCRIPTION
06-2009	REVISED DETAILS & NOTES
12-2009	REVISED DETAILS, DETAIL TITLES & NOTES
07-2012	REVISED DETAILS, REVISED & ADDED NOTES

Effective Date: December 1, 2012 - May 31, 2013

Plot Date: 2/11/2013 6:55:56 AM Filename: S:_II_Design\T00121- 50's Bikeway Woodstock Blvd-Thompson St, SE-NE\CAD\PLAN_SHEETS\SHT RD 720 OREGON STANDARD DRAWING\PLOT_SHT_ RD 720.dgn
rd720.dgn 23-JUL-2012
RD720

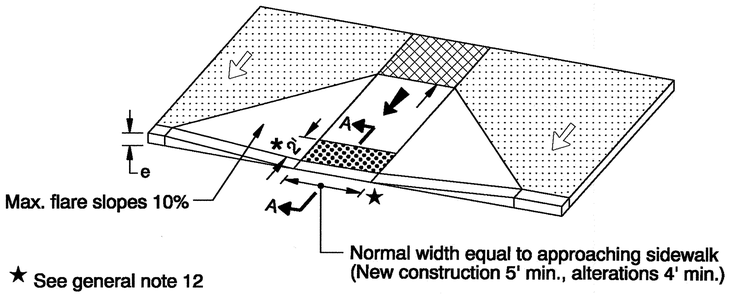

PERPENDICULAR SIDEWALK RAMP DETAIL

(Use "Parallel Sidewalk Ramp Detail" or "Combination Sidewalk Ramp Detail" when reqd. landing cannot be obtained)

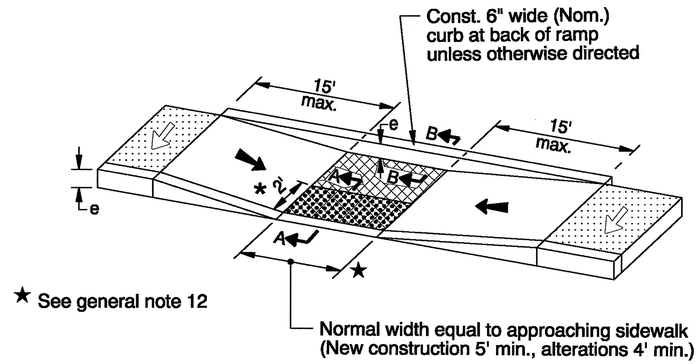

PARALLEL SIDEWALK RAMP DETAIL

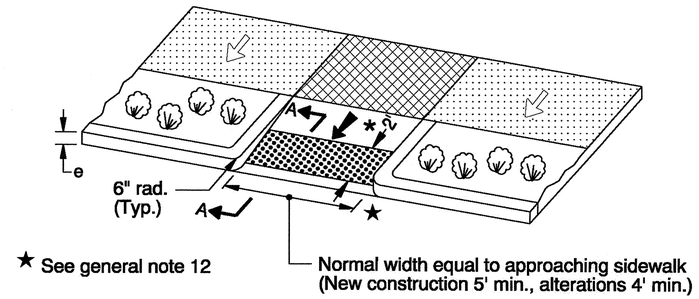

PERPENDICULAR SIDEWALK RAMP DETAIL (THROUGH BUFFER STRIP)

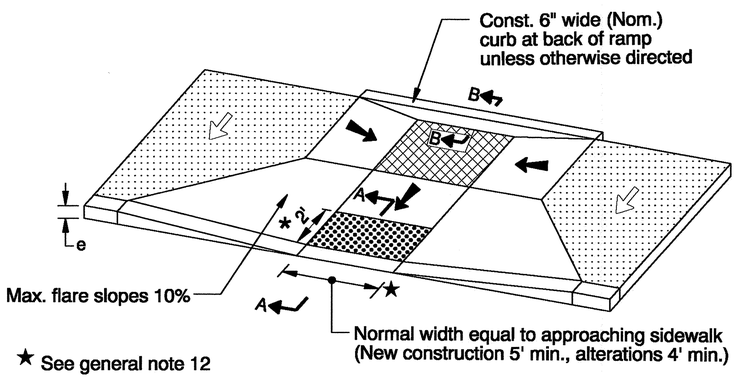

COMBINATION SIDEWALK RAMP DETAIL

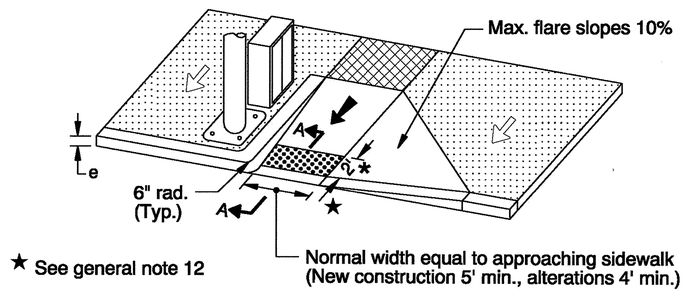

PERPENDICULAR SIDEWALK RAMP DETAIL (WITH SINGLE FLARE)

(Use "Parallel Sidewalk Ramp Detail" or "Combination Sidewalk Ramp Detail" when reqd. landing cannot be obtained)

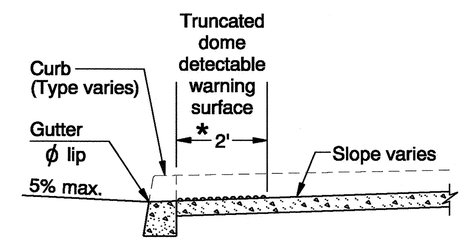

SECTION A-A

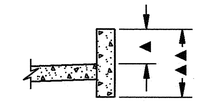

SECTION B-B

⇦	Slope 2% max.
⬅	Slope 8.33% (1":12") max. (See general note 10)
▦	Truncated dome detectable warning surface
▩	Landing Area (Min. level area 48" x 48") For the purposes of this application, a 2% maximum slope (For drainage) is considered level
* 2'	See general note 5

GENERAL NOTES FOR ALL DETAILS:

1. Sidewalk ramp details are based on United States Access Board Standards.
2. See Std. Drgs. RD700 & RD701 for curbs. See Std. Drg. RD720 for sidewalks. See Std. Drgs. TM503 & TM530 for crosswalk markings, widths, etc.
3. Tooled joints are required at all sidewalk ramp slope break lines.
4. Sidewalk curb ramp slopes shown are relative to the true level horizon (Zero bubble).
5. Place truncated dome detectable warning surface in the lower 2' adjacent to traffic of throat of ramp only. For details not shown, see Std. Drg. RD759.
6. Side flares that are not part of the path of travel may be any slope.
7. Sidewalk flare is not necessary where the ramp is protected from pedestrian cross-travel.
8. For the purpose of this drawing, a curb ramp is considered "perpendicular" if the angle between the longitudinal axis of the ramp and a line tangent to the curb at the ramp center is 75° or greater.
9. Ramps for paths intersecting a roadway should be full width of path, excluding flares. When a ramp is used to provide bicycle access from a roadway to a sidewalk, the ramp should be 8' wide.
10. In alterations, curb ramp slope(s) may be 10% for a max. rise of 6", or 12.5% for a max. rise of 3".
11. For sidewalk ramp placement options, see Std. Drgs. RD756 & RD757.
12. Check the gutter flow depth at ramp locations to assure that the design flood does not overtop the back of sidewalk at ramp. If overtopping occurs place an inlet at upstream side of ramp or perform other approved design mitigation.
13. Only use details allowed by jurisdiction.

CALC. BOOK NO. N/A

BASELINE REPORT DATE 09-JUL-2010

NOTE: All material and workmanship shall be in accordance with the current Oregon Standard Specifications

The selection and use of this Standard Drawing, while designed in accordance with generally accepted engineering principles and practices, is the sole responsibility of the user and should not be used without consulting a Registered Professional Engineer.

OREGON STANDARD DRAWINGS

SIDEWALK RAMP DETAILS

2008

DATE	REVISION DESCRIPTION
06-2009	REVISED DETAILS & NOTES
12-2009	REVISED NOTE
07-2010	REVISED NOTE

Plot Date: 2/11/2013 6:57:47 AM Filename: S:_II_Design\T00121- 50's Bikeway Woodstock Blvd-Thompson St, SE-NE\CAD\PLAN_SHEETS\SHT RD 755 OREGON STANDARD DRAWING\PLOT_SHT_ RD 755.dgn
rd755.dgn 12-JUL-2010
RD755

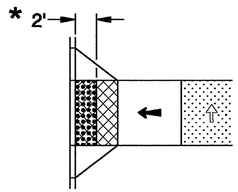

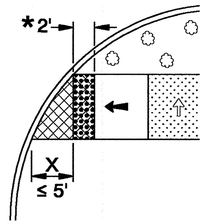

When distance "X" is less than 5', truncated dome detectable warning surface shall be placed perpendicular to the path of travel.

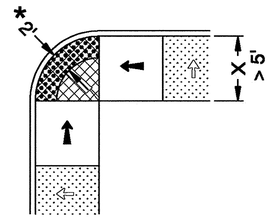

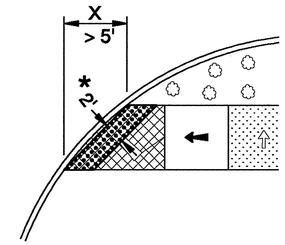

When distance "X" is greater than 5', truncated dome detectable warning surface shall be placed parallel to the bottom of curb ramp.

PLACEMENT ON SIDEWALK RAMP

Slope 2% max.

Slope 8.33% (1":12") max.
(Ramp length 15' max.)
(See general note 8)

Truncated dome detectable warning surface

Landing Area (Minimum level area 48" x 48")
For the purposes of this application,
a 2% maximum slope (For drainage) is considered level

*2' See general note 3

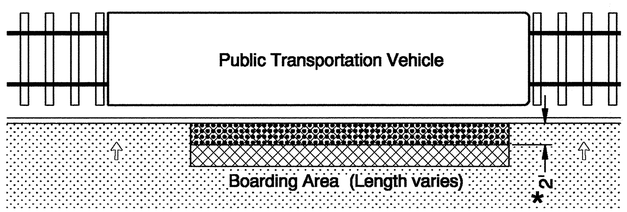

PLACEMENT ON PUBLIC TRANSPORTATION PLATFORM

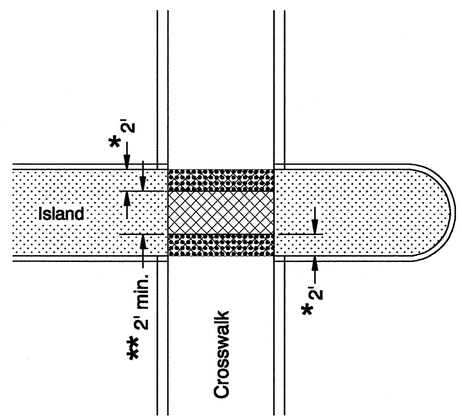

** Omit truncated dome detectable warning surface if less than 2'

PLACEMENT ON CROSSING ISLAND

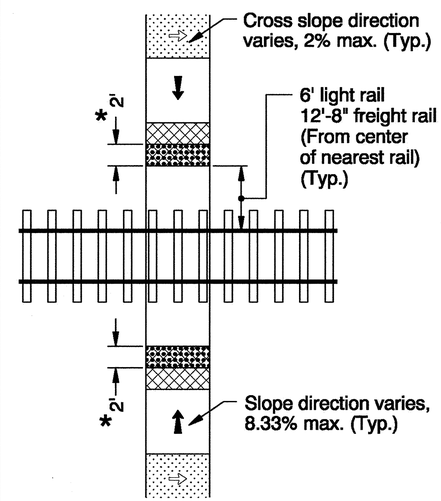

PLACEMENT AT RAIL CROSSING

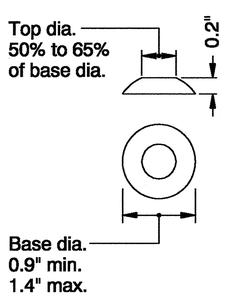

TRUNCATED DOME DETAIL

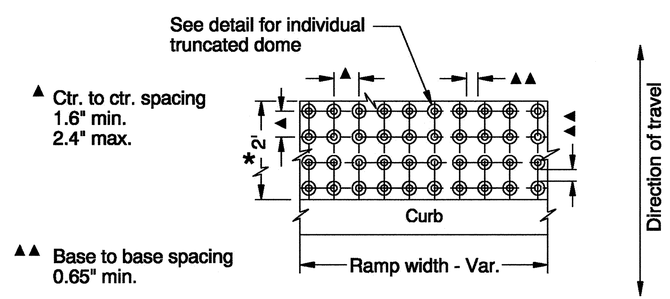

TRUNCATED DOME PATTERN

TRUNCATED DOME DETECTABLE WARNING SURFACE

GENERAL NOTES FOR ALL DETAILS:

1. Truncated dome detectable warning surface details & locations are based on United States Access Board Standards.
2. See Std. Drgs. RD700 & RD701 for curbs. See Std. Drg. RD720 for sidewalks. See Std. Drgs. TM503 & TM530 for crosswalk markings, widths, etc.
3. Place truncated dome detectable warning surface in the lower 2' adjacent to traffic of throat of ramp only, unless otherwise shown.
   Arrange domes using square in-line pattern only.
   Color to be safety yellow if no color specified in construction note.
   All products on an installation to be identical.
4. Truncated dome detectable warning surface shall be used where the pedestrian access route meets the street, in the following locations:
   a) Sidewalk ramps (See Std. Drgs. RD755, RD756, & RD757).
   b) Crossing islands (Accessible Route Islands), (See Std. Drg. RD710).
   c) Rail crossings (See detail).
5. Where public transportation stations (rail, bus, etc.) use platform boarding, truncated dome detectable warning surface shall be placed along the full edge length of the station, when not protected by platform screens or guards.
6. Truncated dome detectable warning surface shall not be used on the following locations:
   a) Midblock sidewalk transitions (See Std. Drg. RD756).
   b) Standard concrete driveways (See Std. Drgs. RD725, RD730, RD735, RD740, RD745, & RD750).
   c) Parking lots.
7. Only use details allowed by jurisdiction.
8. In alterations, curb ramp slope(s) may be 10% for a max. rise of 6", or 12.5% for a max. rise of 3".

CALC. BOOK NO. N/A

BASELINE REPORT DATE 23-JUL-2012

NOTE: All material and workmanship shall be in accordance with the current Oregon Standard Specifications

The selection and use of this Standard Drawing, while designed in accordance with generally accepted engineering principles and practices, is the sole responsibility of the user and should not be used without consulting a Registered Professional Engineer.

OREGON STANDARD DRAWINGS

TRUNCATED DOME DETECTABLE WARNING SURFACE

DETAILS & LOCATIONS

2008

DATE	REVISION DESCRIPTION
06-2009	REVISED & ADDED NOTES
12-2009	REVISED DIMENSIONS AND NOTE
07-2010	REVISED DETAILS & NOTES
07-2012	REVISED NOTE

Effective Date: December 1, 2012 - May 31, 2013

RD759

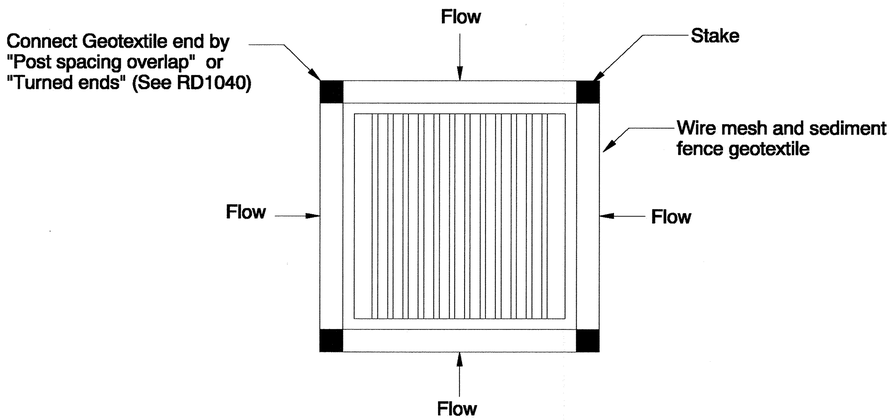

PLAN

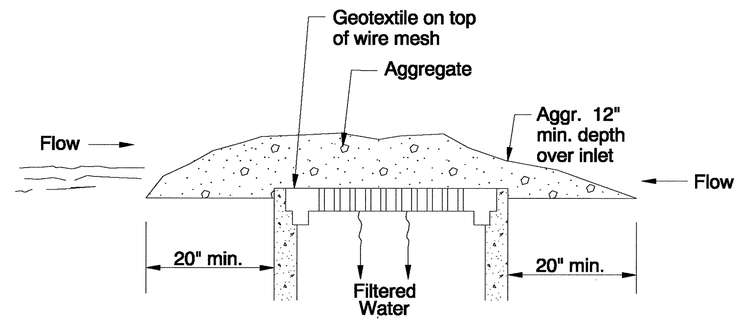

GEOTEXTILE/WIREMESH/AGGREGATE

TYPE 2

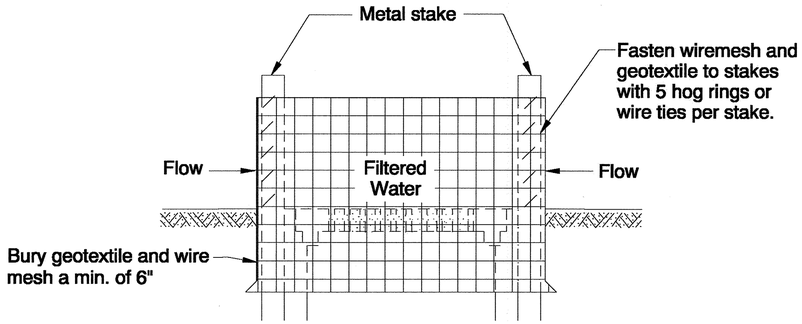

ELEVATION

SEDIMENT FENCE

TYPE 1

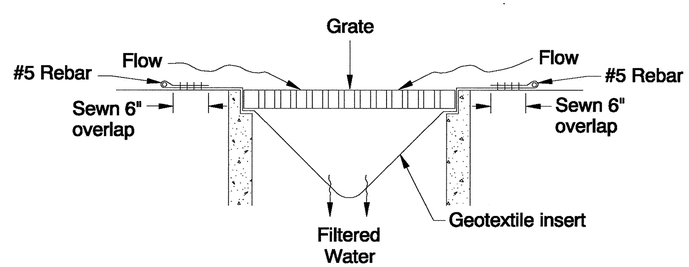

PREFABRICATED FILTER INSERT

TYPE 3

INLET PROTECTION

Site Conditions Where Types Are Appropriate	TYPE					
	1	2	3	4	5	6
Area Drain, Soil	Y	Y	Y	Y	Y	Y
Area Drain, Pavement	N	Y	Y	Y	Y	N
Ditch Inlet, Soil	Y	N	Y	Y	N	Y
Ditch Inlet, Pavement	N	N	Y	Y	N	N
Grate Inlet Along Curb, Soil	N	Y	Y	Y	Y	Y
Grate Inlet Along Curb, Pavement	N	Y	Y	Y	Y	N
Curb Opening Inlet, Soil	N	N	N	Y	Y	Y
Curb Opening Inlet, Pavement	N	N	N	Y	Y	N

For Inlet Protection Types 4 and 5 see RD1015 and RD1020.

Note:
Type 1 Sediment Fence
Type 2 Geotextile/wire mesh/aggregate
Type 3 Prefabricated filter insert
Type 4 Biofilter bags
Type 5 Masonry/aggregate
Type 6 Sod

CALC. BOOK NO. _____

BASELINE REPORT DATE _____

NOTE: All material and workmanship shall be in accordance with the current Oregon Standard Specifications

The selection and use of this Standard Drawing, while designed in accordance with generally accepted engineering principles and practices, is the sole responsibility of the user and should not be used without consulting a Registered Professional Engineer.

OREGON STANDARD DRAWINGS

INLET PROTECTION
(TYPE 1, 2 & 3)

2008

DATE	REVISION DESCRIPTION

Effective Date: December 1, 2012 - May 31, 2013

RD1010

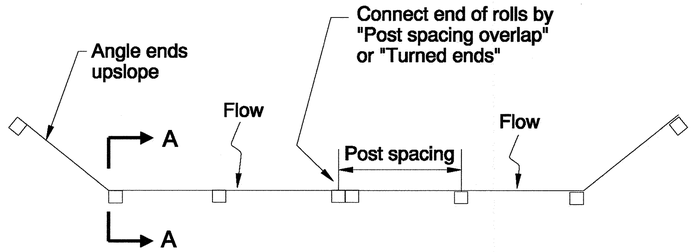

PLAN

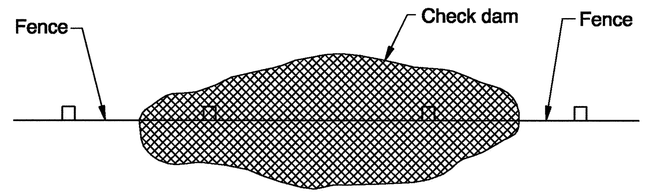

PLAN VIEW AT DITCH SECTION

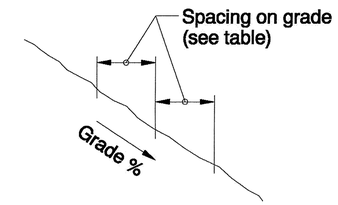

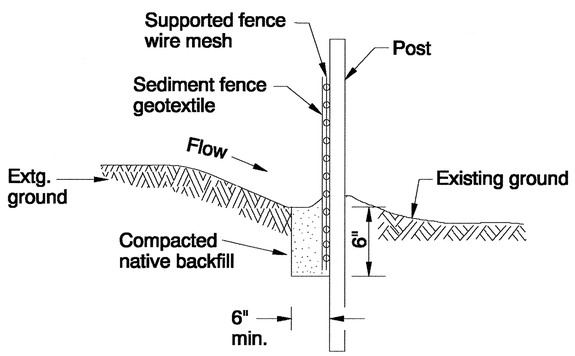

SECTION A-A

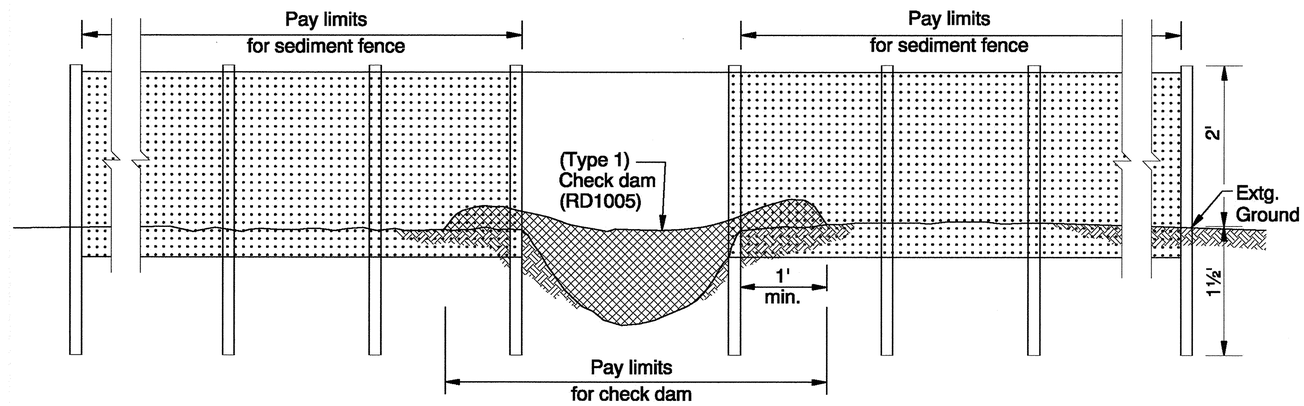

ELEVATION VIEW AT DITCH SECTION OR LOW AREAS

TABLE 1
FENCE SPACING FOR GENERAL APPLICATION

INSTALL PARALLEL ALONG CONTOURS AS FOLLOWS	
GRADE	MAXIMUM SPACING ON GRADE
Grade < 10%	300'
10% ≤ Grade < 15%	150'
15% ≤ Grade < 20%	100'
20% ≤ Grade < 30%	50'
30% ≤ Grade	25'

TABLE 2

POST SPACING	
4'	Supported Sediment Fence
6'	Unsupported Sediment Fence with Geotextile elongation *less than 50%
4'	Unsupported Sediment Fence with Geotextile elongation *more than 50%

* Geotextile grab elongation value as documented by "Level B" manufacturer's documentation (See Standard Specifications).

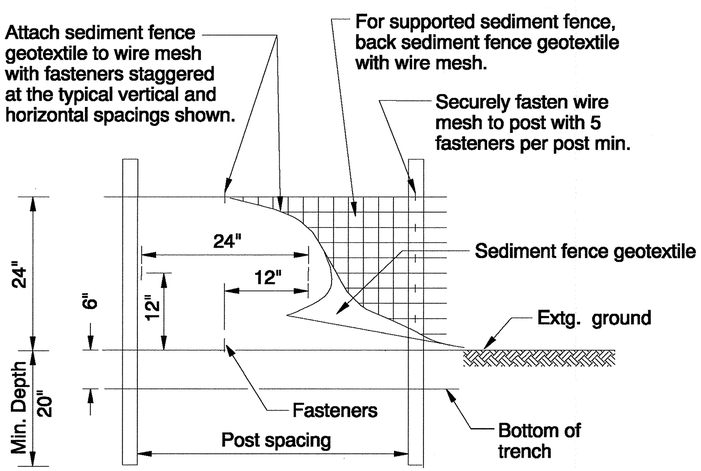

ELEVATION

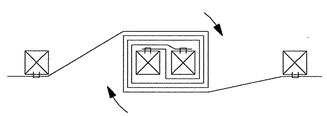

TURNED ENDS
1 59/64 Turns

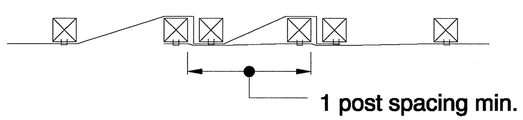

POST SPACING OVERLAP

GEOTEXTILE END CONNECTIONS

CALC. BOOK NO. _____

BASELINE REPORT DATE _____

NOTE: All material and workmanship shall be in accordance with the current Oregon Standard Specifications

The selection and use of this Standard Drawing, while designed in accordance with generally accepted engineering principles and practices, is the sole responsibility of the user and should not be used without consulting a Registered Professional Engineer.

OREGON STANDARD DRAWINGS

SEDIMENT FENCE, SUPPORTED
SEDIMENT FENCE, UNSUPPORTED

2008

DATE	REVISION DESCRIPTION

Effective Date: December 1, 2012 - May 31, 2013

RD1040

Plot Date: 2/11/2013 7:00:45 AM Filename: S:_IL_Design\T00121- 50's Bikeway Woodstock Blvd-Thompson St, SE-NE\CAD\PLAN_SHEETS\SHT RD 1040 OREGON STANDARD DRAWING\PLOT_SHT_ RDI040.dgn
rd1040.dgn 12-31-08
RD1040

W

4" WHITE LINE

W-2

8" WHITE LINE

Y

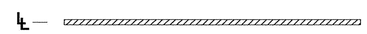

4" YELLOW LINE

CH

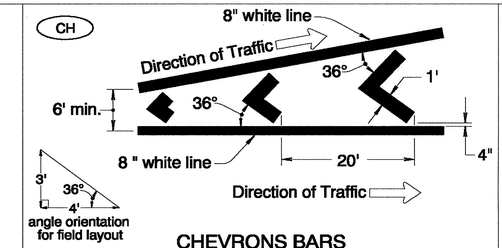

CHEVRONS BARS
1' WHITE BARS AT 20' SPACING

TM

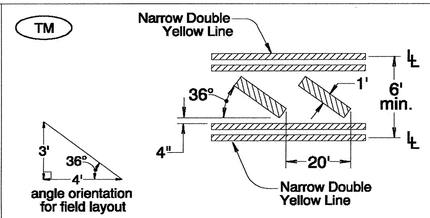

TRANSVERSE MEDIAN BARS
1' YELLOW BARS AT 20' SPACING

WB

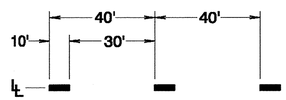

4" WHITE BROKEN LINE

YB

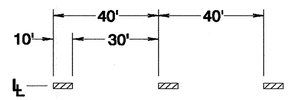

4" YELLOW BROKEN LINE

WD

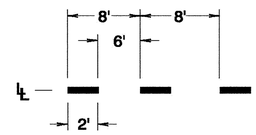

4" WHITE DOTTED LINE
For lane extensions

WD-2

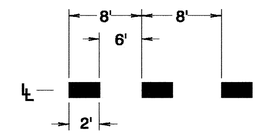

8" WHITE DOTTED LINE
For lane extensions and bike lane extensions

YD

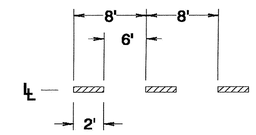

4" YELLOW DOTTED LINE
For lane extensions

DLL

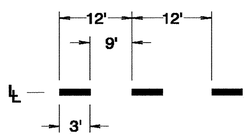

4" WHITE DOTTED LANE LINE
For lane lines in acceleration/deceleration lanes

DLL-2

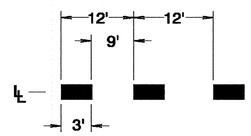

8" WHITE DOTTED LANE LINE
For lane lines in drop lanes

NPR

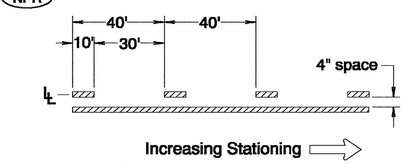

NO-PASS RIGHT
4 " YELLOW LINES

NPL

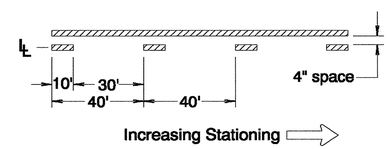

NO-PASS LEFT
4" YELLOW LINES

TWL

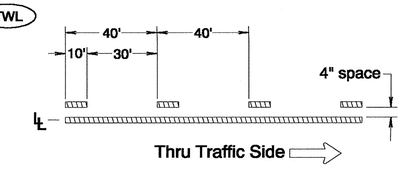

TWO-WAY LEFT TURN
4" YELLOW LINES

TM-40

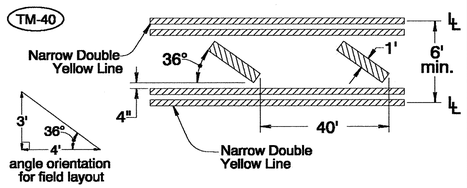

TRANSVERSE MEDIAN BARS
1' YELLOW BARS AT 40' SPACING
For use at painted medians where
distance between left turn refuges exceeds 200'

D

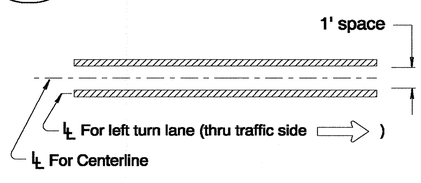

DOUBLE NO-PASS
TWO 4" YELLOW LINES

ND

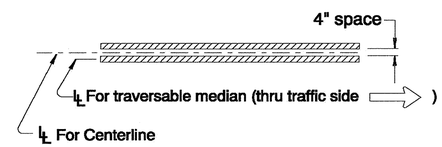

NARROW DOUBLE NO-PASS
TWO 4" YELLOW LINES

NDW

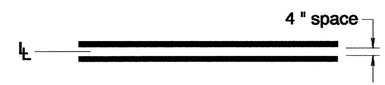

NARROW DOUBLE NO-LANE CHANGE
TWO 4" WHITE LINES

TS

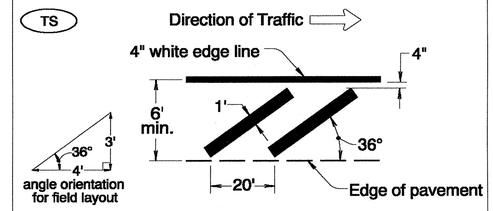

TRANSVERSE SHOULDER BARS
1' WHITE BARS AT 20' SPACING

HC

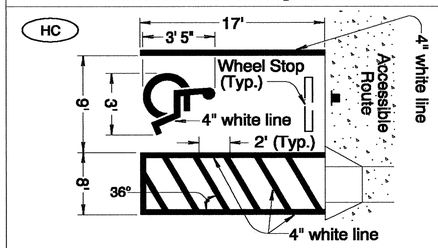

DISABLED PARKING DETAIL (white)

YLD

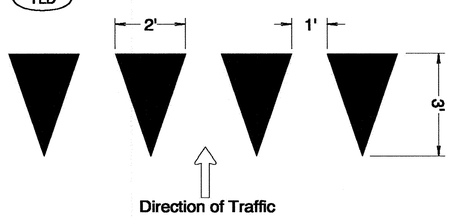

YIELD LINE (white)

BYLD

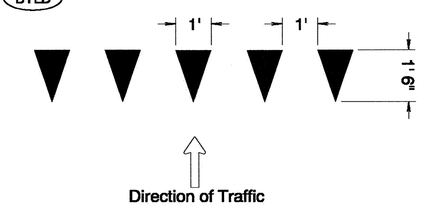

BIKE PATH YIELD LINE (white)

LEGEND

Direction Of Traffic, Increasing Stationing Or Thru Traffic Side

℄ — Lane line dimensions are shown on the striping plans

CALC. BOOK NO. N/A

BASELINE REPORT DATE 12/16/2011

NOTE: All material and workmanship shall be in accordance with the current Oregon Standard Specifications

The selection and use of this Standard Drawing, while designed in accordance with generally accepted engineering principles and practices, is the sole responsibility of the user and should not be used without consulting a Registered Professional Engineer.

OREGON STANDARD DRAWINGS

PAVEMENT MARKING
STANDARD DETAIL BLOCKS
2008

DATE	REVISION DESCRIPTION
1/2009	Modified NDW lane line location.
12/2010	Added new line type DLL and renamed LD line to DLL-2.
7/2011	Modified lane line for ND. Corrected height of the BYLD.
12/2011	Added note for DLL. Deleted sign numbers from HC. Revised graphics for CH, TM, DLL, DLL-2, TM-40, and HC.

RR

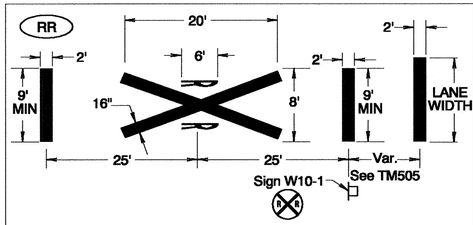

RAILROAD CROSSING (white)

Install per ODOT Rail Crossing Order or as shown.
For letter proportion details, see current version of Standard Highway Signs

NRR

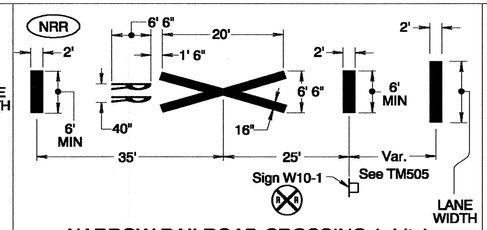

NARROW RAILROAD CROSSING (white)

Install per ODOT Rail Crossing Order or as shown.
For letter proportion details, see current version of Standard Highway Signs

BRR

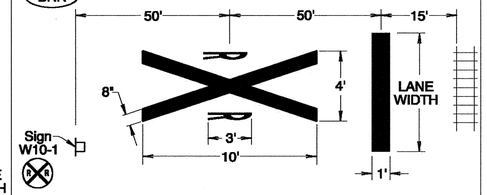

BIKE PATH RAILROAD CROSSING (white)

Install per ODOT Rail Crossing Order or as shown.
For letter proportion details, see current version of Standard Highway Signs

HOV

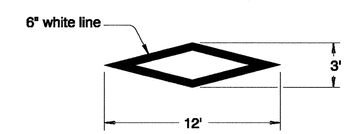

HIGH-OCCUPANCY VEHICLE DIAMOND DETAIL (white)

CG

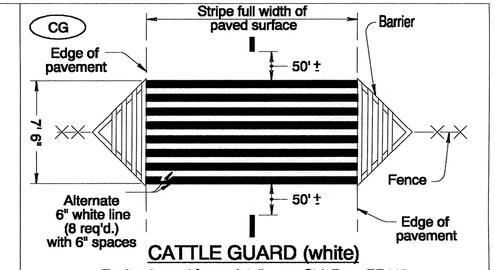

CATTLE GUARD (white)

For barrier and fence details, see Std. Dwg. RD110

SA

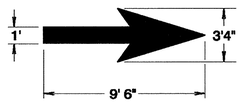

STRAIGHT ARROW (white)

For arrow proportion details, see current version of Standard Highway Signs

LA

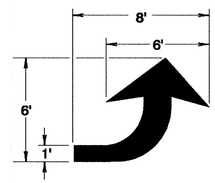

LEFT TURN ARROW (white)

For arrow proportion details, see current version of Standard Highway Signs

RA

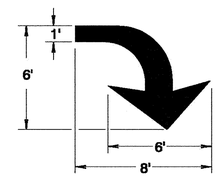

RIGHT TURN ARROW (white)

For arrow proportion details, see current version of Standard Highway Signs

LSA

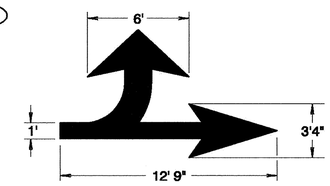

LEFT TURN STRAIGHT ARROW (white)

For arrow proportion details, see current version of Standard Highway Signs

RSA

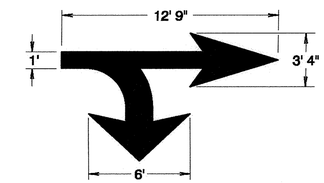

RIGHT TURN STRAIGHT ARROW (white)

For arrow proportion details, see current version of Standard Highway Signs

RALA

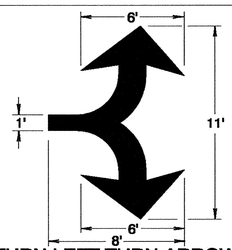

RIGHT TURN LEFT TURN ARROW (white)

For arrow proportion details, see current version of Standard Highway Signs

RSLA

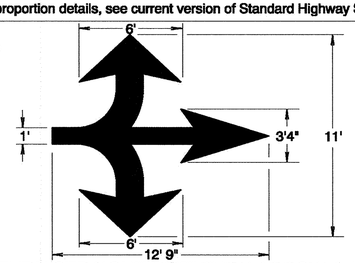

RIGHT TURN STRAIGHT LEFT TURN ARROW (white)

For arrow proportion details, see current version of Standard Highway Signs

E-SA

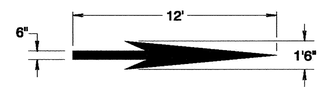

ELONGATED STRAIGHT ARROW (white)

For arrow proportion details, see current version of Standard Highway Signs

E-LA

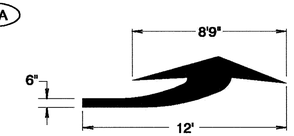

ELONGATED LEFT TURN ARROW (white)

For arrow proportion details, see current version of Standard Highway Signs

E-RA

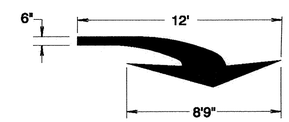

ELONGATED RIGHT TURN ARROW (white)

For arrow proportion details, see current version of Standard Highway Signs

E-LSA

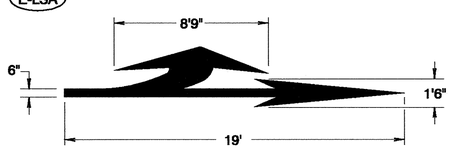

ELONGATED LEFT TURN STRAIGHT ARROW (white)

For arrow proportion details, see current version of Standard Highway Signs

E-RSA

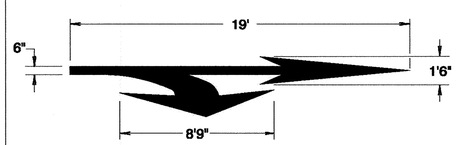

ELONGATED RIGHT TURN STRAIGHT ARROW (white)

For arrow proportion details, see current version of Standard Highway Signs

E-RALA

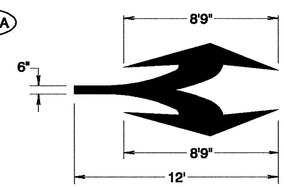

ELONGATED RIGHT TURN LEFT TURN ARROW (white)

For arrow proportion details, see current version of Standard Highway Signs

E-RSLA

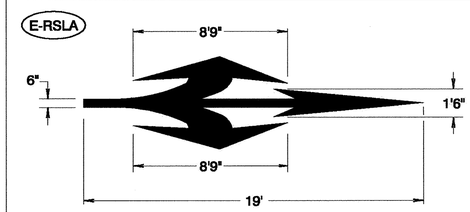

ELONGATED RIGHT TURN STRAIGHT LEFT TURN ARROW (white)

For arrow proportion details, see current version of Standard Highway Signs

LRA

Arrow orientation shown is used for right lane ends.

For left lane ends, use the mirror image.

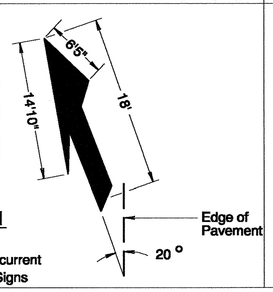

LANE REDUCTION ARROW (white)

For arrow proportion details, see current version of Standard Highway Signs

WWA

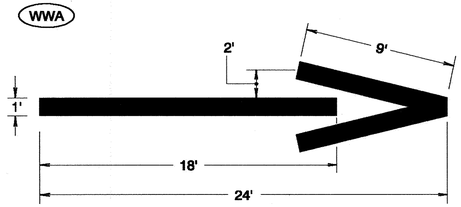

WRONG-WAY ARROW (white)

General Note:

1. Center pavement markings within the lane width.
2. Arrow and letter dimensions nominal, excluding WWA.

CALC. BOOK NO. N/A

BASELINE REPORT DATE 12/16/2011

NOTE: All material and workmanship shall be in accordance with the current Oregon Standard Specifications

The selection and use of this Standard Drawing, while designed in accordance with generally accepted engineering principles and practices, is the sole responsibility of the user and should not be used without consulting a Registered Professional Engineer.

OREGON STANDARD DRAWINGS

PAVEMENT MARKING STANDARD DETAIL BLOCKS

2008

DATE	REVISION DESCRIPTION
1/2009	Additional dimensions added to arrow detail blocks. Modified CG.
12/2010	Corrected the dimension of the arrow head on the left side of LRA.
12/2011	Deleted direction of traffic arrow for HOV. Deleted Legend.

TM501.dgn 12-16-2011

TM501

Plot Date: 2/11/2013 7:02:51 AM Filename: S:_II_Design\T00121- 50's Bikeway Woodstock Blvd-Thompson St, SE-NE\CAD\PLAN_SHEETS\SHT TM 501OREGON STANDARD DRAWING\PLOT_SHT_ TM 501.dgn

CW

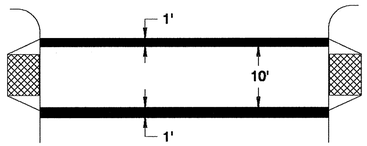

STANDARD CROSSWALK
TWO 1' WHITE BARS

Install per Standard Drawing TM530

CW-SC

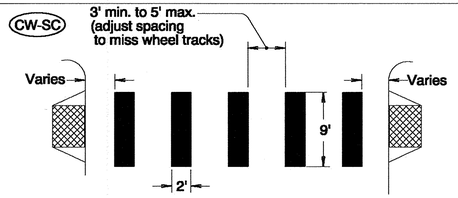

STAGGERED CONTINENTAL CROSSWALK
2' WHITE BARS

Install per Standard Drawing TM530

S

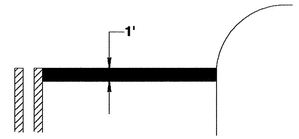

STOP BAR
1' WHITE BAR

Install per Standard Drawing TM530

S-2

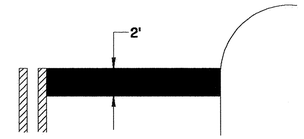

STOP BAR - LARGE
2' WHITE BAR

Install per Standard Drawing TM530

S-RM

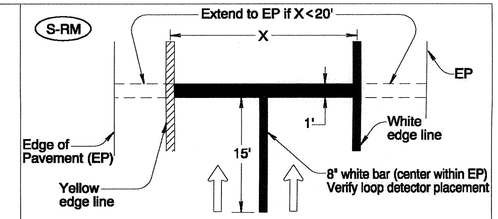

RAMP METER STOP BAR
1' & 8" WHITE BARS

For multi-lane ramp meter applications

BSR

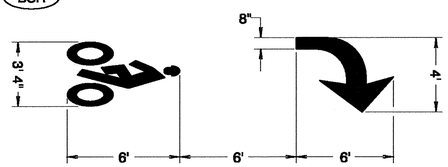

BIKE RIGHT TURN STENCIL (white)

Center marking within lane width
For proportion details, see current version of Standard Highway Signs

BS

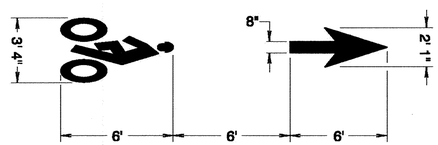

BIKE LANE STANDARD STENCIL (white)

Center marking within lane width
For proportion details, see current version of Standard Highway Signs

BSL

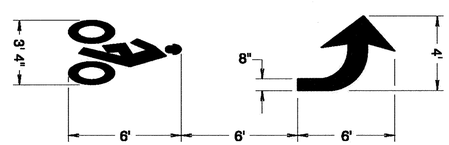

BIKE LEFT TURN STENCIL (white)

Center marking within lane width
For proportion details, see current version of Standard Highway Signs

P

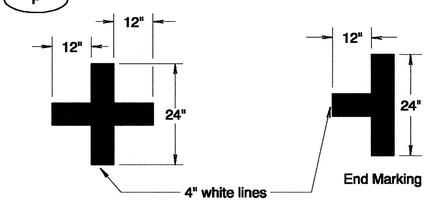

ON-STREET PARKING DETAIL (white)

BUS

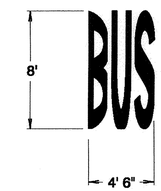

BUS (white)

Center marking within lane width
For letter proportion details, see current version of Standard Highway Signs

SCH

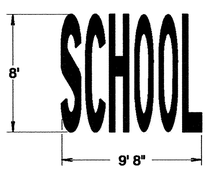

SCHOOL (white)

Center marking within lane width
For letter proportion details, see current version of Standard Highway Signs

SCH-LG

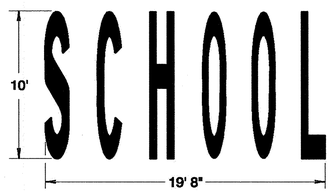

SCHOOL - LARGE (white)

Center marking within width of two lanes
For letter proportion details, see current version of Standard Highway Signs

CRS-LG

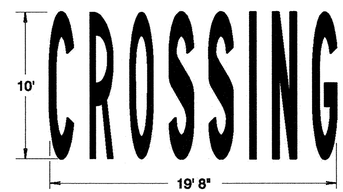

CROSSWALK - LARGE (white)

Center marking within width of two lanes
For letter proportion details, see current version of Standard Highway Signs

XNG

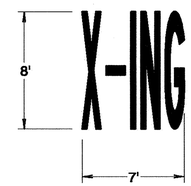

X-ING (white)

Center marking within lane width
For letter proportion details, see current version of Standard Highway Signs

ON

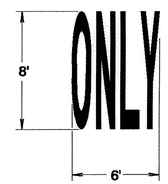

ONLY (white)

Center marking within lane width
For letter proportion details, see current version of Standard Highway Signs

General Note:

1. Arrow, letter, and bike symbol dimensions nominal.

LEGEND

⇦ Direction of Travel

CALC. BOOK NO. N/A

BASELINE REPORT DATE 7/6/2009

NOTE: All material and workmanship shall be in accordance with the current Oregon Standard Specifications

The selection and use of this Standard Drawing, while designed in accordance with generally accepted engineering principles and practices, is the sole responsibility of the user and should not be used without consulting a Registered Professional Engineer.

OREGON STANDARD DRAWINGS

PAVEMENT MARKING
STANDARD DETAIL BLOCKS
2008

DATE	REVISION DESCRIPTION
1/2009	Modified S-RM detail block.
7/2009	Added general note 1

Effective Date: December 1, 2012 - May 31, 2013

TM503

SH

SPEED HUMP (white)

Center marking within lane width

For letter proportion details, see current version of Standard Highway Signs

SH-W

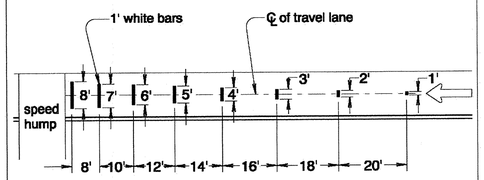

SPEED HUMP ADVANCE WARNING MARKING (white)

SH-CL

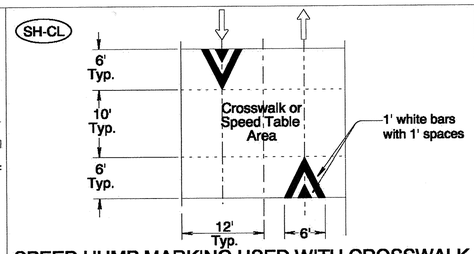

SPEED HUMP MARKING USED WITH CROSSWALK LEADING EDGE (white)

SH-CS

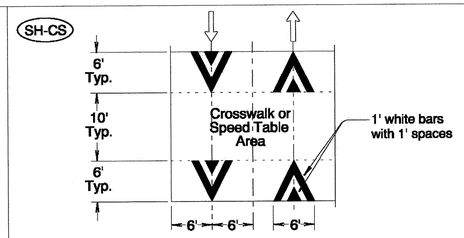

SPEED HUMP MARKING USED WITH CROSSWALK SYMMETRIC LEADING & TRAILING EDGES (white)

SH-A

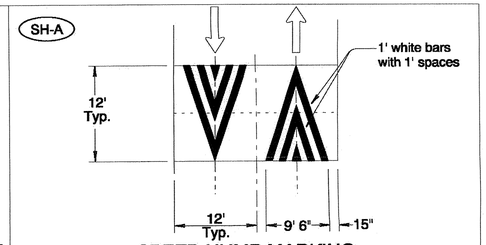

SPEED HUMP MARKING ASYMMETRIC LEADING & TRAILING EDGES (white)

SH-L

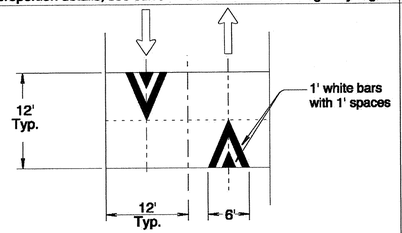

SPEED HUMP MARKING LEADING EDGE (white)

SH-S

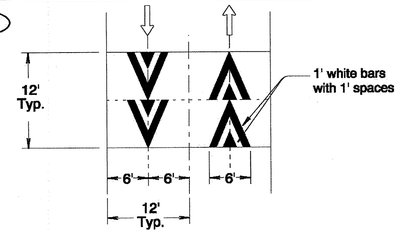

SPEED HUMP MARKING SYMMETRIC LEADING & TRAILING EDGES (white)

CW-SC2

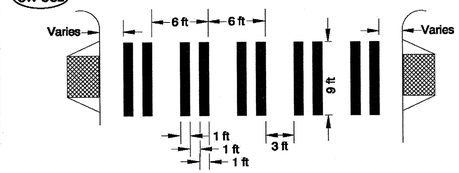

STAGGERED CONTINENTAL CROSSWALK

1 ft WHITE BARS

Install per Standard Drawing TM530

SLM

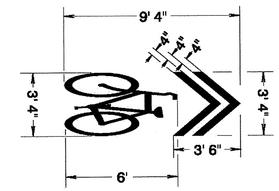

SHARED LANE MARKING (white)

For proportion details, see current version of Standard Highway Signs

YB-SP

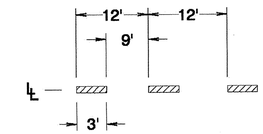

SHARED PATH BROKEN LINE

4" YELLOW LINE

For use on shared-use paths.

NOTE TO DESIGNERS:

1.) Raised Pavement Marker Substitution details should no longer be used on state highways. Consider durable profiled lines instead.

2.) Speed hump markings generally not used on state highway right-of-way.

3.) When continental style crosswalks are to be installed on a project (this may require Region Traffic Engineer approval depending on the situation. See Traffic Line Manual for further information), do not use CW-SC2 in Regions 1 thru 4. Only use CW-SC2 in Region 5 if the region striping manager approves, otherwise use the standard CW-SC shown in Standard Drawing TM503.

4) Shared Lane Marking should not be used on roadways with a speed limit above 35 mph.

WB RB-FE

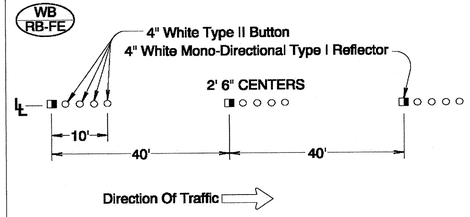

4" WHITE BROKEN LINE SUBSTITUTION REFLECTOR/BUTTON (for freeways & expressways)

WB RB-R

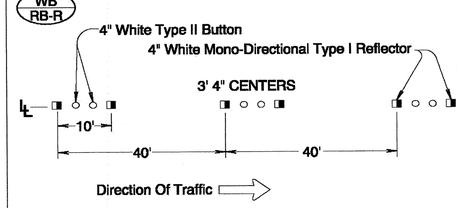

4" WHITE BROKEN LINE SUBSTITUTION REFLECTOR / BUTTON (for rural highways)

WB RB-U

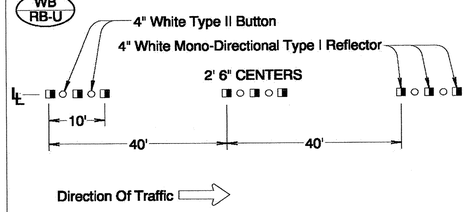

4" WHITE BROKEN LINE SUBSTITUTION REFLECTOR / BUTTON (for urban highways)

YB RB-R

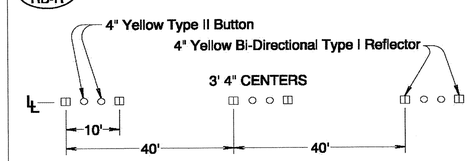

4" YELLOW BROKEN LINE SUBSTITUTION REFLECTOR / BUTTON (for rural highways)

YB RB-U

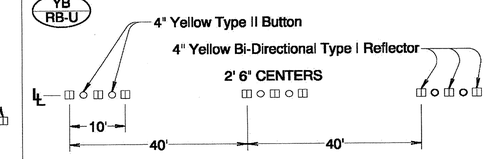

4" YELLOW BROKEN LINE SUBSTITUTION REFLECTOR / BUTTON (for urban highways)

LD RB-3

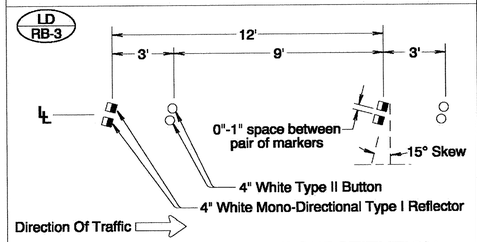

8" WHITE LANE DROP LINE SUBSTITUTION REFLECTOR / BUTTON

W-2 RB-5

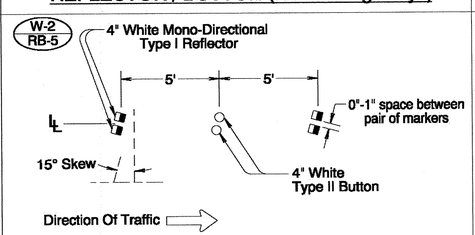

8" WHITE LINE SUBSTITUTION REFLECTOR / BUTTON

General note:

1.) Surface mount Raised Pavement Markers (RPMs) unless otherwise specified.

LEGEND

⇦ Direction Of Travel, Increasing Stationing Or Thru Traffic Side.

℄ Lane line dimensions are shown on the striping plans.

◨ Mono-directional crystal white marker reflects white to the left in this symbol

◫ Bi-directional yellow marker reflects yellow both left and right in this symbol

The selection and use of this detail, while designed in accordance with generally accepted engineering principles and practices, is the sole responsibility of the user and should not be used without consulting a Registered Professional Engineer.

OREGON DEPARTMENT OF TRANSPORTATION
TECHNICAL SERVICES
DETAILS

PAVEMENT MARKING DETAIL BLOCKS

DETAIL NO. DET4560

Plot Date: 2/12/13 10:40 AM Filename: S:_IL_Design\T00121 - 50's Bikeway Woodstock Blvd-Thompson St, SE-NE\CAD\PLAN_SHEETS\SHT_DET_4560_OREGON_STANDARD_DETAIL\PLOT_SHT_ DET4560.dgn
02-12-2013
det4560.dgn
DET4560