2.3.5 Private Presumptive and Performance Stormwater Facility Typical Details

Table of Contents

SW-200 - Ecoroof

SW-201 - Habitat Ecoroof

SW-210 - Pervious Pavement

SW-220 - Swale - Lined

SW-221 - Swale - Unlined

SW-230 - Planter - Lined

SW-231 - Planter - Unlined

SW-240 - Basin - Lined

SW-241 - Basin - Unlined

SW-250 - Facility Overflow Configurations

SW-251 - Facility Overflow Configuration E

SW-252 - Facility Overflow Configuration F

SW-260 - Filter Strip

SW-270 - Soakage Trench

SW-280 - Drywell

SW-290 - Sand Filter - Infiltration

SW-291 - Sand Filter - Sub-Surface

– DRAWING NOT TO SCALE –

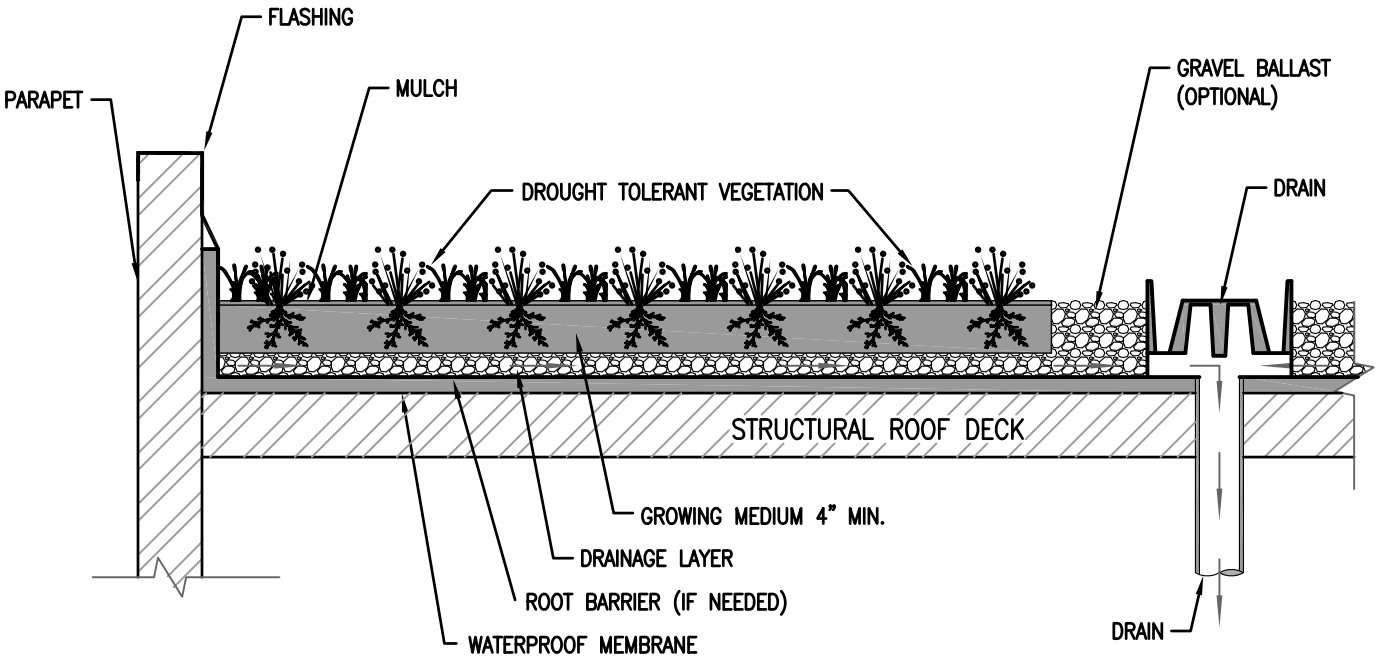

ECOROOF WITH DRAINAGE LAYER

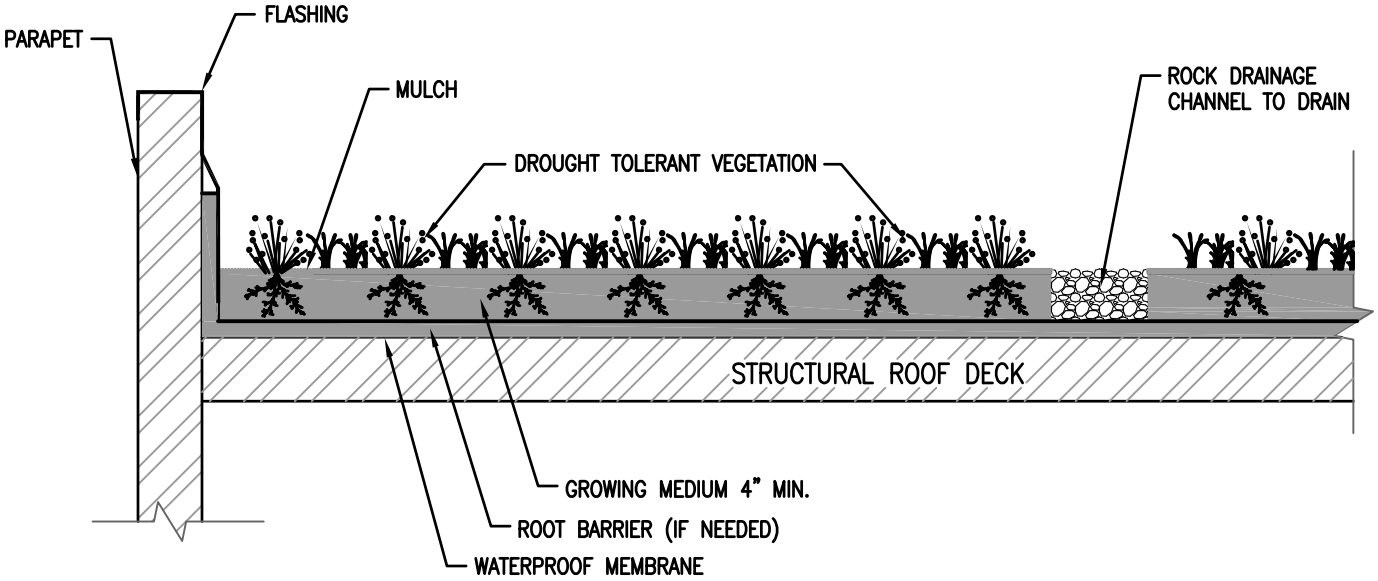

ECOROOF WITH DRAINAGE CHANNELS

- DRAWING NOT TO SCALE -

STORMWATER MANAGEMENT TYPICAL DETAILS

– Performance Design Approach –

Ecoroof

Bureau of Environmental Services

NUMBER

SW–200

7–1–16

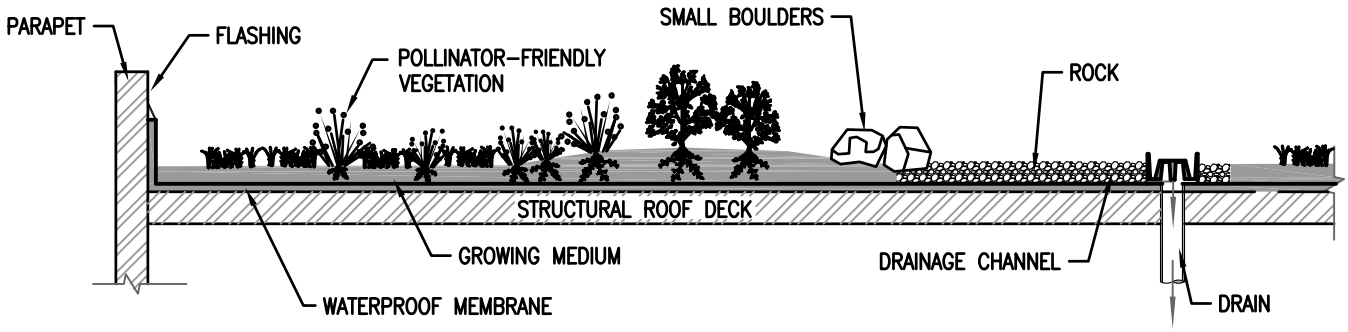

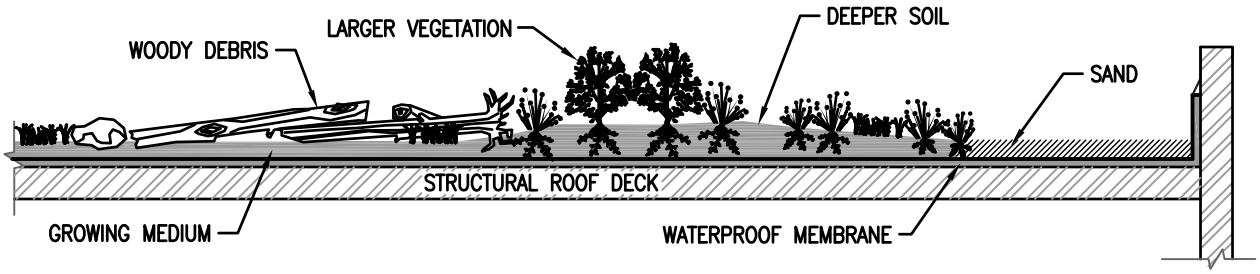

HABITAT ECOROOF EXAMPLE SECTIONS

NOTE: Building elements such as glass and lighting placed near ecoroofs have the potential to exacerbate bird–srike mortality. BES recommends designs comply with Portland's Resource Guide for Bird–Friendly Building Design: http://www.portlandoregon.gov/bps/article/446308

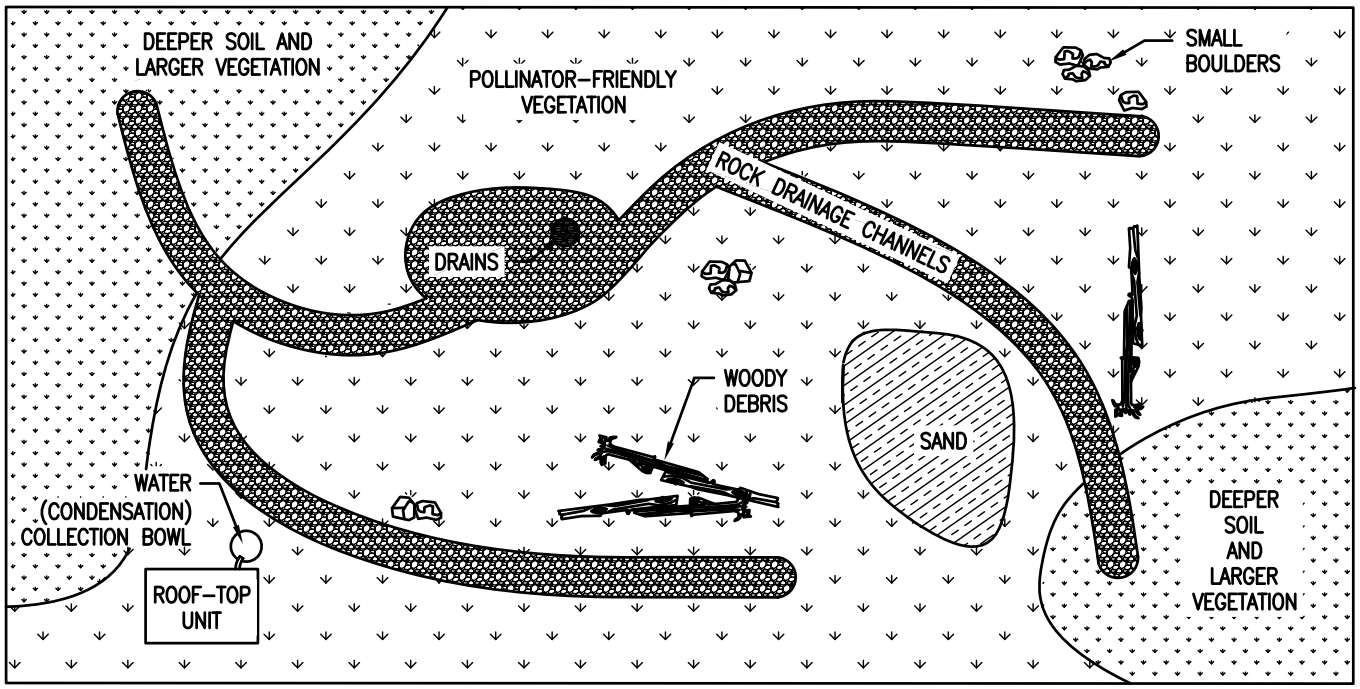

HABITAT ECOROOF WITH DRAINAGE CHANNELS – EXAMPLE PLAN

– DRAWING NOT TO SCALE –

STORMWATER MANAGEMENT TYPICAL DETAILS

– Performance Design Approach –

Habitat Ecoroof

Bureau of Environmental Services

NUMBER

SW–201

7–1–16

DETAIL INTENDED AS AN EXAMPLE. DETAIL MUST MATCH PAC ASSUMPTIONS AND/OR DESIGN REPORT.

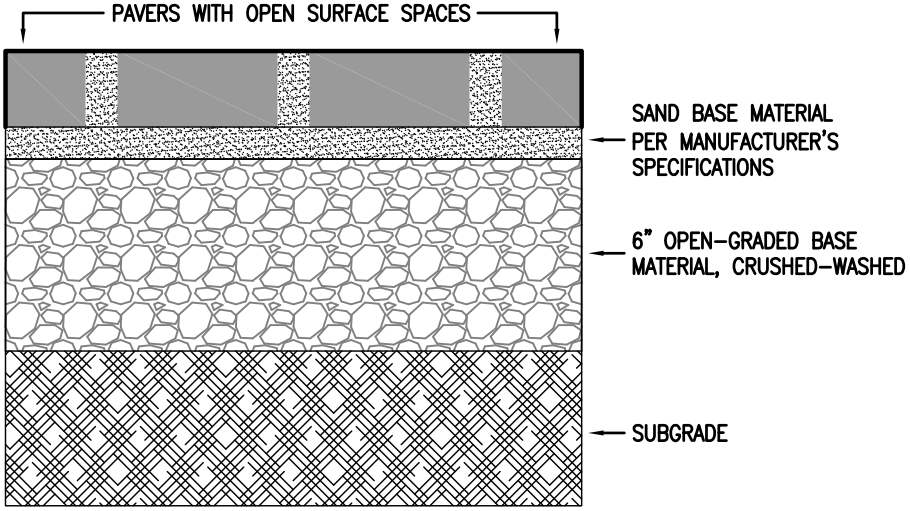

PERMEABLE CONCRETE BLOCK OR "PAVER" SYSTEMS

1. Detail intended as an example. Detail must match design report.
2. Pervious pavement for public streets is a case-by-case basis.
3. For all applications, pavement designs must be prepared by a registered professional engineer.

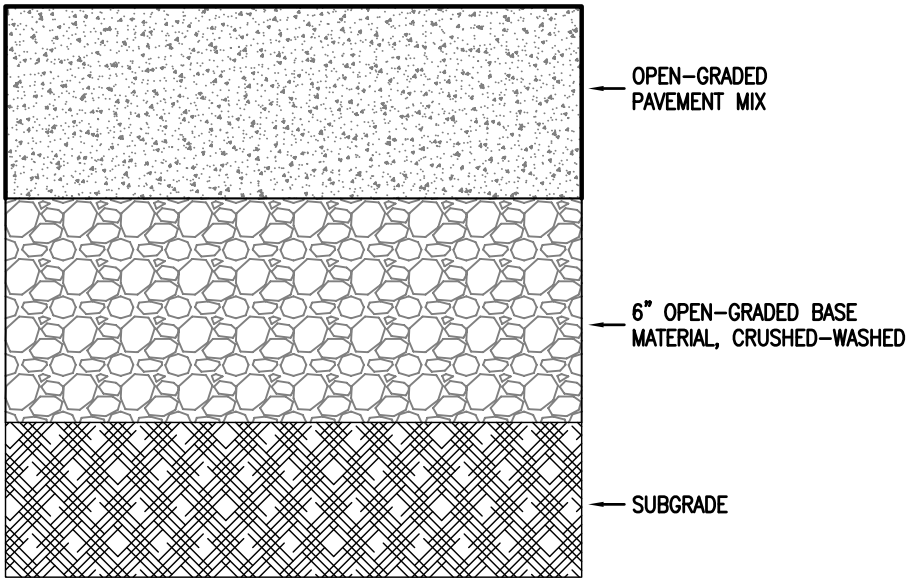

PERVIOUS (OPEN GRADED) CONCRETE AND ASPHALT SYSTEMS

- DRAWING NOT TO SCALE -

STORMWATER MANAGEMENT TYPICAL DETAILS

– Performance Design Approach –

Pervious Pavement

Bureau of Environmental Services

NUMBER

SW–210

7–1–16

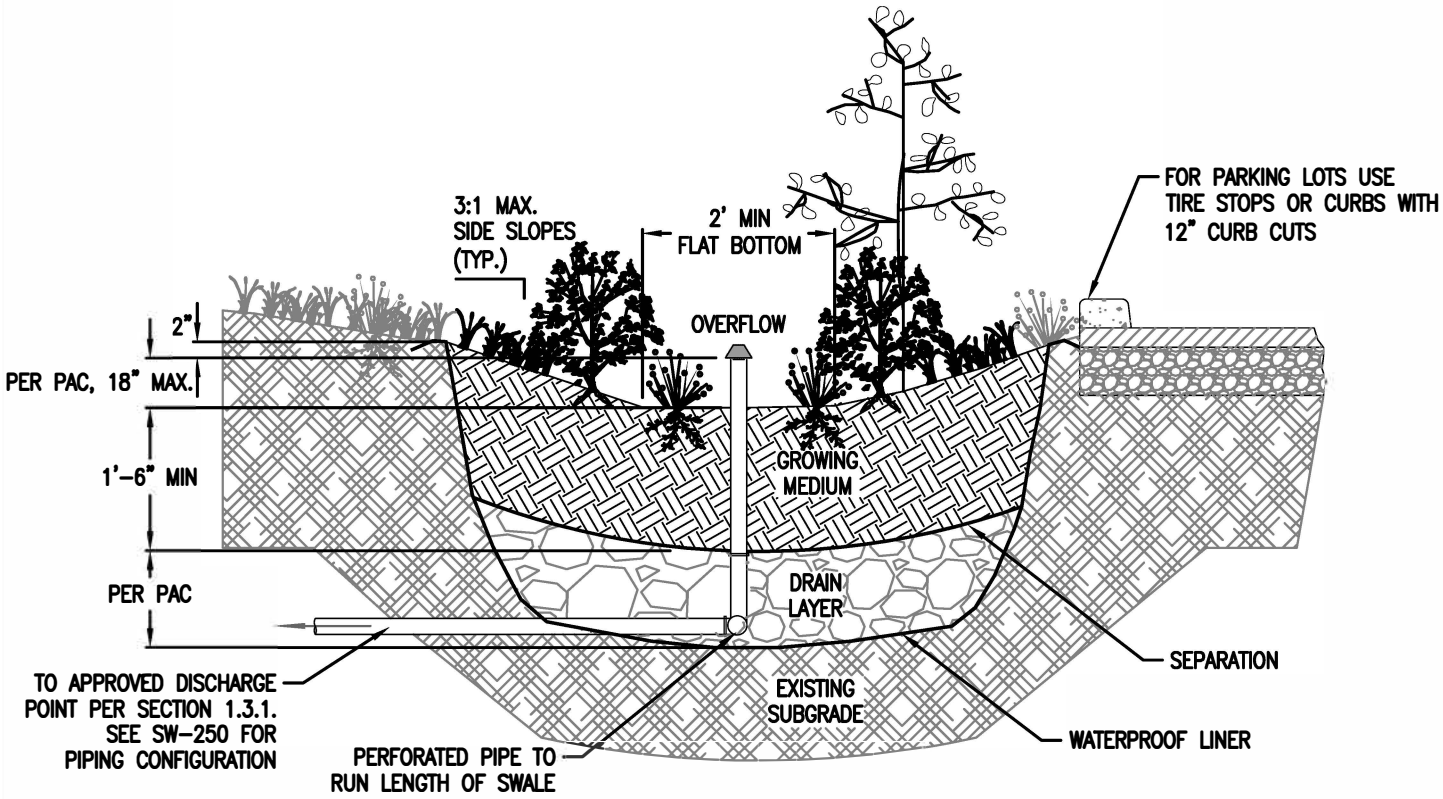

NOTES:

1. Detail intended as an example. Detail must match PAC assumptions and/or design report.

2. Dimensions:
   Width of swale: 6'-6" minimum
   Depth of swale (from top of growing medium to overflow elevation): per PAC
   Longitudinal slope of swale: 6.0% or less.
   Flat bottom width: 2' minimum.
   Side slopes of swale: per PAC, 3:1 maximum.

3. Setbacks:
   None required.

4. Overflow:
   Swales must connect to approved discharge point according to SWMM Section 1.3.1.
   Inlet elevation must allow for 2" of freeboard, minimum.
   Protect from debris and sediment with strainer or grate.

5. Piping must be ABS Sch.40, cast iron, or PVS Sch.40. 3" pipe required for facilities draining up to 1500 s.f., otherwise 4" min. pipe. Piping must have 1% grade and follow the Uniform Plumbing Code.

6. Drain Layer:
   Determined by designer. Options include, but are not limited to drain mat, 3/4" washed round rock, or other approved system.
   Separation between drain and growing medium:
   Use appropriate filter fabric or a gravel lens (3/4 - 1/4 inch washed, rock 2 to 3 inches deep), or as per approved design.

7. Growing Medium:
   18" minimum depth. Use sand/loam/compost 3-way mix, or approved mix that will support healthy plants.
   24" minimum depth is required If the lined facility is also meeting BDS landscape requirements.

8. Vegetation: Follow landscape plans otherwise refer to plant list in SWMM, Section 2.4.1. Minimum container size is #1 container. # of plantings per 100sf of facility area:
   Zone A (wet): 80 herbaceous plants OR 72 herbaceous plants and 4 small shrubs.
   Zone B (moderate to dry): 7 large or small shrubs AND 70 groundcover plants.
   The delineation between Zone A and B must be either at the outlet elevation or the check dam elevation, whichever is lowest.
   If project area is over 200 sf consider adding a tree.

9. Check Dams: Must be placed per PAC and be equal to the width of the swale.

10. Waterproof Lner: 30 mil EPDM, HDPE or approved equivalent.

11. Splash Block: Install 4-6" washed river rock or splash pad for erosion control at inlets and downspout.

12. Inspections: Call BDS IVR Inspection Line, (503) 823-7000, request 487. 3 inspections required.

- DRAWING NOT TO SCALE -

STORMWATER MANAGEMENT TYPICAL DETAILS

- Presumptive and Performance Design Approach -

Swale - lined

Bureau of Environmental Services

NUMBER

SW-220

7-1-16

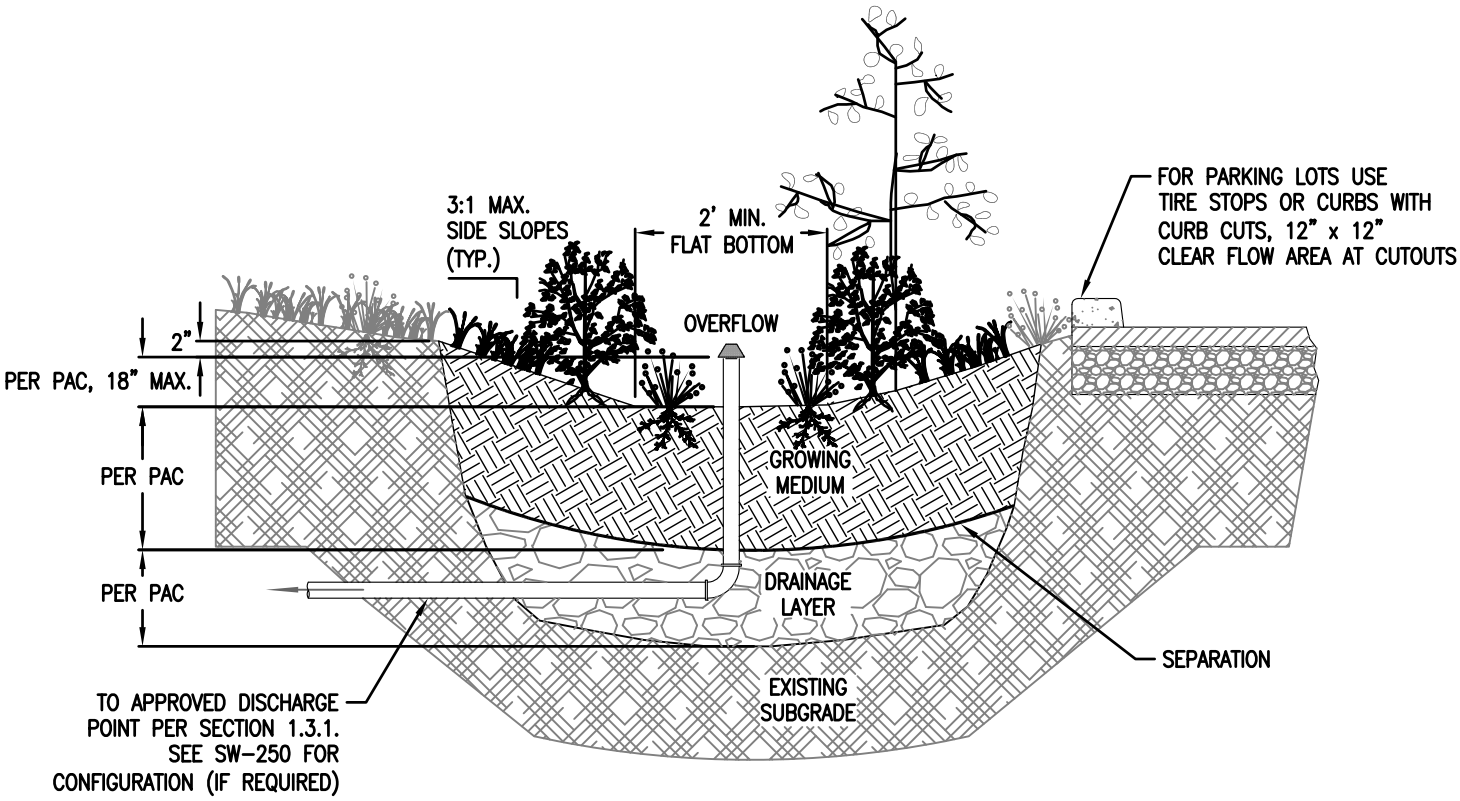

1. Detail intended as an example. Detail must match PAC assumptions and/or design report.

2. Provide protection from all vehicle traffic, equipment staging, and foot traffic in proposed infiltration areas prior to, during, and after construction.

3. Dimensions:
   Width of swale: 6'-6" minimum
   Depth of swale (from top of growing medium to overflow elevation): per PAC
   Longitudinal slope of swale: 6.0% or less.
   Flat bottom width: 2' minimum.
   Side slopes of swale: per PAC, 3:1 maximum.

4. Setbacks:
   Swale must be 10' away from foundation and 5' away from property lines.

5. Overflow:
   Swales must connect to approved discharge point according to SWMM Section 1.3.
   Inlet elevation must allow for 2" of freeboard, minimum.
   Protect from debris and sediment with strainer or grate.

6. Piping must be ABS Sch.40, cast iron, or PVS Sch.40. 3" pipe required for facilities draining up to 1500 s.f., otherwise 4" min. pipe. Piping must have 1% grade and follow the Uniform Plumbing Code.

7. Drain Layer: If needed 3/4" – 1 ½" washed rock or as approved. Depth per PAC.

8. Separation between drain rock and growing medium: if needed pea gravel lens, 2 to 3 inches deep or as approved.

9. Growing Medium:
   Use sand/loam/compost 3-way mix, or approved mix that will support healthy plants. 18" minimum depth if there is a drainage layer. If soils are well draining and there is not a drainage layer depth may be reduced as approved.

10. Vegetation: Follow landscape plans otherwise refer to plant list in SWMM, section 2.4.1. Minimum container size is #1 container. # of plantings per 100sf of facility area:
    Zone A (wet): 80 herbaceous plants OR 72 herbaceous plants and 4 small shrubs.
    Zone B (moderate to dry): 7 large or small shrubs AND 70 groundcover plants.
    The delineation between Zone A and B must be either at the outlet elevation or the check dam elevation, whichever is lowest.
    If project area is over 200sf consider adding a tree.

11. Check Dams: Must be placed per PAC and be equal to the width of the swale.

12. Splash Block: Install 4-6" washed river rock or splash pad for erosion control at inlets and downspout.

13. Inspections: Call BDS IVR Inspection Line, (503) 823-7000, request 487. 3 inspections required.

– DRAWING NOT TO SCALE –

STORMWATER MANAGEMENT TYPICAL DETAILS

– Presumptive and Performance Design Approach –

Swale – unlined

Bureau of Environmental Services

NUMBER

SW-221

7-1-16

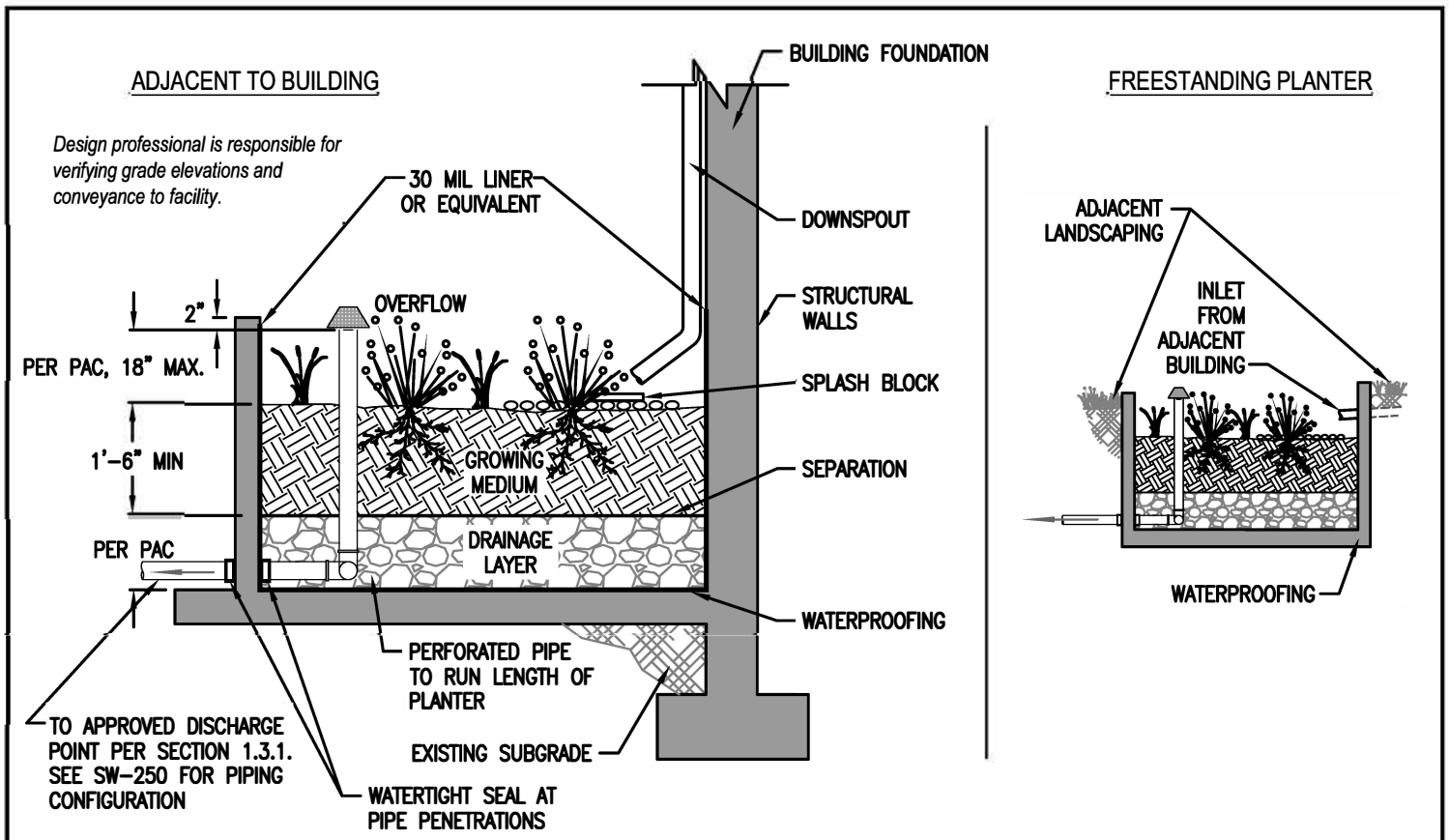

1. Detail intended as an example. Detail must match PAC assumptions and/or design report.

2. Dimensions:
   Width of planter: 24" minimum.
   Depth of planter (from top of growing medium to overflow elevation): per PAC calculations.
   Longitudinal slope of planter: 0.5% or less.

3. Setbacks:
   Planters must be less than 30" in height above finish grade if within 5-feet of property line.

4. Planter Walls:
   Material must be monolithically poured concrete, unless otherwise approved. Walls must be included on foundation plans.

5. Waterproofing:
   If planter is monolithically poured no additional liner/waterproofing is required. Check state structural requirements for foundations.

6. Piping must be ABS Sch.40, cast iron, or PVS Sch.40. 3" pipe required for facilities draining up to 1500 s.f., otherwise 4" min. pipe. Piping must have 1% grade and follow the Uniform Plumbing Code.

7. Drain Layer:
   Determined by designer. Options include, but are not limited to drain mat, 3/4" washed round rock, or other approved system.
   Separation between drain and growing medium:
   Use appropriate filter fabric or a gravel lens (3/4 – 1/4 inch washed, crushed rock 2 to 3 inches deep), or as per approved design.

8. Overflow:
   Inlet elevation must allow for 2" of freeboard, minimum.
   Protect from debris and sediment with strainer or grate.

9. Growing Medium:
   18" minimum depth. Use sand/loam/compost 3-way mix, or approved mix that will support healthy plants.
   24" minimum depth is required if the lined facility is also meeting BDS landscape requirements.

10. Vegetation: Refer to plant list in SWMM, Section 2.4.1. Minimum container size is #1 container. # of plantings per 100sf of facility area:
    80 herbaceous plants OR;
    72 herbaceous plants and 4 small shrubs.

11. Splash Block: Install 4-6" washed river rock or splash pad for erosion control at inlets and downspout.

12. Inspections: Call BDS IVR Inspection Line, (503) 823-7000, request 487. 3 inspections required.

- DRAWING NOT TO SCALE -

STORMWATER MANAGEMENT TYPICAL DETAILS

– Presumptive and Performance Design Approach –

Planter – lined

Bureau of Environmental Services

NUMBER

SW-230

7-1-16

ADJACENT TO LANDSCAPING

Design professional is responsible for verifying that grades will allow piped conveyance to facility.

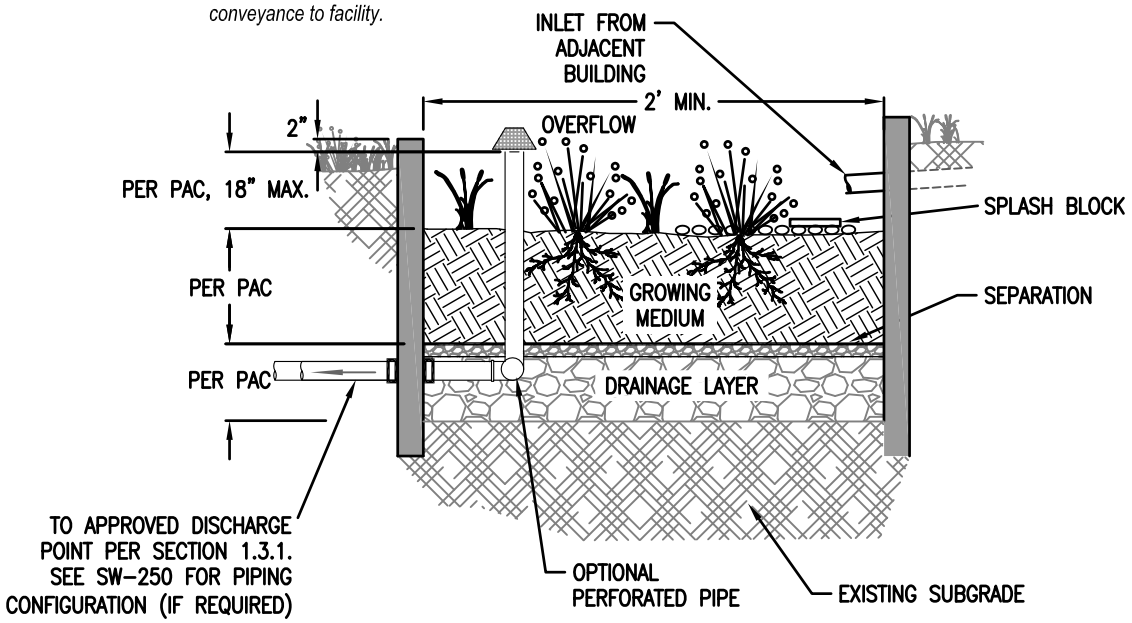

1. Detail intended as an example. Detail must match PAC assumptions and/or design report.

2. Provide protection from all vehicle traffic, equipment staging, and foot traffic in proposed infiltration areas prior to, during, and after construction.

3. Dimensions:
   Width of planter: 24" minimum.
   Depth of planter (from top of growing medium to overflow elevation): per PAC calculations.
   Longitudinal slope of planter: 0.5% or less.

4. Setbacks:
   Planters must be 5-feet from property line and 10-feet from building foundations.

5. Planter Walls:
   Material must be concrete, unless otherwise approved.

6. Piping must be ABS Sch.40, cast iron, or PVS Sch.40. 3" pipe required for facilities draining up to 1500 s.f., otherwise 4" min. pipe. Piping must have 1% grade and follow the Uniform Plumbing Code.

7. Drain Layer:
   Per PAC calculations. Options include, but are not limited to drain mat, 3/4" washed rock, or other approved system.
   Separation between drain and growing medium:
   Use appropriate filter fabric or a gravel lens (3/4 – 1/4 inch washed, crushed rock 2 to 3 inches deep), or as per approved design.

8. Overflow:
   Inlet elevation must allow for 2" of freeboard, minimum.
   Protect from debris and sediment with strainer or grate.

9. Growing Medium:
   Use sand/loam/compost 3-way mix, or approved mix that will support healthy plants. 18" minimum depth if there is a drainage layer. If soils are well draining and there is not a drainage layer depth may be reduced as approved.

10. Vegetation: Refer to plant list in SWMM, Section 2.4.1. Minimum container size is #1 container. # of plantings per 100sf of facility area:
    80 herbaceous plants OR;
    72 herbaceous plants and 4 small shrubs.

11. Splash Block: Install 4-6" washed river rock or splash pad for erosion control at inlets and downspout.

12. Inspections: Call BDS IVR Inspection Line, (503) 823-7000, request 487. 3 inspections required.

– DRAWING NOT TO SCALE –

STORMWATER MANAGEMENT TYPICAL DETAILS

– Presumptive and Performance Design Approach –

Planter – unlined

Bureau of Environmental Services

NUMBER

SW-231

7-1-16

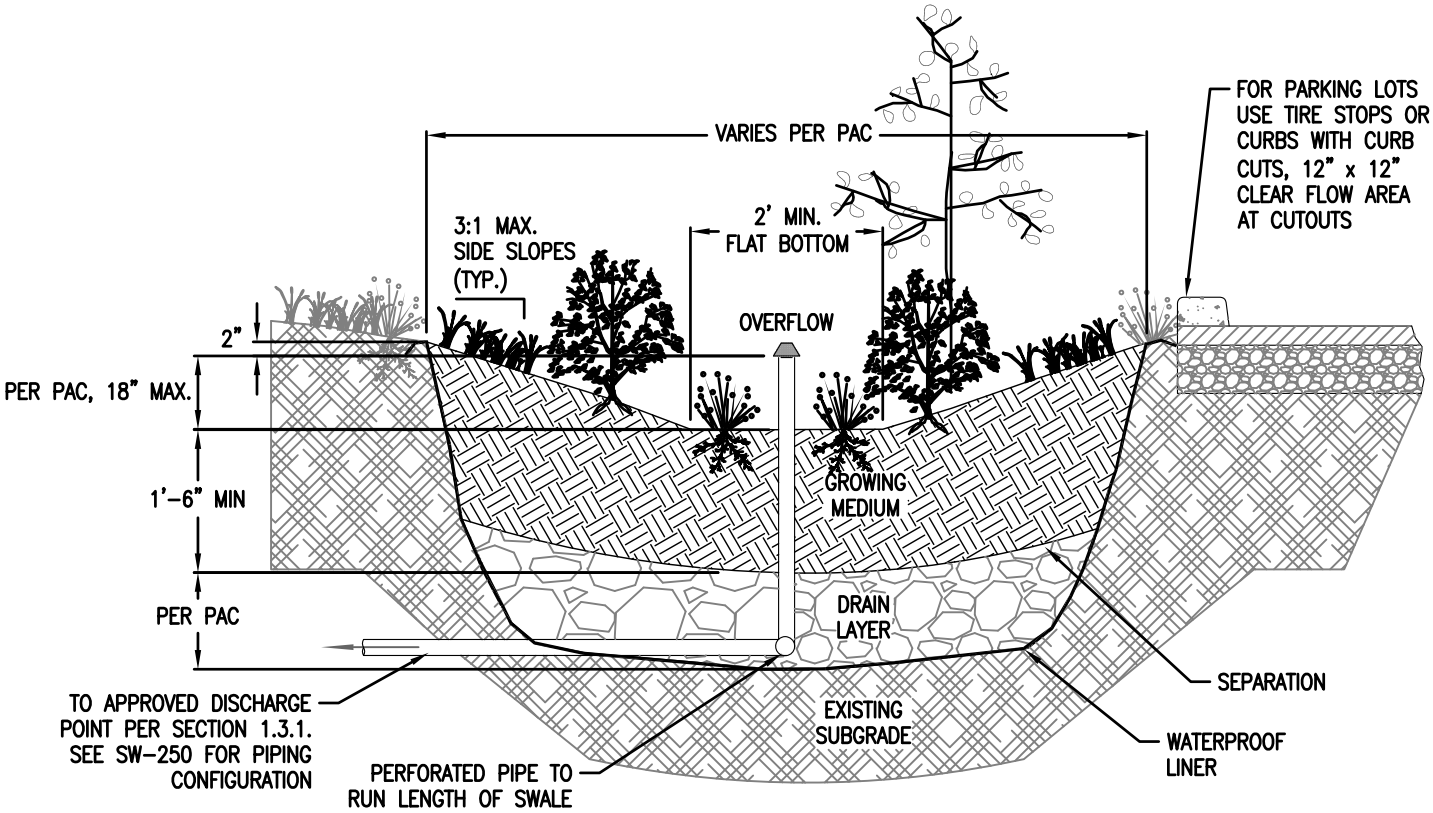

1. Detail intended as an example. Detail must match PAC assumptions and/or design report.

2. Dimensions:
   Width of basin: 5' minimum
   Depth of basin (from top of growing medium to overflow elevation): per PAC
   Flat bottom width: 2' minimum.
   Side slopes of swale: Per PAC, 3:1 maximum.

3. Setbacks: None required.

4. Overflow:
   Basins must connect to approved discharge point according to SWMM Section 1.3.
   Inlet elevation must allow for 2" of freeboard, minimum.
   Protect from debris and sediment with strainer or grate.

5. Piping must be ABS Sch.40, cast iron, or PVS Sch.40. 3" pipe required for facilities draining up to 1500 s.f., otherwise 4" min. pipe. Piping must have 1% grade and follow the Uniform Plumbing Code.

6. Drain Layer:
   Determined by designer. Options include, but are not limited to drain mat, 3/4" washed round rock, or other approved system.

7. Separation between drain and growing medium:
   Use appropriate filter fabric or a gravel lens (3/4 – 1/4 inch washed, crushed rock 2 to 3 inches deep), or as per approved design.

8. Growing Medium:
   18" minimum depth. Use sand/loam/compost 3-way mix, or approved mix that will support healthy plants.
   24" minimum depth is required If the lined facility is also meeting BDS landscape requirements.

9. Vegetation: Follow landscape plans otherwise refer to plant list in SWMM Section 2.4.1. Minimum container size is #1 container. # of plantings per 100sf of facility area:
   Zone A (wet): 80 herbaceous plants OR 72 herbaceous plants and 4 small shrubs.
   Zone B (moderate to dry): 7 large or small shrubs AND 70 groundcover plants.
   The delineation between Zone A and B shall be either at the outlet elevation or the check dam elevation, whichever is lowest.
   If project area is over 200sf consider adding a tree.

10. Waterproof Liner: 30 mil EPDM, HDPE or approved equivalent.

11. Splash Block: Install 4-6" washed river rock or splash pad for erosion control at inlets and downspout.

12. Inspections: Call BDS IVR Inspection Line, (503) 823-7000, request 487. 3 inspections required.

– DRAWING NOT TO SCALE –

STORMWATER MANAGEMENT TYPICAL DETAILS

– Presumptive and Performance Design Approach –

Basin – lined

Bureau of Environmental Services

NUMBER

SW-240

7-1-16

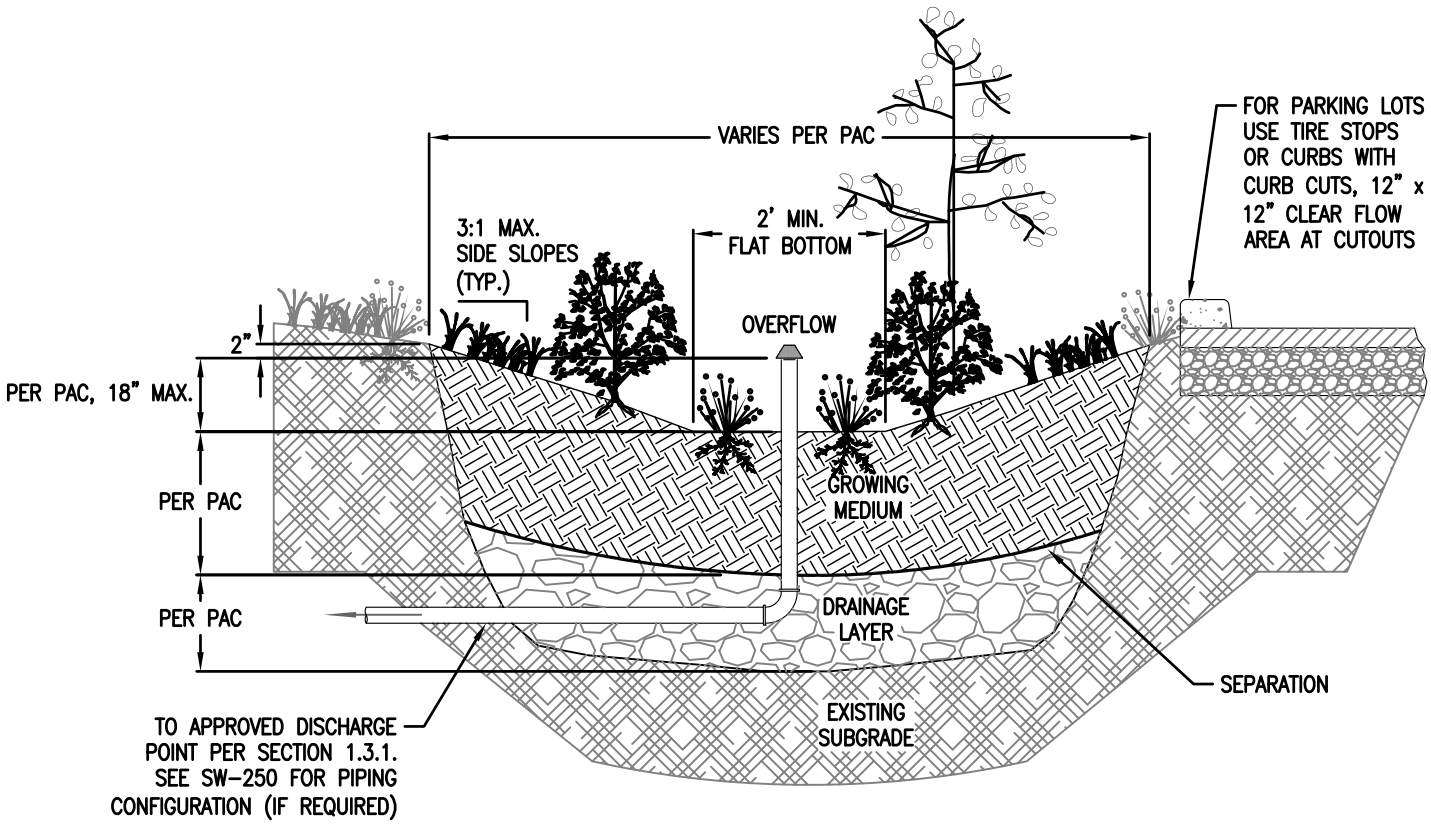

1. Detail intended as an example. Detail must match PAC assumptions and/or design report.

2. Provide protection from all vehicle traffic, equipment staging, and foot traffic in proposed infiltration areas prior to, during, and after construction.

3. Dimensions:
   Width of basin: 5' minimum
   Depth of basin(from top of growing medium to overflow elevation): Per PAC
   Flat bottom width: 2' minimum.
   Side slopes of swale: 3:1 maximum.

4. Setbacks:
   Basin must be 10' away from foundations and 5' away from property lines.

5. Overflow:
   Basins must connect to approved discharge point according to SWMM Section 1.3.
   Inlet elevation must allow for 2" of freeboard, minimum.
   Protect from debris and sediment with strainer or grate.

6. Piping must be ABS Sch.40, cast iron, or PVS Sch.40. 3" pipe required for facilities draining up to 1500 s.f., otherwise 4" min. pipe. Piping must have 1% grade and follow the Uniform Plumbing Code.

7. Drain Layer: If needed 3/4" – 1 ½" washed rock or as approved. Depth per PAC.

   Separation between drain rock and growing medium: if needed, pea gravel lens, 2 to 3 inches deep or as approved.

8. Growing Medium:
   Use sand/loam/compost 3-way mix, or approved mix that will support healthy plants. 18" minimum depth if there is a drainage layer. If soils are well draining and there is not a drainage layer depth may be reduced as approved.

9. Vegetation: Follow landscape plans otherwise refer to plant list in SWMM. Minimum container size is #1. # of plantings per 100sf of facility area:
   Zone A (wet): 80 herbaceous plants OR 72 herbaceous plants and 4 small shrubs.
   Zone B (moderate to dry): 7 large or small shrubs AND 70 groundcover plants.
   The delineation between Zone A and B shall be either at the outlet elevation or the check dam elevation, whichever is lowest.
   If project area is over 200sf consider adding a tree.

10. Splash Block: Install 4-6" washed river rock or splash pad for erosion control at inlets and downspout.

11. Inspections: Call BDS IVR Inspection Line, (503) 823-7000, request 487. 3 inspections required.

– DRAWING NOT TO SCALE –

STORMWATER MANAGEMENT TYPICAL DETAILS

– Presumptive and Performance Design Approach –

Basin – unlined

Bureau of Environmental Services

NUMBER

SW-241

7-1-16

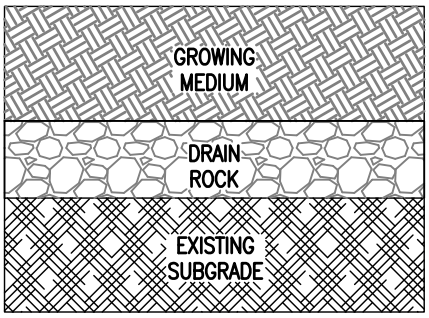

INFILTRATION

STORMWATER HIERARCHY CATEGORY 1
PAC CONFIGURATION A, B

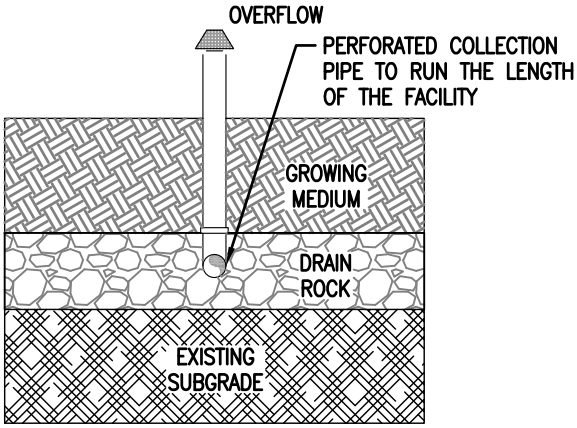

HYBRID

STORMWATER HIERARCHY CATEGORY 2
OVERFLOW DIRECTED TO DRAIN ROCK.
(SEE SW-151 AND SW-152 FOR MORE INFORMATION)
PAC CONFIGURATION E, F

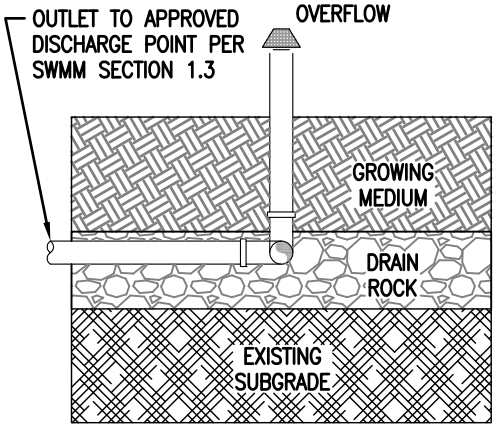

PARTIAL INFILTRATION

STORMWATER HIERARCHY CATEGORY 3 or 4
OVERFLOW AND UNDERDRAIN REQUIRED.
SET UNDERDRAIN WITHIN DRAIN ROCK.
PAC CONFIGURATION C

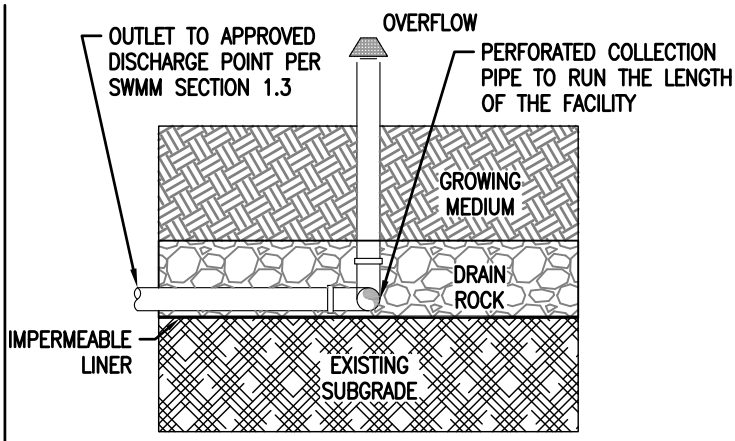

LINED

STORMWATER HIERARCHY CATEGORY 3 or 4
OVERFLOW AND UNDERDRAIN REQUIRED.
SET UNDERDRAIN AT BASE OF DRAIN ROCK LINER.
PAC CONFIGURATION D

NOTE: Hybrid facilities must be registered as a UIC designed under the presumptive approach.

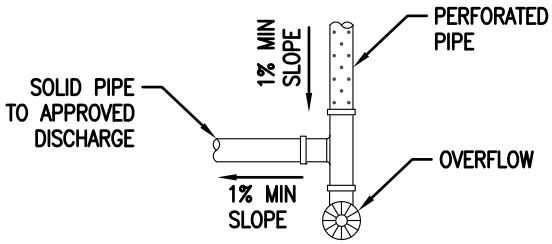

PLAN VIEW

PIPE W/ UNDERDRAIN & DISCHARGE POINT

- DRAWING NOT TO SCALE -

STORMWATER MANAGEMENT TYPICAL DETAILS

– Presumptive Design Approach –

Facility Overflow Configurations

Bureau of Environmental Services

NUMBER

SW–250

7–1–16

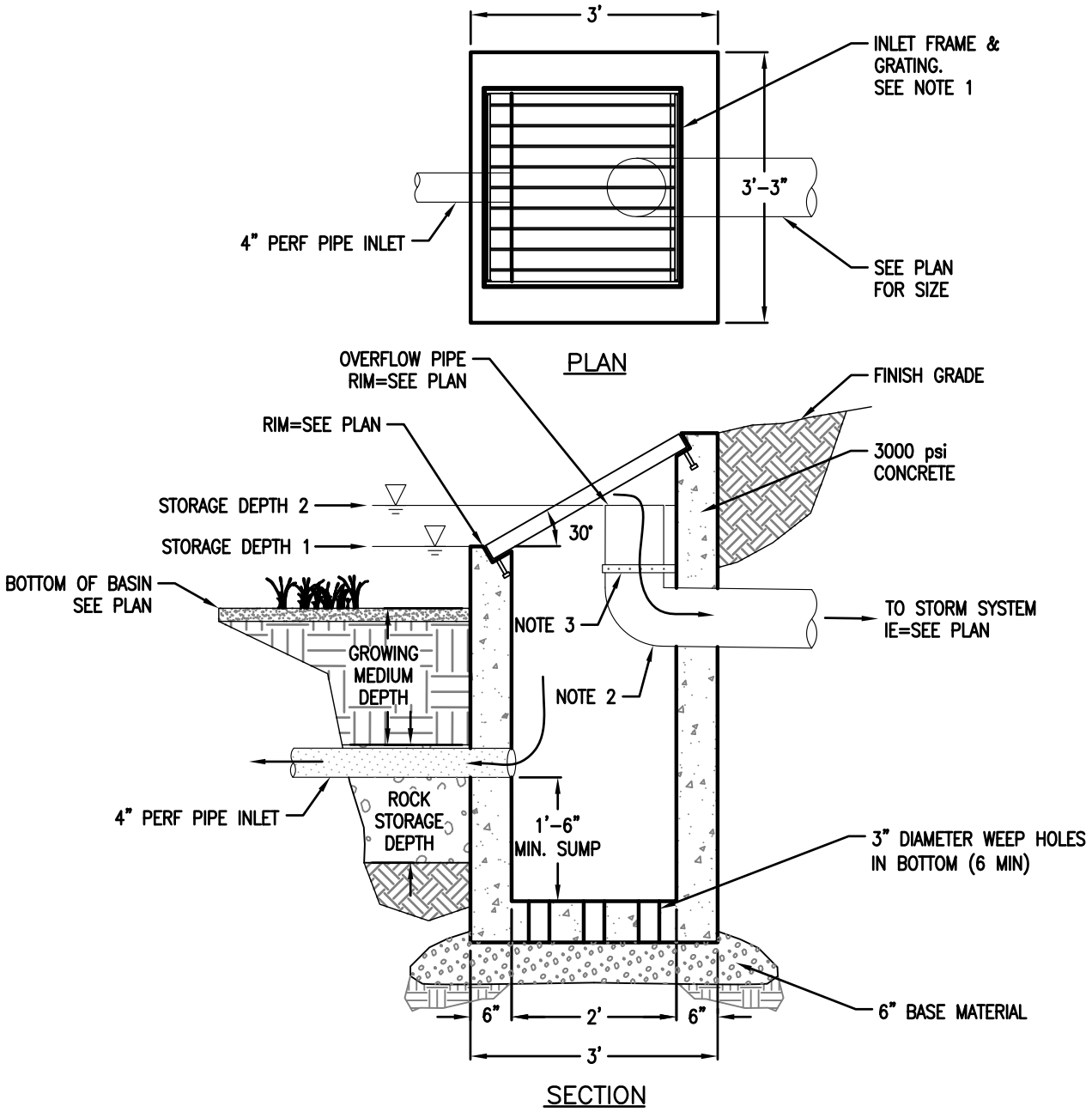

1. Grating and frame must be galvanized steel medium duty.
2. 8" dia. outlet pipe with upturned elbow.
3. Secure outlet pipe with s/s band embedded 2" in wall.

- DRAWING NOT TO SCALE -

STORMWATER MANAGEMENT TYPICAL DETAILS

– Presumptive Design Approach –

Facility Overflow Configuration E

Bureau of Environmental Services

NUMBER

SW–251

7–1–16

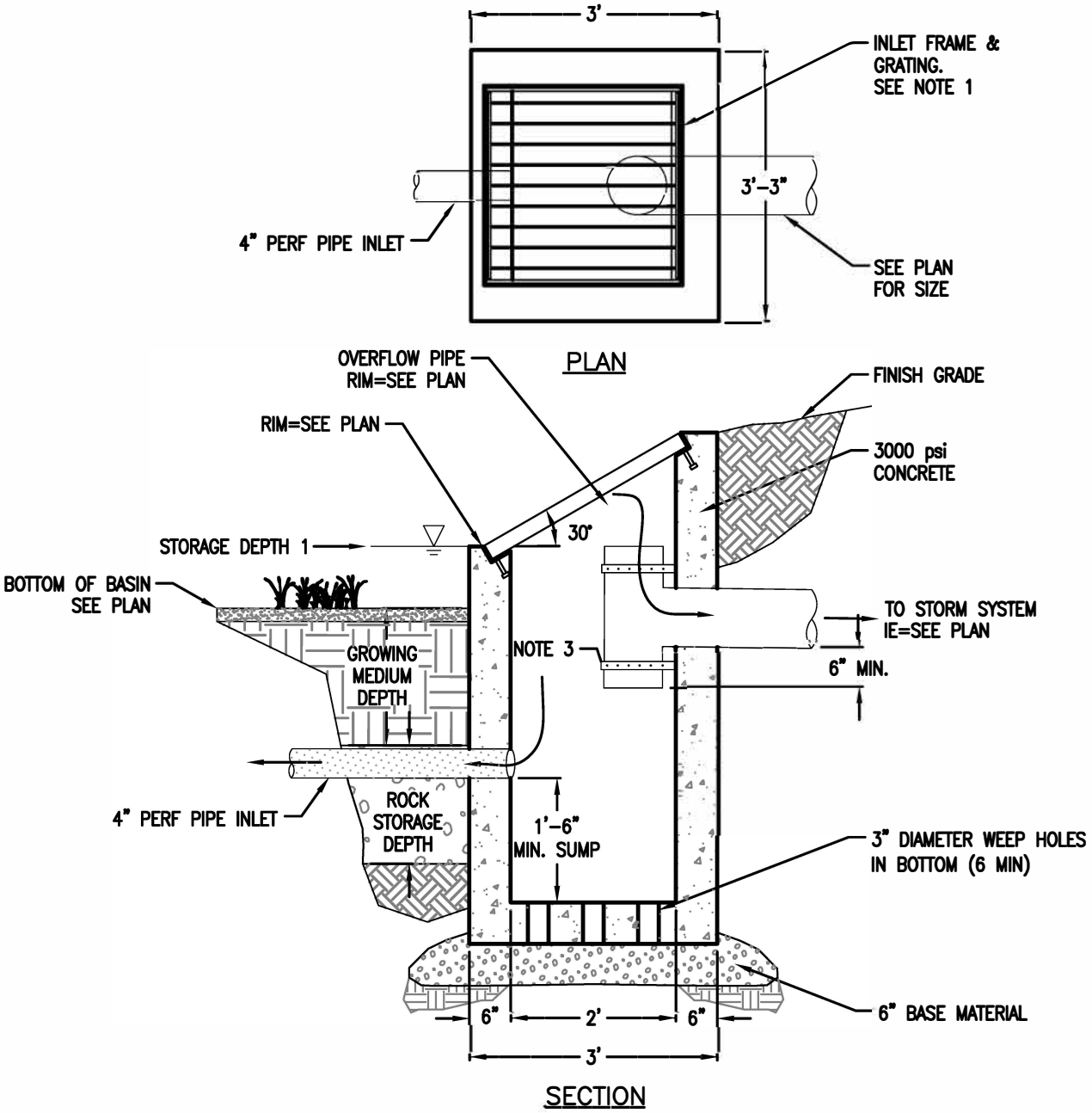

1. Grating and frame must be galvanized steel medium duty.
2. 8" dia. outlet pipe with upturned elbow.
3. Secure outlet pipe with s/s band embedded 2" in wall.

- DRAWING NOT TO SCALE -

STORMWATER MANAGEMENT TYPICAL DETAILS

– Presumptive Design Approach –

Facility Overflow Configuration F

Bureau of Environmental Services

NUMBER

SW-252

7-1-16

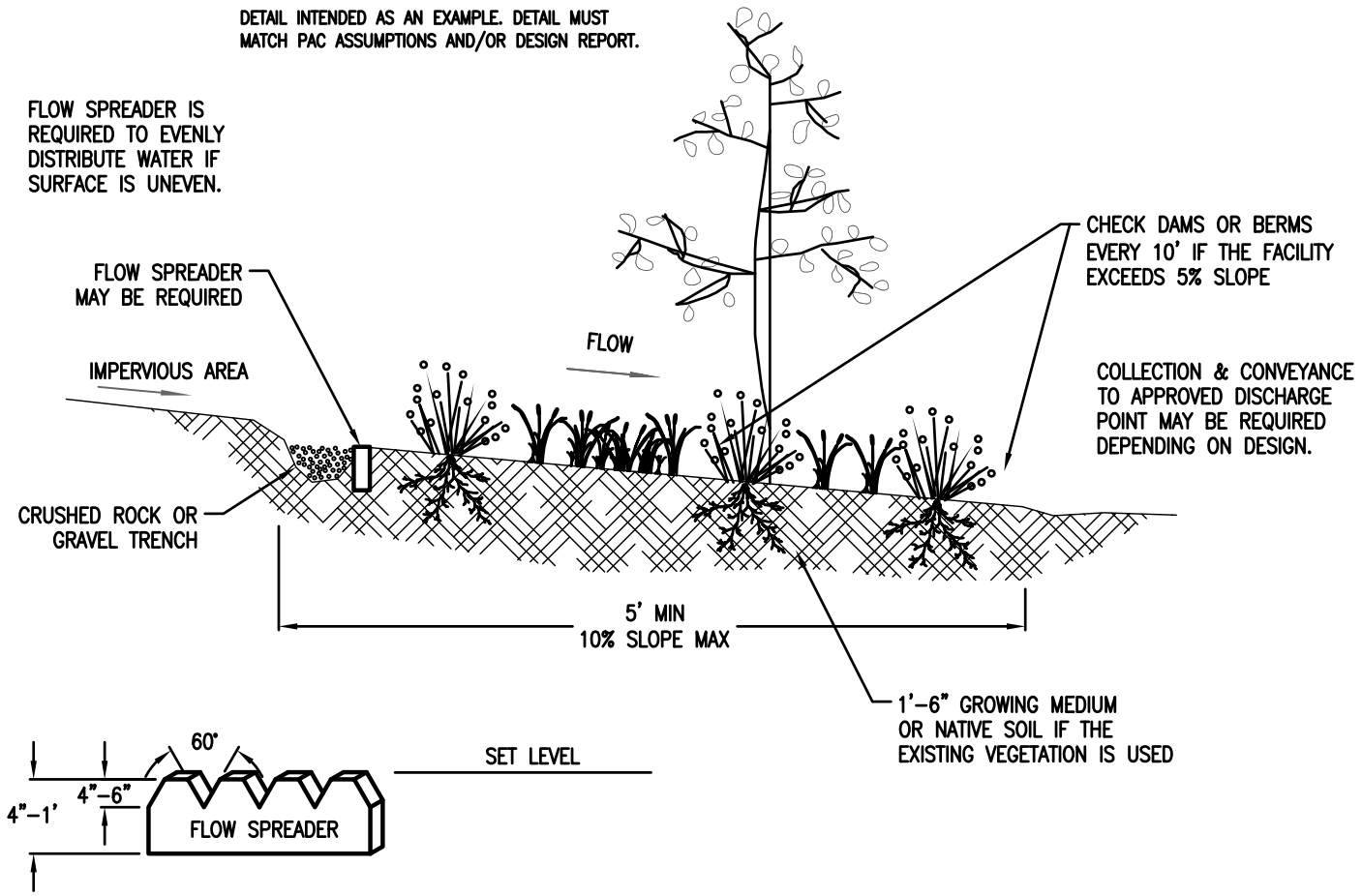

1. Detail intended as an example. Detail must match PAC assumptions and/or design report.

2. Provide protection from all vehicle traffic, equipment staging, as well as foot traffic for proposed infiltration areas prior to and during construction.

3. Dimensions:
   a. Flow line length: 5' minimum.
   b. Slopes: 0.5 – 10%

4. Setbacks (from beginning of facility):
   a. 5' from property line
   b. 10ft from buildings
   c. 50ft from wetlands, rivers, streams, and creeks where required.

5. Overflow: Collection from filter strip must be specified on plans to approved discharge point according to SWMM Section 1.3.

6. Growing Medium: Unless existing vegetated areas are used for the filter strip, growing medium must be used within the top 18" (Or approved mix. Use sand/loam/compost 3-way mix).

7. Vegetation: The entire filter strip must have 100% coverage by native grasses, native wildflower blends, native ground covers, or any combination thereof.

8. Flow Spreaders: A grade board or sand/gravel trench may be required to disperse the runoff evenly across the filter strip to prevent a point of discharge. The top of the level spreader must be horizontal and at an appropriate height to provide sheetflow directly to the soil without scour. Level spreaders must not hold a permanent volume of runoff. Grade boards can be made of any material that will withstand weather and solar degradation. Trenches used as level spreaders can be filled with washed crushed rock, pea gravel, or sand

9. Check Dams: must be placed according to facility design otherwise:
   a. Equal to the width of the filter
   b. 3 to 5" in height
   c. Every 10' where slope exceeds 5%.

9. Inspections: call BDS IVR Inspection Line, (503) 823-7000, for appropriate inspections.

– DRAWING NOT TO SCALE –

STORMWATER MANAGEMENT TYPICAL DETAILS

– Performance Design Approach –

Filter Strip

Bureau of Environmental Services

NUMBER

SW-260

7-1-16

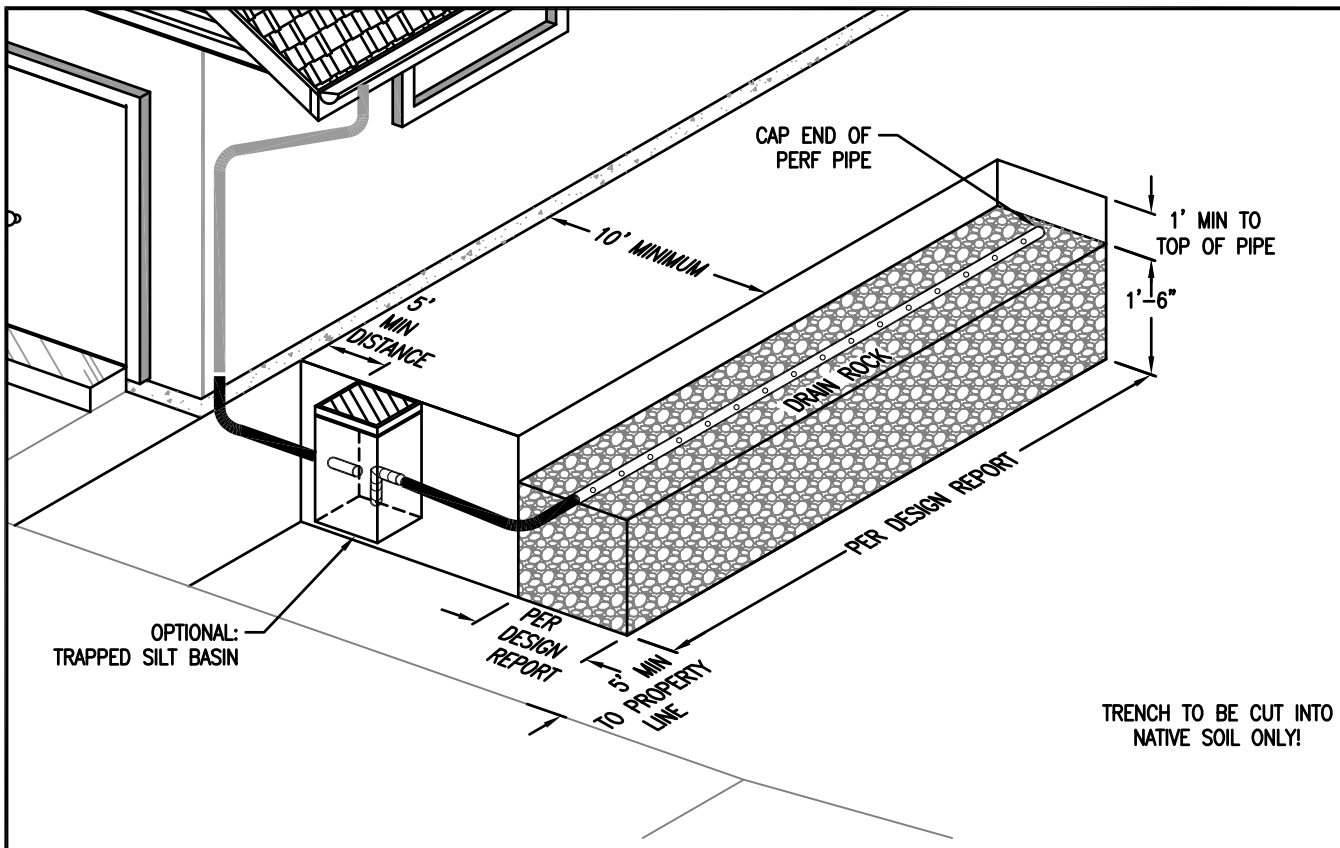

1. Detail intended as an example. Detail must match design report.
2. Provide protection from all vehicle traffic, equipment staging, and foot traffic in proposed infiltration areas prior to, during and after construction.
3. Siting Criteria: Soakage trench must not be placed where base of facility has less than 5' of separation to water table.
4. Sizing: Per design report.
5. Setbacks: Soakage trench measured from outside edge of facility, must be 10' from foundations, 5' from property lines, and 20' from cesspools.
6. Piping: must be ABS Sch.40, cast iron, or PVC Sch.40. 3" pipe required for up to 1,500 sq ft of impervious area, otherwise 4" min. Piping must have 1% grade and follow the Uniform Plumbing Code.
7. Trapped Silt Basin: Optional for roof runoff or pedestrian-only paved areas.

SOAKAGE TRENCH CONSTRUCTION-SECTION

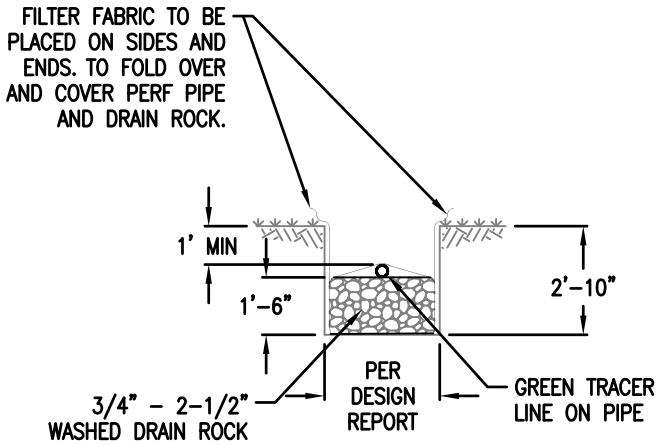

LINE TRENCH SIDES WITH FILTER FABRIC AS SHOWN, ADD 18" OF DRAIN ROCK. PLACE PERF. PIPE AND COVER ALL.

- DRAWING NOT TO SCALE -

STORMWATER MANAGEMENT TYPICAL DETAILS

- Performance Design Approach -

Soakage Trench

Bureau of Environmental Services

NUMBER

SW-270

7-1-16

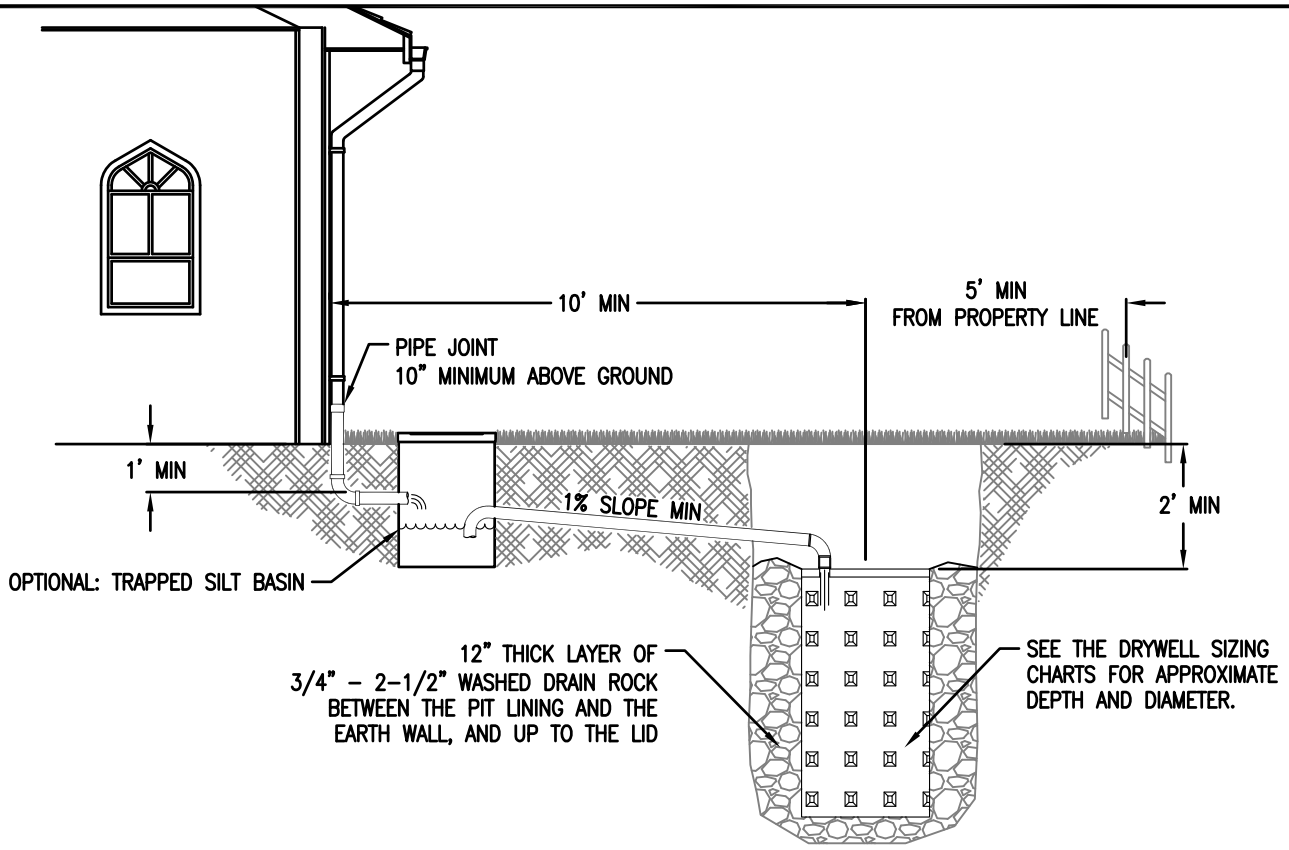

1. Detail intended as an example. Detail must match design report.
2. Provide protection from all vehicle traffic, equipment staging, and foot traffic in proposed infiltration areas prior to, during and after construction.
3. Siting Criteria: Gravelly sand, gravelly loamy sand or other equally porous material must occur in a continuous 5' deep stratum within 12' of the ground surface. Drywell must not be placed where base of facility has less than 5' of separation to water table.
4. Sizing: Exhibit 2–36 is used as guidance to size drywells. Sizing per stormwater report.
5. Top of drywell must be below lowest finished floor.
6. Setbacks: Measured from center of drywell, must be 10' from foundations, 5' from property lines, and 20' from cesspools. Drywells sized using the performance approach that use a significantly sized rock gallery must measure setbacks from the edge of the rock gallery or get approval from geotechnical and structural engineers to place drywell closer to the foundation.
7. Piping: must be ABS Sch.40, cast iron, or PVC Sch.40. 3" pipe required for up to 1,500 sq ft of impervious area, otherwise 4" min. Piping must have 1% grade and follow the Uniform Plumbing Code.
8. Trapped Silt Basin: Optional for roof runoff or pedestrian only paved areas.

Exhibit 2–36: Drywell Sizing Table

Once approval has been given by BES for onsite infiltration of stormwater, the following chart shall be used as a general guide for sizing. Sizing per stormwater report.

IMPERVIOUS	28" Diameter				48" Diameter			
Area	Drywell Depth				Drywell Depth			
(sq–ft)	5'	10'	15'	20'	5'	10'	15'	20'
1000								
2000								
3000								
4000								
5000								
6000								
7000								
8000								
9000								
10000								

– DRAWING NOT TO SCALE –

STORMWATER MANAGEMENT TYPICAL DETAILS

– Performance Design Approach –

Drywell

Bureau of Environmental Services

NUMBER

SW–280

7–1–16

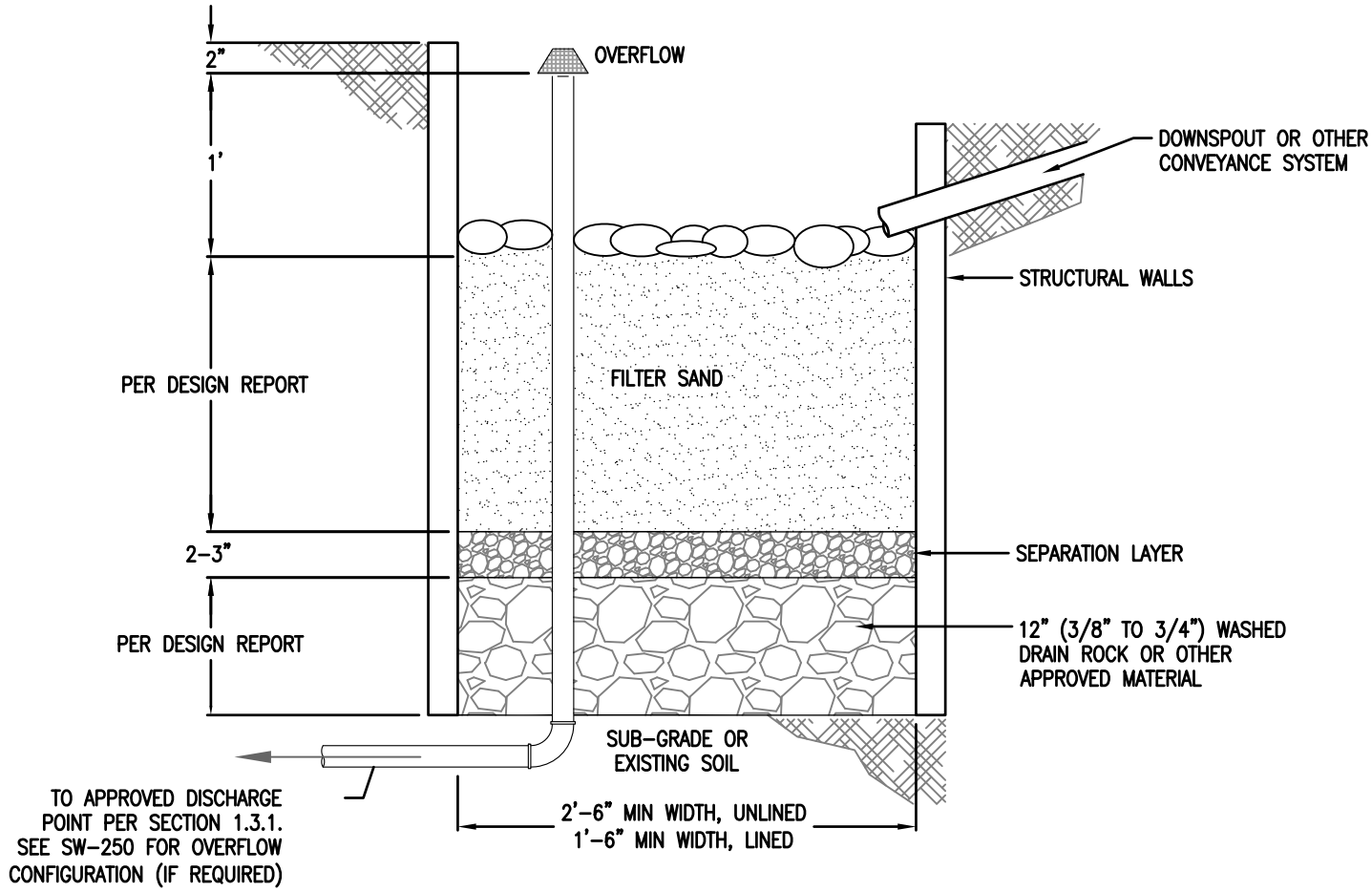

1. Provide protection from all vehicle traffic, equipment staging, and foot traffic in proposed infiltration areas prior to, during, and after construction.

2. Dimensions:
   a. Width of sand filter: 2'–6" minimum, unlined. 1'–6" minimum lined.
   b. Depth of sand filter (from top of sand to overflow elevation). Simplified: 12"; Presumptive: 6"– 18".
   c. Slope of sand filter: 0.5% or less.

3. Setbacks (from edge of facility):
   a. Infiltration sand filters must be 10' from foundations and 5' from property lines.
   b. Walls must be less than 30" in height above surrounding area if within 5 feet of property line.

4. Overflow (where required):
   a. Inlet elevation must allow for 2" of freeboard, minimum.
   b. Protect from debris, sand, and sediment with strainer or grate.

5. Piping: must be ABS Sch.40, cast iron, or PVC Sch.40. 3" pipe required for up to 1,500 sq ft of impervious area, otherwise 4" min. Piping must have 1% grade and follow the Uniform Plumbing Code.

6. Drain Rock (minimum):
   a. Infiltration sand filter: 12" of 1–1/2" – 3/4" washed.
   b. Flow–through sand filter: 8" of 3/4" washed.

7. Separation between drain rock and sand:
   Use a gravel lens (3/4 – 1/4 inch washed, crushed rock 2 to 3 inches deep) or approved equivalent.

8. Filter Sand:
   a. 18" minimum.
   b. See sand spec in SWMM chapter 2

9. Sand Filter Walls:
   a. Material must be concrete unless otherwise approved.
   b. Walls must be included on foundation plans.

10. Waterproofing: If walls are monolithically poured no additional liner/waterproofing is required. Check state structural requirements for foundations.

11. Install washed pea gravel or river rock to transition from inlet or splash pad to sand.

12. Inspections: Call BDS IVR Inspection Line, (503) 823–7000, for appropriate inspections.

– DRAWING NOT TO SCALE –

STORMWATER MANAGEMENT TYPICAL DETAILS

– Performance Design Approach –

Sand Filter

Bureau of Environmental Services

NUMBER

SW–290

7–1–16

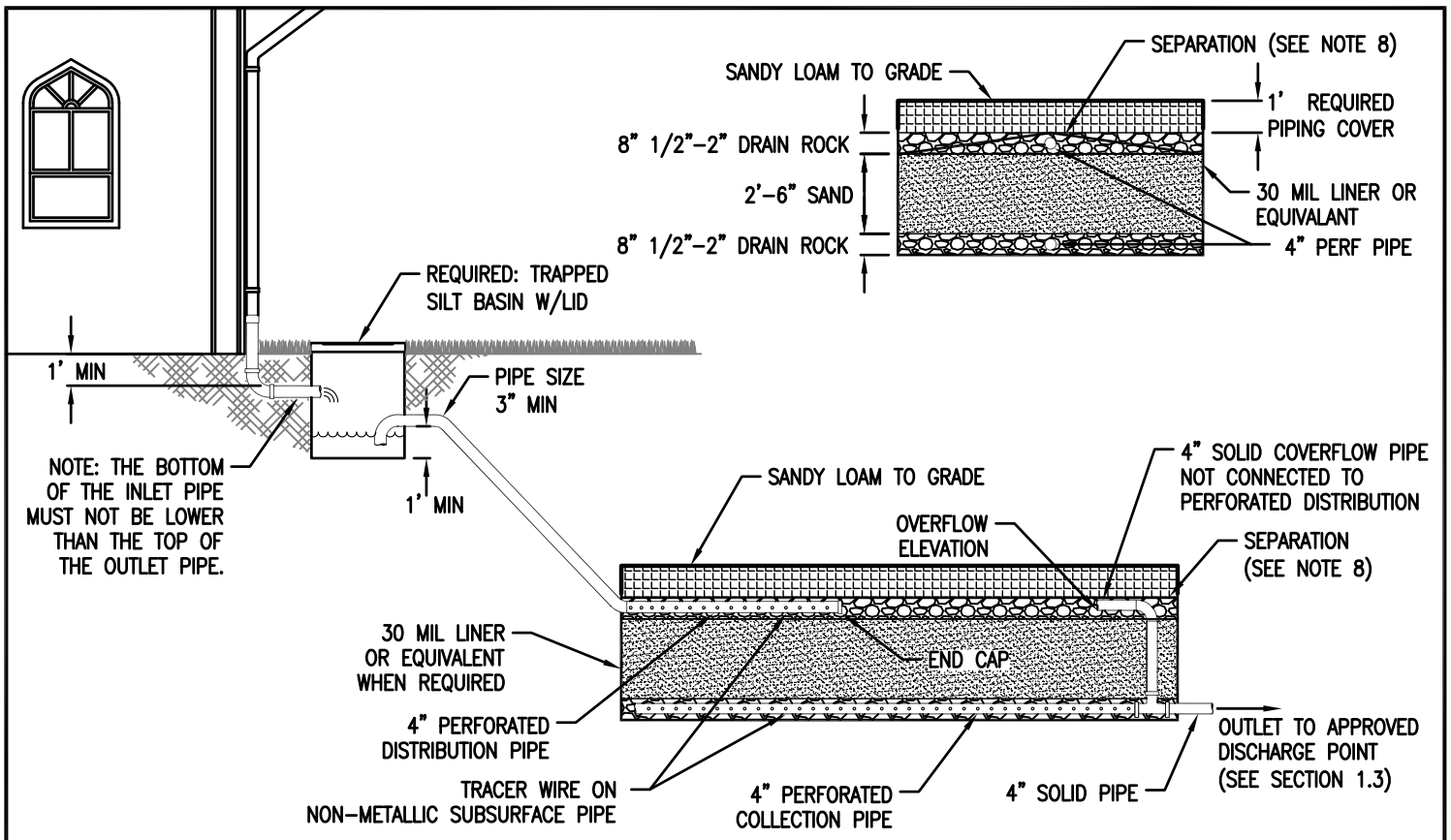

1. Provide protection from all vehicle traffic, equipment staging, and foot traffic in proposed infiltration areas prior to and during construction.

2. Dimensions:
   a. Height of subsurface sandfilter: 46" from base.
   b. Depth of excavation: 58" Min. (to accommodate 12"of cover).

3. Setbacks (from edge of facility):
   a. Infiltration facilities must be 10' from foundations and 5' from property lines.
   b. Lined facilities may be within 10' of foundation and within 5' of property line if properly lined.

4. Trapped silt basin required prior to inlet to subsurface sand filter.

5. Overflow: perforated collection pipe within top gravel layer connected to approved discharge point according to Section 1.3.

6. Piping must be ABS Sch40, cast iron, or PVC Sch40. 3" pipe must be used for up to 1500sf of impervious area, otherwise 4" minimum. Piping must have 1% grade and must follow current Uniform Plumbing Code.
   a. Underdrain piping system must consist of minimum 4" diameter collector manifold with perforated lateral branch lines.
   b. Underdrain laterals must be placed with minimum 1% positive gravity drainage to the collector manifold.
   c. The collector manifold must have a minimum 1% grade toward the discharge joint.
   d. Lateral spacing of collection or distribution pipes must not exceed 10'.
   e. All laterals and collector manifolds must have cleanouts installed, accessible from the surface without removing or disturbing filter media.
   f. Outlet to approved discharge point must be protected from soil, gravel, or sand displacement with filter fabric or equivalent.

7. Drain Rock and Sand Depth:
   a. 8" of 3/4" washed drain rock as base.
   b. 30" of washed sand per chapter 2.
   c. 8" top layer of 3/4" washed drain rock over sand.

8. Separation between drain rock and sand: Use filter fabric or a gravel lens (3/4 – 1/4 inch washed, crushed rock 2 to 3 inches deep) or approved equivalent.

9. Waterproof Liner: Must be 30 mil EPDM, HDPE or equivalent for facilities when lining is required.

10. Inspections: Call BDS IVR Inspection Line, (503) 823-7000, for appropriate inspections.

– DRAWING NOT TO SCALE –

STORMWATER MANAGEMENT TYPICAL DETAILS

– Performance Design Approach –

Subsurface Sand Filter

Bureau of Environmental Services

NUMBER

SW–291

7–1–16