Sewer and Drainage Facilities Design Manual

ENVIRONMENTAL SERVICES
CITY OF PORTLAND

working for clean rivers

SEWER AND DRAINAGE FACILITIES DESIGN MANUAL

City of Portland
Bureau of Environmental Services

Engineering Services

DRAFT WITH APPLIED ERRATAS
Errata #1 November 2008
Errata #2 July 2011

Contents

CHAPTER 1 – GENERAL INFORMATION 11

1.1 Introduction 11
1.2 City's Authority to Manage and Operate the Public Sewer System 12
1.3 The City Sewerage System 12
1.4 Urban Services Boundary 14
1.5 Relationship between this Manual and the Stormwater Management Manual (SWMM) 16
1.6 Organization 17
1.7 Applicability 17
1.8 The Need for Standards 18
1.9 Manual Revision and Variance from these Standards 18
1.10 Coordination with other City Bureaus 19
1.11 Useful Contacts within the City 19
1.12 Companion Documents and Internet Links 20
1.13 Glossary 24

CHAPTER 2 – PROJECT DELIVERY, PERMITTING, and GENERAL PROCEDURES 1

2.1 Introduction 1
2.2 Types of Projects 1
2.2.1 Local Improvement 2
2.2.2 Public Improvement 2
2.3 General Design Responsibilities 2
2.3.1 BES Staff 2
2.3.2 Consultant under Contract with the City 3
2.3.3 Consultant under Contract with a Permittee 3
2.4 Plan, Specification, Computation and other Requirements 4
2.4.1 Plan Requirements 4
2.4.2 Specification Requirements 5
2.4.3 Use of Standard Details and Drawings: 5
2.4.4 Computation and Other Supporting Document Requirements 8
2.4.5 Ownership of Documents 8
2.4.6 Consistency 8
2.4.7 BES Lacks Permitting Jurisdiction for other City Bureaus or Outside Agencies 9
2.5 Public Works Permits 9

2.5.1 Public Works Permit Application Requirements 9
2.5.2 Level 1 Sewer Connection Permits 9
2.5.3 Level 2 Simplified Permit in Public ROW/Easements (formerly Short Sewer 10
Extension Permit) 10
2.5.4 Level 3 Public Works Permit Process (no change to text – provided for context) 10
2.6 Design Manual Revision and Variance Request 13
2.6.1 Manual Revisions - The Process for Suggesting Changes to the Manual 13
2.6.2 The Design Variance Process - Requesting a Change from these Standards 14
Chapter 2 – Noteworthy Items 20
CHAPTER 3 – GENERAL DESIGN REQUIREMENTS 1
3.1 Project Service Life 1
3.2 Service Requirements 2
3.2.1 Service to Existing and Future Development 2
3.2.2 Gravity Systems versus Pumped Systems 2
3.2.3 Sewer Separation 2
3.2.4 Sanitary Sewers 3
3.2.5 Storm Drainage Facilities 3
3.2.6 Combined Sewers 4
3.3 Drainage for Seeps, Springs and Artesian Conditions 4
3.4 Standard Sewer Locations 5
3.4.1 Within a Right of Way 5
3.4.2 Within an Easement 6
3.5 Obtaining Easements - Preparation, Form and Recording 8
3.6 Drainage Reserve (City Code Chapter 17.38 and Zoning Code Title 33 Planning and Zoning) 9
3.7 Survey Requirements 9
3.7.1 Survey Standard 10

3.7.2 City Of Portland Datum 10
3.7.3 Vertical Control 10
3.7.4 Horizontal Control 10
3.8 Geotechnical Investigations Requirements 11
3.8.1 Utility Investigation Requirements 12
3.8.2 Underground Utility Location 12
3.8.3 Addressing and Resolving Utility Relocation Conflicts 13
3.9 ODEQ Review Of City Projects 13
3.10 Flow Conversion Factors 13
Chapter 3 – Noteworthy Items 15
CHAPTER 4 - GENERAL PIPELINE DESIGN CRITERIA AND PROCEDURES 1
4.1 Introduction 1
4.2 Pipe Materials 1
4.2.1 Pipeline Materials 2
4.2.2 Joints 2
4.2.3 Fusion Welding 4
4.2.4 Selection of Pipe Class and Wall Thickness 4
4.3 General Horizontal Alignment 4
4.3.1 No Curved Sewers Requiring Pulled Joints and the Use of Blind Bends{ XE 5
"Blind Bends" } 5
4.4 General Vertical Alignment 6
4.4.1 Minimum Depth Determination 7
4.4.2 Minimum Vertical Separation 7
4.4.3 Crossing between Sanitary Sewers and Water Lines 8
4.4.4 Vertical Alignment - Profile Requirement 9

4.4.5 Determining Sewer Slope between Manholes/Structures 10

4.5 Pipeline Strength Design 11
4.5.1 Dead (Soil) Loads 11

4.5.2 Live Loads 11

4.5.3 Types of Pipes and Their Design Strength Standards 12

4.5.4 Rigid Pipe Design 12

The minimum cover over the top of the pipe is 3.0 feet. A special load analysis is required for pipes with less than 3.0 feet of cover 15

4.5.5 Flexible Pipe Design 15

4.6 Manhole Location and Design 20
4.6.1 Types of Manholes 21

4.6.2 Horizontal and Vertical Manhole Locations 23

4.6.3 Maximum and Minimum Spacing between Manholes 23

4.6.4 Manhole Design 24

4.6.5 Pipe to Manhole Geometry 24

4.6.6 Inside Manhole Drop Connection 27

4.6.7 Pipe Stubouts from Manholes 27

4.6.8 Manhole Channel Design 27

4.6.9 Manhole Depth Design 29

4.6.10 Diameter of Frames and Covers 30

4.6.11 Setting Elevation of Manhole Frame and Cover 30

4.6.12 Alternate Manhole Features 31

4.7 Cleanouts - When and Where They Can be Used 31
4.7.1 Lateral Cleanout 31

4.7.2 Terminal Cleanout 32
4.8 Abandonment of Sewers, Manholes, Sumps and Structures 32
4.8.1 Sewers 12-Inches And Less in Diameter 33
4.8.2 Sewers Greater Than 12-Inch In Diameter 33
4.8.3 Manholes and Sumps 33
4.9 Buoyancy of Sewers 33
4.10 Constructing Sewers on Steep Slopes 40
4.10.1 Concrete Anchors for Pipe 12-inches Diameter and Smaller and Shallow Burial 40
(less than 4'deep) 40
4.10.2 Concrete Anchors for Pipe Greater Than 12-inch Diameter and Shallow Burial 40
(less than 4'deep) 40
4.11 Corrosion and Odor Control Design Considerations 40
4.11.1 Design Approach 41
4.12 Sewer System Repairs 41
Chapter 4 – Noteworthy Items 43
Chapter 5 – SANITARY SEWER DESIGN 1
5.1 Introduction 1
5.2 Criteria for Estimating Design Flows 1
5.2.1 Drainage Basin 2
5.2.2 Population 2
5.2.3 Land Use 3
5.2.4 Net Developable Area 4
5.2.5 Unit Wastewater Flow Rates Residential (Map Symbol R_) 4
5.2.6 Contingency Factor for Unanticipated Land Use Changes 5
5.3 Calculating Design Flows 6

5.3.1 Peak Factor 7
5.4 Design Criteria for Mainline Sewers 11
5.4.1 Capacity 12
5.4.2 Minimum Pipe Size 12
5.4.3 Manning Roughness Coefficient 12
5.4.4 Minimum and Maximum Velocity 12
5.4.5 Minimum Slope 12
5.5 Design Criteria for Sewer Service Laterals 12
5.5.1 Pipe Size and Material 13
5.5.2 Horizontal Alignment 13
5.5.3 Slope 14
5.5.4 Vertical Alignment 14
5.5.5 Calculating Service Lateral and Mainline Inverts 15
5.5.6 City Maintenance Limits of Responsibility 17
5.5.7 Connection to the Public Sewer System 19
5.5.8 USE OF WYE OR WYE-HEAD FITTINGS 20
5.6 Deep Connection Riser (DCR) 20
Chapter 5 – Noteworthy Items 24
CHAPTER 6 – HYDROLOGIC ANALYSIS FOR DRAINAGE 1
FACILITY DESIGN 1
Summary of Chapter 6 1
6.1 Introduction 1
6.2 Overview 2
6.3 Applicability 2
6.3.1 Variance from these Standards 2

6.3.2 Facility Sizing to Serve Future Development 3
6.4 Facility Classification 4
6.4.1 Return Period 4
6.5 Hydrologic Analysis – Converting Rainfall to Runoff 5
6.5.1 Select a Storm Return Period 5
6.5.2 Select a Method to Convert Precipitation into Runoff 5
6.5.3 Rational Method 8
6.5.4 Soil Conservation Service (SCS) Hydrograph Method 11
6.5.5 Santa Barbara Urban Hydrograph (SBUH) Method 15
6.6 Computer Models for Drainage System Design 17
6.6.1 HEC HMS formerly HEC-1 17
6.6.2 EPA – SWMM 17
6.7 Precipitation Data and Antecedent Conditions 18
6.7.1 Total Rainfall Depth 19
6.7.2 Intensity-Duration-Frequency (IDF) Information 19
6.7.3 Hyetographs - Rainfall Intensity Distributions 21
6.7.4 Antecedent Conditions 22
6.8 Physical Characterization of Site 23
6.8.1 Area 23
6.8.2 Land Use and Surface Type 23
6.8.3 Soils 24
6.8.4 Hydrologic Length and Slope 27
6.8.5 Lakes, Wetlands or Storage Facilities 27
6.9 Time of Concentration 28

6.9.1 Flow Regimes 28
6.9.2 Sheet Flow 29
6.9.3 Shallow Concentrated Flow 30
6.9.4 Open Channel Flow 33
6.10 Design Criteria 34
6.10.1 Capacity 34
6.10.2 Manning's Roughness Coefficient (n) 35
6.10.3 Minimum Conduit Sizes 35
6.10.4 Minimum and Maximum Velocity 35
6.10.5 Minimum Slope 36
6.10.6 Energy Losses 36
Chapter 6 – Noteworthy Items 37
CHAPTER 7– COMBINED SEWER DESIGN 1
7.1 Introduction 1
7.2 Combined Sewers in Portland 2
7.3 Applicability 2
7.4 Sizing Facilities to Serve Future Development 2
7.4.1 Sanitary Wastewater 2
7.4.2 Stormwater Runoff 3
7.5 Analysis Methods 3
7.5.1 Rational Method 3
7.5.2 PDX – SWMM 4
7.6 Design Criteria 4
7.6.1 Capacity 4
7.6.2 Manning's Roughness Coefficient (n) 5

7.6.3 Minimum Conduit Sizes 5
7.6.4 Minimum and Maximum Velocity 5
7.6.5 Minimum Slope 5
7.6.6 Energy Losses 5
7.7 Surcharged Combined Sewers 6
7.7.1 Background 6
7.7.2 Allowable Surcharge Criteria 6
7.7.3 Exceptions Requiring BES Approval 7
7.7.4 Serving and Protecting Future Development from Basement Flooding 7
Chapter 7 – Noteworthy Items 8
CHAPTER 8– HYDRAULIC DESIGN 1
8.1 Introduction 1
8.2 Flow Friction Formula 2
8.3 Methods of Application and Calculations 2
8.3.1 Critical Flow Calculations 4
8.3.2 Hydraulic Ratios of a Standard Sections 5
8.3.3 Hydraulic Grade Lines 5
8.4 Closed Conduits 6
8.4.1 Closed Conduits - Design Criteria 6
8.4.2 Manning's n_{ch} Values for Closed Conduits 7
8.5 Open Channels 7
8.5.1 Design Criteria 7
8.5.2 Channel Classification 8
8.5.3 Velocity Limitations 9
8.5.4 Manning's n_{ch} Values for Channels 9

8.5.5 Stable Channel Design 13
8.5.6 Vegetative Design 15
8.5.7 Design Procedures 16
8.5.8 Flexible Channel Lining (Riprap) Design 18
8.6 Outlet Structures 20
8.6.1 General 20
8.6.2 Outlet Structure Types 20
8.6.3 Orifices 21
Orifice Definitions Perforated Riser 22
8.6.4 Perforated Risers 22
8.6.5 Pipe and Culverts 23
8.6.7 Broad-crested Weirs 25
8.6.8 V-Notched Weir 26
8.6.9 Proportional Weirs 27
8.6.10 Combination Outlets 28
8.6.11 Clogging Potential for Small Diameter Orifices 28
8.7 Secondary Outlets 29
8.8 Trash Racks and Safety Grates 29
8.8.1 Trash Rack Design 30
8.9 Energy Dissipation 30
Chapter 8 – Noteworthy Items 32
10 Index 33

CHAPTER 1 – GENERAL INFORMATION

Summary of Chapter 1

This chapter provides a general overview of the Manual including information about its applicability, key City contacts, useful companion documents, a glossary of terms used throughout the Manual, and a reference list. The chapter is organized into the following sections:

Introduction
Relationship between this Manual and the Stormwater Management Manual
Manual Organization
Applicability
City's Authority to Manage and Operate the Public Sewer System
The City Sewerage System
The Need for Standards
References
    Companion Documents and Internet Links
Useful Contacts within the City
    Coordination with other City Bureaus
Design Manual Variance
Manual Revisions

1.1 Introduction

This Sewer and Drainage Facilities Design Manual ("Sewer Design Manual" or "Manual") provides information to assist City staff, Consultants, designers and others who are responsible for planning, designing, constructing, reviewing and approving sewer and drainage facilities within the City of Portland. This 2006 version of the Manual replaces the 1991 Sewer Design Manual.

The Manual provides information on City design standards and criteria. Using and following these standards can expedite a project's preparation, review and approval. These adopted standards help to ensure uniformity throughout the City's sewer and drainage system. Facilities designed in accordance with this Manual will meet the City's performance objectives and improve system operation and maintenance efficiency.

Compliance with these standards does not relieve a designer from the responsibility to apply conservative and sound professional judgment when designing City-owned facilities. All Manual users are responsible to review and verify the applicability of the methods and materials presented herein as they pertain to the specific project under design.

The standards set forth in this document are minimum standards and are intended to assist but not substitute for competent work by design professionals. Designers preparing a project and following these standards shall also take into account such matters as environmental impact, maintenance of pedestrian and vehicular traffic patterns, maintenance of existing and proposed utility services, constructability, system maintenance and sustainability principles. Only when

applying these standards and considering other such factors, can public facilities be designed that are both cost effective and that provide long-term economy of operation and maintenance.

1.2 City's Authority to Manage and Operate the Public Sewer System

The City of Portland, through the authority derived from the City Charter and Code Sections:

> "…may construct, reconstruct, enlarge, alter, modify, equip, operate and maintain, a sewage disposal or sewage purification system within…the corporate limits…" including all methods of collection, transport, treatment and disposal of sewage" (Charter of the City of Portland, Chapter 11 Special Services)."

The BES Chief Engineer has Code authority (Code Chapter 17.04.037 Responsible Engineer) to approve the design of all sewers constructed for ownership and maintenance by the City.

Title 3 of the City Code, Section 3.13.020, states: "The Bureau of Environmental Services is responsible for design, construction, operation and maintenance of the sanitary and stormwater collection and transport systems, and watershed management."

This Manual, "Sewer and Drainage Facilities Design Manual", has been adopted by the City Council as an administrative rule in accordance with City Code 17.32.50.

Figure 1.1 Graphics for Sewer Terminology

City of Portland - Bureau of Environmental Services

8.0 GRAPHICS FOR SEWER TERMINOLOGY

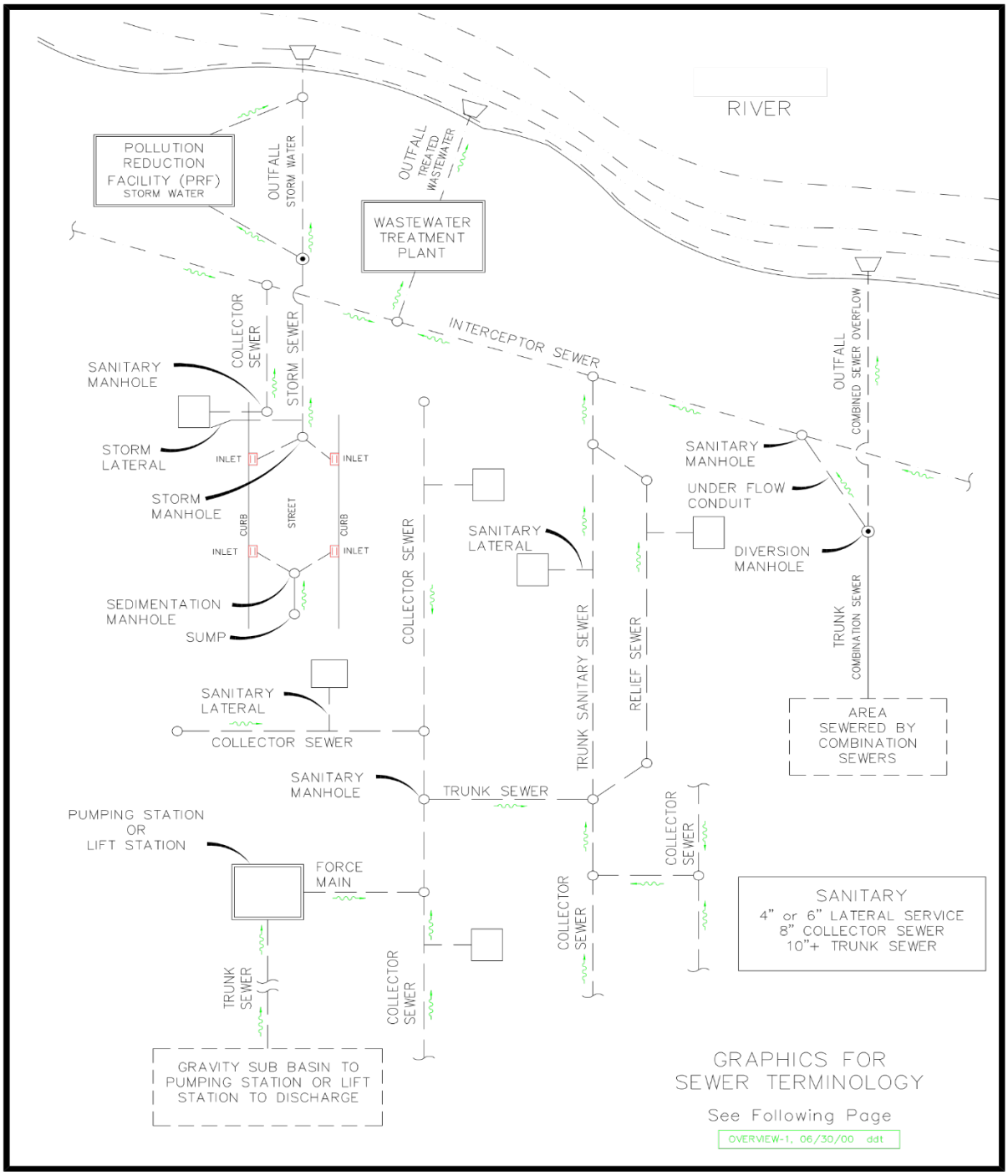

BES CADD Standards Manual
July 2000

Page 8-1

1.4 Urban Services Boundary

Figure 1.2 (next page) shows the City's Urban Services Boundary. Properties within this boundary are within the City's sewer service area, and may receive sewer service from the City of Portland. Connections to serve properties outside the City Boundary, but inside the City's USB are subject to the City's Urban Services policies and to review and approval by the BES Chief Engineer. The BES Chief Engineer has the authority to review and approve with conditions or deny any such request (City Code Title 17.32.021 Connection from Properties Outside the City).

See the City's Urban Services policies at:

http://www.portlandonline.com/auditor/index.cfm?&c=26904, specifically ENB-1.03 – Expedited Process for Minor Boundary Changes.

Map of Portland's Urban Services Boundary

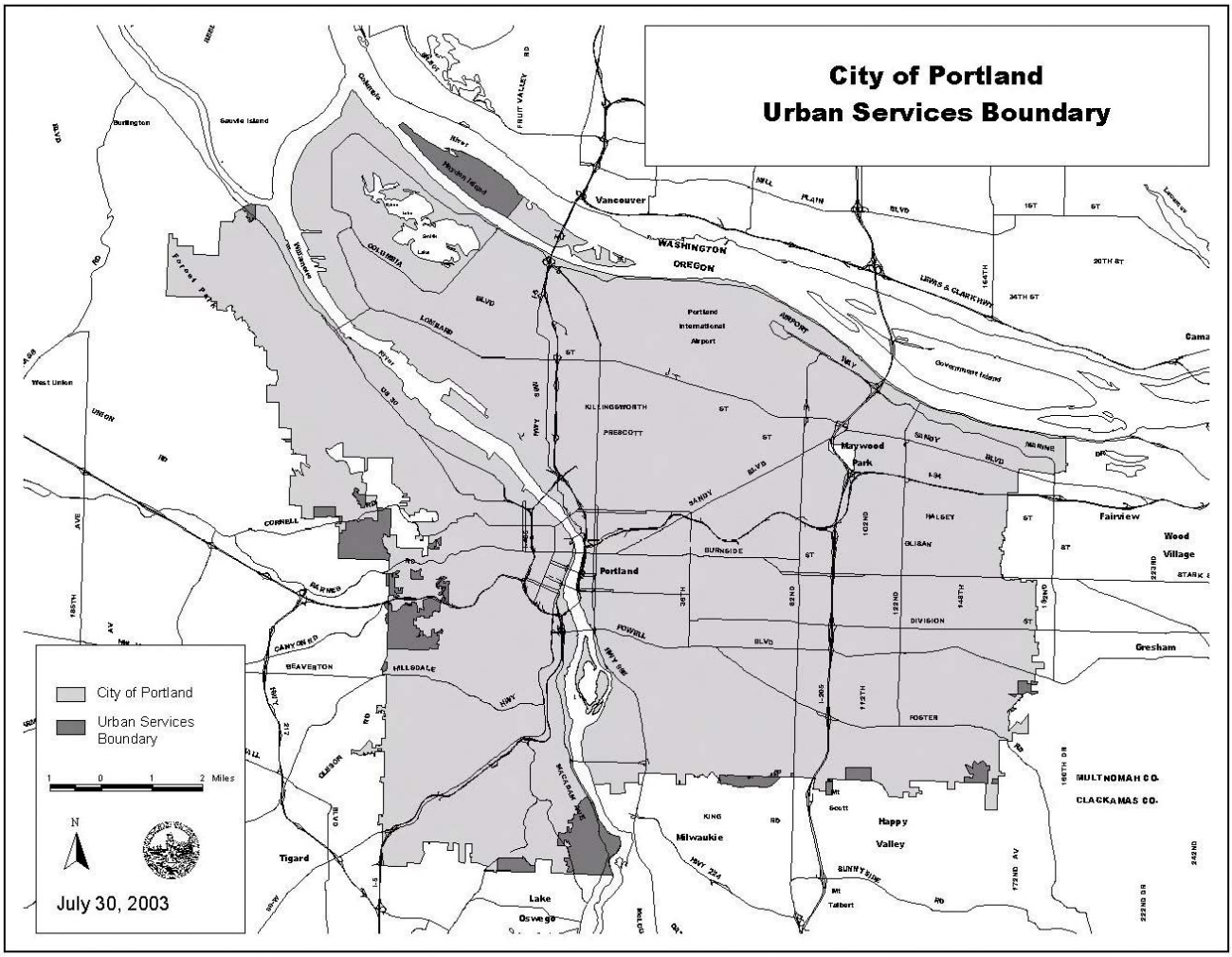

Figure 1.2 Urban Services Boundary

(From Bureau of Planning September 2003 – Planning Commission's Report and Recommendation – Creation of an Expedited Review Process for Uncontested Annexations and Service Extensions)

1.5 Relationship between this Manual and the Stormwater Management Manual (SWMM)

This Manual and the SWMM are complementary documents that only share features related to hydrology and hydraulic design of drainage facilities; each document addresses overlapping though different aspects of system design. Designers will need to reference each manual when working in the City to determine the appropriate standards that could influence a project.

This Manual is the primary reference for designing public sewers. Use it to design pipelines, drainage channels and other public facilities for conveying and disposing of sanitary sewage, stormwater and combined sewage flows.

The SWMM is the primary reference for managing private site stormwater and designing water quality facilities and storage structures for managing stormwater flow, and is an administrative rule adopted by City Council. It guides site development and redevelopment activities and focuses on simplified site design, alternate methods for managing stormwater, activity based pollution controls, and stormwater facility design. The SWMM should not be used to design any public sewer conveyance facility presented in this Manual.

Users of these manuals may find duplicate information shared between them; this information was unavoidable to resolve because of the overlap of subject matter shared between these documents. Before completing any design, a designer must contact the City to resolve any identified conflicts between these documents.

1.6 Organization

This Design Manual is divided into nine chapters; each of which addresses a particular technical topic related to sewer design. Each chapter is further divided to include related material about a specific aspect of the design process.

Chapter	Title and Description
1.	**GENERAL INFORMATION** – Offers an overview of the Manual organization, describes the need for standards, revision processes and includes reference materials
2.	**PROJECT DELIVERY, PERMITTING AND GENERAL PROCEDURES** - Identifies city project types, general design responsibilities, plan and specification requirements, Public Works Permit Application and Review processes and Manual Revision and Variance procedures.
3.	**GENERAL DESIGN REQUIREMENTS** - Outlines the current City design standards that designers should understand before beginning a project.
4.	**GENERAL PIPELINE DESIGN CRITERIA AND PROCEDURES** - Presents information relevant to all types of sewer and pipeline projects.
5.	**SANITARY SEWER DESIGN** - Presents specific criteria related to the design of separate sanitary sewers including planning criteria and methods to estimate wastewater flows.
6.	**HYDROLOGIC ANALYSIS FOR DRAINAGE FACILITY DESIGN** - Defines specific hydrologic analysis criteria for designing separated storm sewers and related facilities.
7.	**COMBINED SEWER DESIGN** - Presents criteria related to design of combined sewers including planning criteria, diversion manholes and storage facilities.
8.	**HYDRAULIC DESIGN** – Describes methodologies and criteria for analyzing water flow in pipes, open channels, manholes and outlet conveyance facilities and outfalls.
9.	**APPENDICES** - Contain select reference materials related to rigid and flexible pipe systems and including other reference materials related to the design of City sewer system. Provides technical data and design aids useful for completing sewer and drainage facility design.

1.7 Applicability

The Standards set forth in this Manual are the minimum criteria accepted by the City for planning, designing and constructing public sewer system facilities. These design procedures and standards apply to all public sanitary, stormwater/drainage and combined sewer facilities owned by the City. It also applies to all privately owned facilities located in public rights-of-way.

The Bureau of Development Services (BDS) reviews and approves all private facilities located on private property within the City to ensure compliance with State plumbing code. Private

facilities located on county or State-owned rights-of-way (ROW) within the City limits must receive approval from those jurisdictions in addition to meeting the City's requirements.

1.8 The Need for Standards

The City of Portland is responsible for the operation and maintenance of thousands of miles and numerous major and minor facilities within the sewer system. BES requires installation of "standard" facilities if they are owned and maintained by the City. Standard facilities are those the City has historically used or has selected because of their outstanding performance characteristics, reliability and availability and found them compatible with current design, operation and maintenance practices.

For a City the size of Portland, it is essential to have uniformity throughout the City's system to avoid maintenance of large and varied inventories of materials and to reduce the variety of maintenance equipment required. It is also important to use materials and methods that have proven to be reliable and that offer predictable performance throughout a facility's Project Service Life.

1.9 Manual Revision and Variance from these Standards

Revision Process

This Manual will be revised and updated periodically to reflect changes in City policy, the introduction of new materials and development of improved design techniques. As a Manual user, you can become a part of this revision process in one of two ways.

- Advise BES of any errors or corrections found in the Manual; and,
- Submit technical or content changes in effort to improve the Manual's quality and usefulness.

BES will issue updates to this Manual on a regular periodic basis. All Manual users shall insert these revisions into their Manual copy upon receipt.

Variance from these Standards

BES recognizes that although a Standard can address a majority of design requirements for the most commonly encountered situations, it cannot cover all circumstances. New construction methods, materials, and products are constantly being developed that can be effective at helping the City meet its obligations and responsibilities to its residents and ratepayers. The City also recognizes there are occasions when it may be desirable or necessary to vary from an established design Standard. When it is necessary to depart from any Standard the City will review such a variance with the expectation that such a request will meet the following criteria:

- The change will achieve the intended result through a comparable or even superior design than would have resulted from following the approved design standard
- The change will not adversely affect public or worker safety and health, and/or operation of the sewer system
- The change will not adversely affect maintainability and Life Cycle Cost.

- The change will demonstrate consistency with the City's goal to promote sustainability in all aspects of design decision-making and operations.

To meet this last criterion the City accepts responsibility to support the economy, protect natural resources, conserve natural habitat and minimize impacts on ecosystems.
Information on the City Sustainability Initiative as well as the list of the ten Sustainability Principles is available from the Office of Sustainable Development website. The website site address is: http://www.sustainableportland.org/. To find the principles open the following web page links: Sustainable Technologies and Practices/Sustainable Development Commission/sustainable city principles.

Departure from a Standard will rarely occur except for a unique circumstance. A description of the process for initiating either a Manual Revision or a Design Variance is in Chapter 2, Design Manual Revision and Variance Processes.

1.10 Coordination with other City Bureaus

Sewer projects can affect large areas of public or private property because of the depth and the size of these facilities. Other bureaus have authority to issue permits or impose conditions that can influence a project's execution. Issues that require inter-bureau coordination include street restoration, traffic management, utility relocation or protection of adjacent utilities, vegetation restoration and mitigation. Timely coordination with these bureaus will help to assure receipt of any necessary approvals and conditions before project award.

1.11 Useful Contacts within the City

The following is a list of City contacts that may be useful in providing information to designers preparing a project for review.

Bureau of Environmental Services, 1120 SW 5th Avenue, Room 1000, Portland, Oregon 97204-1972

General Information/ 503-823-7740
Development Services Hot Line/ 503-823-7761
Design Manual - Questions and Answers – call General Info number above.

Office of Transportation Engineering and Development, 1120 SW 5th Avenue, Room 800, Portland, Oregon 97204-1979

General Information / 503-823-7004
Survey / 503-823-7150
Right-of-Way Acquisition / 503-823-7166
Street Systems Management / 503-823-7608

Bureau of Development Services, 1900 SW 4th Avenue, Portland, Oregon 972015350

General Information / 503-823-7300
Plumbing Inspection Section / 503-823-7302
Site Development Section / 503-823-6892
Development Services Center / 503-823-7310

Bureau of Water Works, 1120 SW 5th Avenue, Room 600, Portland, Oregon 972041912
General Information / 503-823-7404
Development Review Services / 503-823-7400

1.12 Companion Documents and Internet Links

This Manual is not a stand-alone document. Other City service Bureau requirements and state regulations cover additional aspects of project design and permitting. Information about these other resources is available through the contacts and links listed below.

Use this Manual with the current version of these companion documents to obtain up-to date information on design practices and procedures. Reference these documents to derive the greatest benefit from the information in this Manual. These documents may contain necessary supplemental information when completing a project. Users are encouraged to visit the City web page http://www.portlandonline.com/ to identify current links and contact numbers to other City Bureaus. Many documents are available electronically and directly downloadable from the individual web sites. A partial list of relevant documents follows.

STANDARD CONSTRUCTION SPECIFICATIONS
City of Portland

This document contains the Standards Construction Specifications for all projects owned and/or maintained by the City of Portland. Direct purchase, $30 or by mail, $35 from:

Bureau of Development Services – Resource & Records
1900 SW 4th Avenue,
Portland, Oregon 97201-5350
503-823-7660

STANDARDS MANUAL - "Dig Safely"

Oregon Utility Coordinating Council

Copies available from:

Oregon Utilities Coordinating Council
6720 SW Macadam
Portland, Oregon 97219
503-232-1987 or 1-800-332-2344 or visit the OUCC web site: http://www.oucc.net/

CADD STANDARDS MANUAL
City of Portland, Bureau of Environmental Services

The manual is necessary when preparing sewer, wastewater treatment and pump station projects. It is of special interest to CADD professionals and drafters; this document contains AutoCAD layering information and a CD with useful menus to aid in preparing project plans. On-line manual available at:

http://www.portlandonline.com/bes/ Copies

are available from:

BES Engineering Services – Specifications, Standards and Materials Section
1120 SW 5th Avenue, Room 1000 Portland,
Oregon 97204-1972

MANUFACTURERS STANDARDS FOR PRECAST CONCRETE PRODUCTS (MSPCP)
City of Portland, Bureau of Environmental Services

This Manual is primarily for manufacturers of precast manholes, pipe and related facilities. It outlines BES's manufacturing and testing procedures and practices to construct precast facilities.

Copies are available from:

BES Engineering Services – Specifications, Standards and Materials Section
1120 SW 5th Avenue, Room 1000 Portland,
Oregon 97204-1972

Oregon Administrative Rules (OAR) 340, DIVISION 52 – REVIEW OF PLANS AND SPECIFICATIONS – Appendix A – Sewer Pipelines and Appendix B – Raw Sewage Lift Stations
Oregon Department of Environmental Quality (ODEQ) Copies

are available from:

ODEQ
522 SW Fifth Avenue
Portland, Oregon 97204 503-229-5696 or visit the ODEQ web site:
www.deq.state.or.us/regulations/rules.htm

Oregon Administrative Rules (OAR), CHAPTER 333, DIVISION 61, PUBLIC WATER SYSTEMS, 333-61-0050 (10), Crossings - Sanitary sewers and water lines
Department of Human Services, Health Division (HD)

Copies are available from

Oregon Health Division (OHD)
800 NE Oregon St., Suite 930
Portland, OR 97232
503-731-4000

Copies of these rules are available from the OHD website. A link to this address is as follows: http://arcweb.sos.state.or.us/rules/OARs_300/OAR_333/333_tofc.html.

EROSION CONTROL (EC) MANUAL
City of Portland

This manual provides information that will assist designers when developing a project specific EC plan.

Direct purchase, $5.50 from:

Bureau of Development Services – Resource & Records
1900 SW 4th Avenue,
Portland, Oregon 97201-5350 503-823-7660

or visit the BDS web site: http://www.portlandonline.com/bds/index.cfm?c=36670

STORMWATER MANAGEMENT MANUAL (SWMM)
City of Portland

This essential document defines the City's current stormwater management methods, procedures and practices within the City. Direct purchase, $35 or a free CD containing the SWMM from:

Bureau of Development Services – Resource & Records
1900 SW 4th Avenue,
Portland, Oregon 97201-5350 503-823-7660

or visit the BES web site: http://www.portlandonline.com/bes/.

WATER QUALITY FACILITIES – A DESIGN GUIDANCE HANDBOOK
City of Portland

This Handbook is a reference to the SWMM that elaborates on the standards found within this later document. It contains useful design information that is applicable to a variety of stormwater facilities. Copies available from:

BES Engineering Services – Specifications, Standards and Materials Section
1120 SW 5th Avenue, Room 1000 Portland,
Oregon 97204-1972

PUMP STATION DESIGN MANUAL
City of Portland

This condensed reference manual is for professionals experienced in the design of sewage pump stations. It summarizes and presents the design practices followed within the City of Portland.

Copies are available from:

BES Engineering Services – Specifications, Standards and Materials Section
1120 SW 5th Avenue, Room 1000 Portland,
Oregon 97204-1972

BES CAPITAL PROJECT IMPLEMENTATION PROCEDURES MANUAL
City of Portland

This manual is for BES staff and consultants who are responsible for completing a BES Capital Improvement Project (CIP). It summarizes and outlines the internal BES project delivery procedures that guide a project from its inception to project closeout.

Copies are available from:

BES Engineering Services
1120 SW 5th Avenue, Room 1000 Portland,
Oregon 97204-1972

ENGINEERING SERVICES QUALITY MANUAL (MANUAL NO. 2)
City of Portland

This manual defines BES's internal QA/QC procedures associated with project delivery. Copies are available from:

BES Engineering Services – Specifications, Standards and Materials Section
1120 SW 5th Avenue, Room 1000 Portland,
Oregon 97204-1972

CONTRACTING FOR PROFESSIONAL, TECHNICAL AND EXPERT SERVICES (PTE) MANUAL
City of Portland

This manual defines the City's processes and procedures to develop and manage PTE procurement opportunities while maintaining fair and open competition.

Copies are available from:

Bureau of Purchases
1120 SW 5th Avenue, Room 750
Portland, Oregon 97204-1972 503-823-6855

or visit the Purchasing web site: http://www.portlandonline.com/omf/index.cfm?c=26522

CITY OF PORTLAND WEB PAGE

This e-link provides a wealth of information about the City government, its services, programs and regulations that can affect sewer design. The site contains information about the City Charter and Code, links to City Bureaus, zoning code and other information that designers may find helpful.

http://www.portlandonline.com/

ODEQ UNDERGROUND INJECTION CONTROL (UIC) PROGRAM
Oregon Department of Environmental Quality

This e-link provides information about the ODEQ UIC program. Designers should reference this information if stormwater will be disposed of using underground injection methods.

http://www.deq.state.or.us/wq/uic/uic.htm

Additional Reference and Resources

Refer to the Appendices for additional design aids and reference materials that may be useful when completing City projects.

1.13 Glossary

All terms in this glossary relate to planning and designing sewer and drainage facilities. Several of these same or similar terms are defined differently or used in a different context in other City documents.

Each term in this glossary has been reviewed and in some cases revised to avoid an obvious conflict between the current definition and those same terms when found in other documents; unfortunately, potential conflicts may still exist. When planning or designing a sewer facility, first refer to these definitions. If a conflict between the definitions in this Manual and another document is identified, ask BES staff to clarify the issue before proceeding.

Acre – A unit of area measure. One (1) acre equals 43,560 square feet.

Anadromous Fish – A fish that ascends rivers from the sea or ocean for breeding purposes.

Average Rainfall Intensity, (I) – The average rate of rainfall upon a drainage basin, usually expressed in inches per hour.

Artesian – describes water rising to the surface under hydrostatic pressure.

BDS – Bureau of Development Services, City of Portland

BES – Bureau of Environmental Services, City of Portland

Backfill – the material placed in an excavation during the process of backfilling.

Backwater – The water upstream from an obstruction that is deeper than it would normally be without the obstruction.

Baffle – A structure built to absorb energy, to trap floating debris or to deflect, check, disturb, or regulate flow. Also can be a device used in a culvert to facilitate fish passage.

Base Flood – 100 year flood frequency. This is a flood having a 1 percent chance of being equaled or exceeded in any given year.

Bollard - A post used to prevent vehicular access. A bollard may or may not be removable.

Buffer – the area adjacent to a steep slope or landslide prone area that protects slope stability, and reduces landslide hazards to minimize risk or an area adjacent or part of a stream or wetland that provides slope stability, flow attenuation and erosion control.

Building Drain – Within a building the lowest elevation of horizontal piping that conducts sanitary sewage or stormwater to a building sewer.

Building Sewer - means the part of the horizontal piping of a drainage system that extends from the end of the building drain and that receives the discharge of the building drain and conveys it to a public sewer, private sewer, private sewage disposal system, or other point of disposal.

Bulkhead – A plug installed in a sewer to prevent flow into or out of the sewer system.

Capacity – the maximum flow rate or volume a sewer facility (e.g. pipe, channel, storage facility, inlet, culvert, flow control device, etc.) is designed to safely convey, receive, or

contain to meet a specific performance standard depending on the facility location within the sewer system.

Catch basin – a structural facility located just below the ground surface, used to collect stormwater runoff for conveyance purposes.

Channel – a long, narrow excavation that conveys water and is open to the air or a bed of a stream or river or a conduit.

Check Dam – A low structure or weir placed across an open channel to control water depth or velocity, or to control channel erosion.

Cleanout - a pipe constructed vertically from a sanitary lateral or a terminus sewer using a wye fitting and extending to the ground surface to provide a point of entry for sewer cleaning or inspection equipment.

Collector Sewer - A sewer designed to collect flow from two or more sanitary sewer laterals.

Combined or Combination Sewer – A sewer system designed to transport a combination of sanitary sewage mixed with stormwater.

Combined Sewage – Wastewater containing both sanitary sewage and stormwater flows.

Common Private Sewer System (also called Party Sewer) - means the portion of a building sewer that:

1. Is not owned by the City of Portland
2. Is used for draining more than one building under different ownership; and
3. Conveys the discharge to a sewer service lateral, public sewer, private sewage disposal system, or other point of disposal**.**

Connection - means the permitted joining of sanitary waste and drainage disposal pipes from property development to a public sewer system and the subsequent disconnection and/or removal of all other waste disposal systems such as cesspools or septic systems.

Conveyance – the transport of sanitary sewage, stormwater or combined sewage from one point or place to another.

Consulting Engineer or Consultant – A non-City employee or design professional registered by the State of Oregon who gives expert or professional advice or service.

Critical Depth – A flow depth, occurring under open channel conditions, that produces the greatest discharge while minimizing the specific energy of the flow.

Critical Flow – The maximum flow quantity carried in an open channel that coincides with a critical depth and velocity.

Cross-Street Flow – Any water flowing across the traffic lanes of a street.

Crown –The inside top of a pipe measured directly above the invert.

Curb -- a raised margin formed along the edge of a street or other paved area forming part of a gutter to convey surface water to an inlet or an approved point of disposal.

Culvert – A hydraulically short conduit, open on both ends, generally used to convey stormwater runoff through a roadway or an embankment and typically constructed without

manholes, inlets or catch basins. Water flowing in a culvert generally occurs as open channel flow.

Dam – A barrier constructed across a watercourse for the purposes of either diverting water into a conduit or channel or creating a reservoir.

Design Engineer – A licensed, professional engineer with responsibility to design and prepare project plans and specifications.

Design Flood – An estimated flood based on a calculated probability that a flood of equal or greater magnitude with a given frequency will occur (e.g. a design flood with a 1 percent chance of occurrence implies that on the average it will be exceeded 1 times in a 100-year interval).

Design Discharge Frequency – The return interval or recurrence interval used as a basis for establishing the design discharge.

Discharge – water leaving a project site through overland flow, built conveyance systems or infiltration facilities or the rate of the flow expressed in cubic feet per second (cfs).

Discharge Point – An approved point or location where water discharges without creating a significant adverse impact.

Diversion Manhole – a sewer manhole or structure constructed with a regulating device to divert combined sewage to another pipe, a point of disposal, or to a storage facility. Also includes a structure used to divert separated stormwater to a Pollution Reduction Facility.

Drainage Basin or Drainage Area – a defined area that contributes sanitary, stormwater or combined sewage flows to a point-of-interest or a sewer facility. The topography, natural or man-made barriers, political or economic factors define the area's boundaries.

Drainage or Stormwater Management Facility – A natural or engineered feature designed to collect, convey, store or removes pollutants from stormwater runoff.

Drop Connection or Drop Manhole – A vertical connection constructed as part of or added to a manhole to provide a controlled means of passing flow from a shallow sewer to a deeper sewer.

Drywell – A structural subsurface facility (e.g. cylinder or vault) with perforated sides or bottom used to dispose/infiltrate stormwater into the ground. The Oregon Department of Environmental Quality (ODEQ) regulates construction and operation of drywells following the Underground Injection Control (UIC) rules. Refer the ODEQ web page address found in Chapter1, Companion Documents and Internet Links.

Energy Dissipation – any method used to slow or reduce the total energy of flowing water.

Energy Grade Line – a calculated characteristic determined by adding the potential head and velocity head to describe the total energy of flow at any point in a sewer.

Existing Offsite Conditions – The conditions of the offsite drainage patterns, vegetation, and impervious cover at the time of analysis, including any problems recorded or observed in the study area at the time of analysis.

Floodplain – the total land area inundated by the base flood. The area includes the flood fringe and floodway. The City and County define these areas within the flood hazard regulation. Refer to City Code Chapter 24.50 Flood Hazard Areas.

Floodway – The channel of the river or stream and those portions of the floodplain that convey the 100-year base flood flow. City and County flood hazard regulations define these areas. Refer to City Code Chapter 24.50 Flood Hazard Areas.

Force Main – A pipe used to transport sewage from a lift station or pumping station through means of internal system pressure.

Freeboard – The vertical distance between the design water surface elevation and the elevation at which overtopping of a structure or facility that contains the water would occur.

Gabion – An external wire structure filled with earth or stones typically used to stabilize slopes or to dissipate flow energy.

Grade – 1) the elevation assigned to the pipe invert; 2) the slope of the pipe between manholes or structures. Calculate the slope by dividing the change in vertical elevation by the horizontal change in length.

Groundwater --underground water usually found in aquifers. Groundwater originates from infiltration.

Gutter – that portion of a roadway section, adjacent to the curb face, used to collect and convey stormwater runoff.

Pipe Haunch – an area of pipe embedment located under the pipe beginning at the pipe bottom up to the spring line.

Headwall – a structural appurtenance usually applied to the ends a culvert, or outfall, to support an adjacent embankment and protect the pipe end from damage.

Headwater (HW) – The depth of water impounded upstream of a culvert caused by a constriction, friction, or the configuration of the culvert entrance.

Hydraulic Gradient or HGL – the calculated slope between the potential head difference measured at different points along a pipe or conduit.

Hydrograph – a graph showing the flow rate past a specific point over time.

Impervious Area – any area determined to have a runoff coefficient greater than 0.8. A surface modified in a way that prevents water infiltration. Gravel surfaces are considered pervious unless they cover impervious surfaces or are compacted to a degree that causes their runoff coefficient to exceed 0.8.

Infiltration – 1) Water soaking into the ground. 2) Groundwater entering sewers through cracks or faulty joints.

Infiltration Facility - a structural facility that uses the percolation property of soil to absorb stormwater runoff and infiltrate it into the ground.

Inlet (Catch basin) – a structure located just below the ground surface used to collect stormwater runoff.

Intercepting Sewer – typically a large diameter sewer receiving flow from several collector and trunk sewers including a limited quantity of flow from combination sewers through diversion structures. All collected sewage is transported to a treatment plant or point-of-disposal.

Invert – The inside bottom of a pipe or conduit measured directly below the crown.

Manhole -- a structure that provides access to underground utilities for maintenance and inspection purposes

Nonconforming Sewer - means a private sanitary sewer that is:

1. Located on public or private property that is not on the same property as the structure or structures being served by the sewer; and
2. Not located within a recorded sewer easement or subject to a recorded covenant for easement regarding use of the sewer meeting the standards specified in administrative rules.

Orifice – An opening in a plate, wall or partition through which water may flow for the purposes of flow control or measurement.

Outfall – a location where collected and concentrated water is discharged. An outfall can occur at the end-of-a-pipe system, from a structural facility or from an open drainage channel.

Permeability – is the property of soil or another porous material to infiltrate water.

Pervious Area– any surface determined to have runoff coefficient less than 0.8. A surface modified in a way to encourage infiltration of water. **Point of Interest** – any location where flow information is desired.

Pollution Reduction Facility (PRF) -- a facility designed and constructed to treat stormwater runoff by removing pollutants. These facilities can include natural, passive systems involving vegetation and landscaping or manufactured devices that employ physical and mechanical treatment methods (Refer to the SWMM for additional information).

Private Sanitary Lateral - privately owned sewer. Begins from the building drain and terminates at the public collector sewer or the public lateral sewer

Private Sewer Service Lateral -means a sewer pipe that:

1. Has been designated as “private” by the Chief Engineer, BES, or has not been accepted as a public improvement by the Chief Engineer; BES, and

2. Serves as a conveyance system for individual or common private sewer systems. Project Manager (PM) – a person assigned the responsibility of coordinating and overseeing a Capital Improvement project from start-up to its completion. A PM may be City staff from Engineering Services, Development Engineering or other BES work group or a Consultant.

Project Service Life – The period a sewer or facility will remain in service after which time it could be a candidate for replacement due to obsolescence or deterioration.

Public Right of Way - means the area within the confines of a dedicated public street, an easement owned by the City, or other area dedicated for public use for streets or public utility facilities.

Public Sewer - means all pipes, manholes, and other appurtenances:

1. Constructed by the City's Bureau of Environmental Services, or

2. Permitted under a public works permit and accepted by the City's Bureau of Environmental Services, and designed for the collection and transport of stormwater, wastewater and sewage received from sewer service laterals and common private sewer systems.

3. That have been assumed by the City for maintenance responsibility pursuant to 17.32.055. Pumping Station or Lift Station – a facility constructed to lift wastewater by mechanical methods from a deep sewer to a shallow sewer in order that it may continue as gravity flow.

Public Sewer Easement - means a grant of the right by a property owner to the City to use land for placement and maintenance of public sewer facilities.

Public Sewer Service Lateral - means a conduit extending from a public sewer to a private plumbing system of a building, buildings or property. "Public Sewer Service Lateral" is the portion of a conduit that:

1. Is located in a public right of way;

2. Extends from a public sewer or manhole to the curb line, or projected future curb line, if no curb exists;

3. Receives the discharge from a building sewer or common private sewer system; and

4. Is not a common private sewer system.

5. Is City operated and maintained

Public Sewer System - means the entire sewage collection and treatment system, including but not limited to, all City laterals, pipes, conduits, outfalls, pumps, treatment facilities, physical and biological processes, and any other components involved in the collection, detention, transportation, treatment, reuse, and disposal of stormwater, wastewater and sludge.

Rational Formula (Q=CiA) – A formula used for estimating the peak rate of runoff rate from a drainage basin. Q is the peak discharge, cubic feet per second; c is the runoff coefficient; I is the rainfall intensity, inches/hour; and A is the drainage area, acres.

Relief Sewer -- a sewer designed and constructed to carry flows in excess of the capacity of an existing sewer.

Retention Facility– A facility designed to receive and hold stormwater runoff. Rather than storing and releasing the entire runoff volume a portion is permanently retained and infiltrated, evaporated or is used by surrounding vegetation.

Runoff – excess stormwater originating from rainfall that collects and flows across a surface and ultimately reaches a disposal location either directly, or indirectly.

Runoff Coefficient – a unitless number between zero and one that relates the average rate of rainfall over a homogenous area to the maximum rate of runoff.

Sanitary Lateral (Service Lateral or House Branch) - a public or private sewer that discharges into a sewer main which has no other common sewer tributary to it.

Sanitary Sewer -- A sewer that carries liquid and waterborne wastes from residences, commercial buildings, industrial complexes, and institutions together with minor quantities of ground, storm and surface waters that are not admitted intentionally.

Sedimentation Manhole -- A manhole located upstream of a sump or PRF that functions as a small settling basin to trap settleable solids from stormwater before being discharged into the downstream facility.

Separate System – a sewer designed to receive only wastewater or stormwater.

Service Elevation - The lowest elevation determined at a dwelling/building/lot draining by gravity to a public sewer. Often referred to as the "lowest floor served" it can refer to a finished basement floor. Compute this elevation from the dwelling/building/lot to a new sewer or from an existing sewer to a dwelling/building/lot using the method found in the Chapter 5 – Sanitary Sewer Design.

Sewage - waste matter carried away in sewers or drains

Sewer Service Lateral – City maintained sewer to serve private property extending from a main to the curb line of improved public streets or the proposed standard curb location in an unimproved public right-of-way.

Sewer System – all public sewer facilities within the City Service area designed to collect, convey and dispose of sanitary, stormwater and combined sewage and flow. Includes a broad range of facilities such as: sanitary pipe, storm drainage pipe and open channels and combined sewer pipes and related facilities.

Sewer Main – a primary sewer used to collect flow from several sanitary sewer collectors or laterals.

Sheet Flow – uniform flow over plane surfaces without concentration of water into defined channels.

Spring Line - a horizontal plane half the distance between the invert and the crown of a circular pipe.

Standard Location – the designated location in a street or public-right-of-way reserved for the construction of a public utility or utilities.

Steep Slope – an inclined surface whose vertical elevation change increases or decreases at a rate greater than 10 percent (1 foot vertical for every 10 feet horizontal). It also includes any surface of less than 10 percent known to be geologically unstable and prone to soil mass movement and mass wasting and instability.

Storage Facility - A structure designed with an outlet control device to temporarily store excess sewage or stormwater exceeding the available hydraulic or operational capacity

of a downstream sewer. A sewer experiencing intermittent surcharging does not define a storage facility unless the sewer has a flow control device to limit the outflow rate and cause intentional filling and emptying.

Storm Sewer -- a sewer designed to carry only stormwater and surface water and including street flow and other wash waters. Excludes domestic wastewater and industrial wastes.

Stormwater – visible runoff produced from excess precipitation falling on a surface. Also referred to as runoff or stormwater runoff.

Stormwater Management Facility – Refer to the definition found in the Stormwater Management Manual (SWMM).

Street Flow – The total amount of excess stormwater runoff collected in a street gutter.

Sump (Drywell) --a large public drywell, typically 30 feet deep, with perforated sidewalls that function as an infiltration device for the disposal of stormwater runoff from public streets. Public sumps are generally configured with an upstream sedimentation manhole.

The ODEQ permits and regulates sump operation and construction. Refer the ODEQ web page address found in Chapter 1, Companion Documents and Internet Links.

Surcharge - A flow condition, i.e. pressure flow, resulting when the downstream hydraulic capacity is less than the upstream inflow causing water to accumulate and rise above the inside crown of a pipe or facility. It also refers to the greatest measured distance from the water surface above the pipe to the pipe crown.

Surface flow - flow resulting from excess precipitation traveling overland as sheet flow or as concentrated flow in natural channels, streams or structural conveyance systems.

Time of Concentration – the time required for stormwater runoff to travel from the most hydraulically distant point of a drainage basin to a point-of-interest.

Terminal Cleanout – a sewer cleanout constructed at the upstream end of a collector sewer.

Trunk Sewer -- a major sewer that collects flows from many collector sewers and serves a large service area.

Trench Drain - a perforated pipe placed in a trench excavation, parallel and below a sewer main to collect and transport groundwater and surface infiltration and control soil saturation.

Underflow Conduit -- a pipe used to carry a defined amount of dry-weather flow from a combined sewer diversion manhole to an interceptor sewer.

Unit Hydrograph – a hydrograph resulting from a unit depth of excess runoff produced by a storm of uniform intensity and specified duration.

Wastewater – spent water that contains dissolved and suspended matter. See Sewage.

Wastewater Treatment Plant -- A facility designed and operated to remove contaminates and pollutants from wastewater before discharging to a point of disposal.

Water body – a naturally occurring water feature that includes rivers, sloughs, perennial and intermittent streams and seeps, ponds, lakes, aquifers and wetlands.

Watercourse – a channel in which water flow occurs, either continuously or intermittently with some degree of regularity. Watercourses may be either natural or manmade.

Zone of Influence – a theoretical region located adjacent to and below a structure where unsupported excavation could cause soil settlement and structural failure. The upper limit of this region where unsupported excavation may be allowed is generally defined by a plane oriented at 45-degrees below a horizontal plane that extends from a point determined by intersecting the projections of the outermost and lowest points located on the structure in question.

Chapter 1 – Noteworthy Items

§ Use this Manual to design all publicly owned and maintained sewer and drainage facilities.

§ Designers will need to reference both this Manual and the SWMM when completing development requiring sewer and drainage improvements and stormwater management and water quality facilities.

§ This Manual is organized into 8 chapters and a series of Appendices, covering all of the topics a designer will need to complete a development requiring construction of sewer and/or drainage facilities.

§ Manual users are encouraged to suggest modifications and improvements to this Manual. Updating this Manual will occur on a regular, periodic basis.

§ Key Contacts are provided to assist designers with contact information needed navigate the City permits process.

§ The Glossary includes the key terms and their definitions within the context of their use in this Manual.

CHAPTER 2 – PROJECT DELIVERY, PERMITTING, and GENERAL PROCEDURES

Summary of Chapter 2

This chapter introduces the City's delivery process for public sewer projects and includes a list of the requirements when preparing project submittals. There is also a description of the general process for obtaining a Public Works Permit as well as guidelines describing how to prepare and submit a Form to suggest a revision to the Design Manual and the process to obtain a variance from these Standards. The chapter is organized into the following sections:

Introduction
Project Types
General Design Responsibilities
Plan, Specification and Computation Requirements for Sewer Permit Works Permit Application Requirements
Design manual Revisions and Variance Processes

2.1 Introduction

This chapter introduces a designer to the general procedures to be followed when designing and constructing a public sewer project.

A sewer project is classified as either a Local Improvement or a Public Improvement depending on the method of finance. Managing a project can be the responsibility of City staff, a consultant hired by the City or a consultant hired by a developer. Each project manager, regardless of the project type, must complete certain fundamental project responsibilities such as schedule, design, permits and final project documents. BES has drafting standards (refer to Chapter 1, Companion Documents and Internet Links) that all sewer design projects must follow. Public sewer projects must reference the City of Portland Standard Construction Specifications and Plans as well as the City and BES Supplemental Specifications and Special Provisions. Designers are responsible for writing project Special Provisions.

Before accepting ownership of a public sewer, the City must receive and be able to review any documents and materials used in the course of preparing a design.

2.2 Types of Projects

Projects for constructing Public sewer facilities are classified as a Local Improvement or as a Public Improvement. Classification depends upon the selected method of project financing (Code of the City of Portland (Code) Title 17, Chapter 17.04 Definitions).

2.2.1 Local Improvement

A Local Improvement project is financed through assessment of the benefited properties after the formation of a Local Improvement District (LID).

2.2.2 Public Improvement

A Public Improvement employs other means to finance improvements than through the assessment process. A Public Improvement may be constructed either as a Capital Improvement financed with public funds, or as a Permit Project constructed under a Public Works permit issued by the Chief Engineer, BES, and financed by a Permit Applicant ("permittee").

Generally, BES staff assumes responsibility for the design of Capital Projects. BES also employs Consultants for specific Capital Projects requiring special staff needs or technical expertise. A Consulting Engineer under contract to a permittee generally prepares projects requiring a Public Works permit.

Regardless who is assigned to manage a project, each project has specific tasks that must be completed during the project duration. The following paragraphs list the common tasks and activities a manager needs to consider as part of any City project. Those noted items represent a partial list of all activities that could occur during a project. Additional information about project delivery procedures is found in the following three BES documents: 1) Implementation Procedures for Capital Projects, 2) Engineering Services Quality Manual, and 3) Construction Services Procedures Manual.

2.3 General Design Responsibilities

BES defines three project types and classifies them by whoever is assigned responsibility for project management and completion. Project and reporting responsibilities do vary depending on the individual and whether they are a City employee or a hired consultant. The three project types are those that are managed by: 1) BES staff, 2) a Consultant under contract to the City, or, 3) a Consultant under contract to a permittee.

2.3.1 BES Staff

An assigned BES Project Manager (PM) assumes responsibility for the following items:

- Project Work Plan
- Design Memoranda
- Project schedule and budget
- Preliminary and Final Design
- Plan and Bid Document Preparation
- Cost Estimating
- Permitting (County, State, and any other permits)
- Coordinating with the Purchasing Manager for bidding, and with the City Auditor for LID projects only.
- Final Design Report
- Notify (in writing) and coordinate with affected utilities
- Design Oversight during construction

- As-built review
- Final Project report review

The design PM's responsibilities begin at project initiation and extends throughout the life of the project.

A BES Construction Manager (CM) manages day-to-day administrative project duties

during the bidding and award phase, the construction phase, and the project completion (startup/closeout) phase. (See the Construction Services Procedures Manual for additional information.) During construction, the design PM provides design oversight through submittal reviews and by sharing design insight.

Other BES and City staff are responsible for inspection during construction, materials testing, branch location and survey. Inspection personnel prepare the project as-built drawings. BES mapping personnel transfer the reviewed as-built construction information into the City Records System.

2.3.2 Consultant under Contract with the City

Selection of a Consultant follows the procedures outlined in the City's current Manual for Contracting for Professional, Technical and Expert Services (PTE). All of the tasks listed in the previous section is required, however, the division of responsibilities between BES staff and the Consulting Engineer will depend upon the terms of the particular project contract.

2.3.3 Consultant under Contract with a Permittee

A permittee selects an eligible Professional Engineer licensed by the State of Oregon. The BES Development Engineering Division assigns a staff PM to serve as a City contact during the project. The permittee can choose to perform survey work using a private firm or City Survey crews. If the City survey crew performs the work, it will be completed on a time available basis and at cost. Before starting any survey work, the City requires a deposit for the estimated cost.

The Consultant assumes responsibility for the following listed items:

- Surveying or requesting City survey(s)
- Drafting (BES will furnish a copy of the BES CADD Standards Manual including a CD that contains BES AutoCAD support files necessary to prepare BES Project Plans)
- Accumulating background information
- Design
- Assist City with the acquisition of any required easements
- Writing project notes in addition to the BES Standard Permit Notes on the Plans
- Writing any additional Special Provisions
- Estimating material quantities and costs to assist BES in determining permit fee and bond values.
- Obtaining City approval

- Project revision
- Notify utilities
- Permit Applications (e.g. City, County and State and other special permits)

The BES Development Engineering PM assumes responsibility for the following items:

- Manage internal City processes
- Advise Consultant on City Standards, methods and procedures
- Permit application processing
- Coordinate internal reviews
- Provide technical submittal review
- Prepare Project Book from template
- Act as liaison with other City bureaus
- Calculate permit fees and confirm bond requirements

A BES Permit Program Construction Manager (CM) manages a project during construction. During construction, the CM works with the City PM to resolve problems that arise during construction. The CM will involve the permittee's Consultant as necessary to resolve problems during construction.

BES and City staff are responsible for inspection, materials testing, and branch location. BES staff prepares as-built drawings and forwards this information to staff that enters the information into the City's Records System.

All project documents including but not limited to drawings, Special Provisions, survey notes, computations and other documents required by BES become the property of the City.

2.4 Plan, Specification, Computation and other Requirements

2.4.1 Plan Requirements

Construction drawings must include the following items:

- Title block on each sheet
- General notes including any specific design criteria unique to a project including any approved variance from any BES Standards
- Vicinity map
- Drainage basin or district map served by a facility
- Plans
- Profiles
- Details of special structures, appurtenances and other non-standard items not found in the Standard Plans. A Structural Engineer stamp is required on all structural drawings.
- Engineer's stamp on all plans completed under supervision of a registered Engineer. (Note: a digitized or mechanically reproduced stamp is acceptable, but the signature must be the original signature).

Prepare all drawings in conformance with the BES CADD Standards Manual. The CADD Manual has a checklist outlining in more detail the above listed requirements.

For Permit projects, Consultants are advised to seek advice from the assigned PM early in the process to clarify all deliverables. The PM, with input from BES CADD staff, will clarify the CADD requirements and answer questions during the review and approval process.

2.4.2 Specification Requirements

All sewer projects incorporate by reference the City's Standard Construction Specifications. Construct all projects to the current Specifications including all revisions and Supplemental Specifications. Prepare proposed Special Provisions to modify these Standards and any Supplemental Specifications.

2.4.3 Use of Standard Details and Drawings:

The Standard Construction Specifications contain Standard Details and Drawings depicting many facilities and appurtenances for sewer construction. Include relevant Standard Details, Drawings, and special non-standard Details on separate plan sheet(s) in the Construction documents; doing so will provide a complete archive set of project-specific plans and related details in effect at the time the project was designed. When referencing either special, or Standard Details in a project plan set, reference the assigned Detail number as listed in the Standard Construction Specifications.

The following table summarizes revisions made to the existing Standard Details & Drawings. Please note this new information when encountering old references.

Existing References		**Revised References**		
Old Std. Plan #	Title	New Std. Detail #	New Std. Drawing #	New Title (if changed)
4-01	Typical Trench Sections - Backfill & Surfacing	P-100		
4-02	Pipe Bedding	P-101		
4-04	Sewer Pipe Anchor Walls	P-102		
4-05	Sewer Pipe Concrete Encasement	P-103		
N/A	Metal Slope Anchors for Sewer Pipe	P-104		
Fig 1 (4-14)			P-140	MSPCP Top Slab "A"
Fig 2 (4-08-5)			P-141	MSPCP Top Slab "B"
Fig 3 (4-08-5)			P-142	MSPCP Top Slab "C"
Fig 4 (4-08-5)			P-143	MSPCP Top Slab "D"
Fig 5 (4-08-5)			P-144	MSPCP Tope Slab "E" (Reducing Slab for 60" dia.)

Fig 6 (4-08-5)			P-145	MSPCP Top Slab "E" (Reducing Slab for 72"-144")
Fig 7 (4-08-4)	Large Precast Concrete Manhole - Long Base Section Reinf.		P-146	MSPCP Longitudinal Section (60" dia. - 96" dia.)
Fig 8 (4-08-4)	Large Precast Concrete Manhole - Long Base Section Reinf.		P-147	MSPCP Longitudinal Section (108" dia. - 144" dia.)
Fig 9			P-148	MSPCP Top Slabs "A" through "D"
Fig 10			P-149	MSPCP Top Slabs "E" and Base Slab

	Existing References		**Revised References**	
4-06-1 4-06-3 4-08-1 4-08-2	Precast Concrete MH, Precast Conc. MH w/ Precast Base, Large Precast Concrete MH, Large Precast Concrete MH – Types		P-150	MSPCP Precast Concrete Manhole
4-08-3	Large Precast Concrete MH - Bases		P-151	Manhole Cast-in-Place Base & Precast Base Slab
4-14	Top Slab for Precast Manhole		P-152	Top Slabs for Precast Concrete Manholes
4-10	Precast Sump	P-160		
4-11	Sedimentation Manhole with Hood (Rev 6/30/08)	P-161		
4-11-1	Sedimentation Manhole with Baffle	P-162		
4-11-2	Sedimentation Manhole with Elbow	P-163		
4-12	Sampling Manhole	P-164		
4-16	Step for Precast Manhole	P-168		
4-20-1	Manhole Frame - 6" Depth	P-171		
4-20-2	Manhole Frame - 10" Depth	P-172		
4-20-3	36 Inch Manhole Frame	P-173		
4-21	Manhole Riser Ring	P-174		
4-21-1	36 Inch Manhole Riser Ring	P-175		
4-22	Manhole Cover	P-176		
4-22-1	36 Inch Manhole Cover	P-177		
4-22-2	36 Inch Manhole Double Cover	P-178		
4-23	Tamperproof Manhole Frame/Cover 6" Depth	P-179		
4-24	Tamperproof Manhole Frame/Cover 10" Depth	P-180		

4-25	Watertight Manhole Frame/Cover 6" Depth	P-181		
4-26	Watertight Manhole Frame/Cover 10" Depth	P-182		
4-30	Concrete Inlet	P-200		
4-30-1	Adjust Concrete Inlet	P-201		
4-30-2	Inlet Location At Curb Return	P-202		
4-31-1	Concrete Double Inlet - End to End	P-203		
4-31-2	Concrete Double Inlet	P-204		
4-32-1	Curb Inlet	P-206		
4-32-2	Combination Curb Inlet	P-207		
4-32-3	Curb/Gutter Inlet	P-208		
4-32-4	Double Curb/Gutter Inlet	P-209		
4-33-1	Concrete Field Inlet	P-211		
4-33-2	48" Precast Field Inlet	P-212		
4-34	Inlet Frame	P-213		
4-35	Double Inlet Frame	P-214		
4-35-1	Double Inlet Frame-End to End	P-215		
4-36	Inlet Grating	P-216		
4-37	Inlet Grating with Bicycle Protection	P-217		
4-38	Longitudinal Inlet Grating with Bicycle Protection	P-218		
4-39	Inlet Grating	P-219		
4-03-1	PVC Deep Connection Riser	P-250		
	Existing References	**Revised References**		
4-27-2	Piped Inside Drop Connection for Manholes	P-252		
4-27-3	Piped Inside Drop Connection for Manholes 12/21/07	P-253		
4-40	Rain Drain to Gutter	P-256		
4-41-1	Sanitary Sewer Lateral Cleanout	P-257		
4-41-2	Sanitary Sewer Terminal Cleanout	P-258		
4-42	Sanitary Cleanout Frame Foundation	P-259		
4-42-1	Sanitary Cleanout Frame & Cover	P-260		
4-43	Sanitary Cleanout Frame & Cover - Landscape	P-261		

2.4.4 Computation and Other Supporting Document Requirements

To facilitate project review, a designer should provide with the Plans all necessary data requested that supports a design. Supporting information, as applicable to a project, should include but is not limited to the following items:

- Current zoning, pending zone change, current comprehensive plan designation, comprehensive plan amendment request, non-conforming uses and other planning actions
- Applicable Permits
- Area to be served including all features such as utilities, wells, wetlands, etc. including all survey notes and maps
- Completed checklists
- Delineated Tributary or drainage area
- Flow calculations for sanitary and/or storm sewer design
- Test borings and geotechnical report
- Type 1 or 2 Environmental Reports, if required
- Pipe strength calculations
- Structural calculations
- Cost comparisons for alternate designs based on Project Service Life
- Material quantity estimates
- Clear statement of assumptions and methods
- Erosion control plan, conforming to City Code Title 10 Erosion and Sediment Control Regulations
- Operations and maintenance instructions; per Code chapter 17.38.040 Stormwater Quality and Quantity Control Facilities Required
- Flow management facility design
- Traffic requirements, traffic counts
- Planting details (e.g. seed mixes, species)
- Construction cost estimates

2.4.5 Ownership of Documents

Section 17.24.085 of City Code establishes the City as the recipient and Owner of all documents used in the preparation of a sewer design project. The Code requires all plans; specifications, survey notes, geotechnical studies or other original documents prepared or produced during the design or construction of a sewer become City property. On permit projects, before the City accepts an improvement, the assigned PM must receive and acknowledge all relevant design and construction documents.

2.4.6 Consistency

Before submitting Plans for review, the responsible Consultant is responsible for checking all drawings, specifications, notes and computations for consistency, clarity and accuracy.

2.4.7 BES Lacks Permitting Jurisdiction for other City Bureaus or Outside Agencies

BES has no authority to issue permits for work under the jurisdiction of other Bureaus or agencies. Such work shall not be shown on the BES construction drawings, except in enough detail as to clarify the relationship to and effect upon BES facilities and as required by the assigned PM.

2.5 Public Works Permits

2.5.1 Public Works Permit Application Requirements

Title 17 of the Portland City Code requires all persons wishing to construct or alter any public sewer to make an application to BES and obtain a Public Works Permit (City Code Chapter 17.32 Sewer Regulations). **{** XE "Public Works Permit Application Requirements" **}**

BES manages and oversees the Public Works Permit Program. Staff review proposals to modify or connect to a public sewer or implement drainage improvements and issue permits with conditions for completing this work.

BES has updated their rules regarding sewer connection to provide expedited review and approval processes for completing simple sewer extension and connection work and modification of nonconforming sewers to meet current standards. This resulted in the revision of the Short Sewer Extension Permit process to address the increased scope of work required to address nonconforming sewers. This new Permit process is now referenced as the Simplified Permit process.

The City has three possible permit paths (i.e. Levels 1, 2 or 3) for anyone wishing to connect to a public sewer or modify a sewer to serve development. The City will review connection applications and determine which of the three Permit processes apply to the proposed or corrective work.

A Public Works Inquiry is required to gain approval for a Permit under these rules

2.5.2 Level 1 Sewer Connection Permits

The type of work is allowed under a Sewer Connection Permit typically involves connection of a private sewer lateral to either a public sewer or an existing public sewer lateral.

A Level 1 Sewer Connection Permit will be considered for issuance when the applicant

meets all of the applicable conditions or criteria found in Table 2.1.

Any preexisting non-conforming sewer connections that require repair must seek independent connections to a City sewer following the Nonconforming Sewer Conversion Program Administrative Rules

2.5.3 Level 2 Simplified Permit in Public ROW/Easements (formerly Short Sewer Extension Permit)

Simplified Permits are issued to address the modifications and extension of an existing City mainline sewer to serve new development (<100 feet) and to resolve nonconforming sewer situations (<200 feet).

A Level 2 Simplified Permit for work in a Public ROW/Easement will be considered for issuance when the applicant meets all applicable conditions and criteria listed in Table 2.1. Projects that fail to meet any of these criteria will be required to follow the Public Works Permit process or to request a Design Variance from the Standards of the City's Sewer and Drainage Facilities Design Manual.

Before receiving a Simplified Permit, the Permittee/Consultant must submit all the applicable items requested by the assigned BES Project Manager. Items include:

- A complete site plan indicating pre- and post- construction conditions
- Sewer pipe profiles and elevations
- Pipe inverts elevations at manholes
- Up-to-date utility information for the area of work must be shown on the plan and profile
- Pipe sizes, lengths and fitting types
- Pipe material, bedding and slope
- Street grades
- All existing and proposed sewer connections
- Label streets and the location of all easements
- Erosions control methods

After receipt, review and acknowledgment by the Project Manager (PM), a Simple Permit is issued and the applicant can schedule a meeting with the Inspection staff.

2.5.4 Level 3 Public Works Permit Process (no change to text – provided for context)

The Level 3 Permit process is generally initiated by the permittee/consultant; and the City provides guidance and oversight to assure the project conforms to the current standards. The process is complete when approval is received. Generally, the process follows the eight steps described below.

Step 1 Pre-design Meeting. Permittee/Consultant initiates a pre-design meeting with BES staff when the permit involves ONLY sewer construction. At this meeting the assigned BES PM will deliver information outlining the requirements for completing the Permit process. If the project involves a Public Street Improvement then the Office of Transportation, Development Service Division will schedule the meeting.

Step 2 Prepare and Submit Application - Permittee/Consultant submits application to BES for review. Include plans, calculations, Operation and Maintenance (O&M) information and any requested supporting documents.

Step 3 BES Review – BES Development Services staff will review the plans and incorporate their review comments as well as from other BES groups. The BES PM will return a check set to the applicant.

Step 4 Plan Revision - Permittee/Consultant reviews the check set, and revises and resubmits the plans to address the review comments, including a written response to each review comment. Steps 3 and 4 are repeated until the plans receive approval. After receiving approval, the Permittee/Consultant prepares and submits a set of stamped and signed mylars as well as an electronic copy of the project plans.

Step 5 Permit Approval - The BES PM, after receiving the signed mylars, prepares an internal signature routing package and circulates the documents for approval from the BES Chief Engineer. BES will review the cost information provided by the applicant, determine the project permit fee, and confirm any bond requirements.

Step 6 Required Submittals - Before receiving a Public Works Permit, the Permittee/Consultant must submit all the applicable items requested by the PM. A partial list of these items is found in the following section following this paragraph. After receipt and acknowledgment by the PM, a Public Works Permit is issued and the permittee/consultant can schedule a pre-construction meeting with the BES Construction staff.

Before receiving a BES Public Works Permit, the applicant must submit or provide proof to BES of the following listed items.

- Provide a final, complete plan set of mylars stamped and signed by the Consultant
- Pay-in-full all estimated plan review and construction inspection fees
- Submit proof of a Performance Guarantee equal to 100 percent of the estimated construction cost
- Provide proof of Insurance
- Obtain and provide evidence for any required permanent or temporary easements, for both on-site and off-site easements
- Secure all required agency and regulatory permits and approvals (e.g. BDS, Division of State Lands (DSL), and Army Corps of Engineers)
- Submit electronic copy of the final plan set

Step 7 Pre-construction Meeting and Submittals – PM schedules a pre-construction meeting with key project staff. Before this meeting, assigned

construction manager (CM) may request project submittal information. Construction may commence following the successful completion of this meeting and satisfactory review of all the submitted materials.

Step 8 Project Completion - When project construction is complete (i.e., the CM has completed the Final Inspection), the PM will perform a final project accounting to determine whether there are fees owed by the applicant or whether there will be a refund. Fees will be determined on actual time charged, per City Code Chapter 17.32.120 Deposit Required and 17.32.150 Fees for Public Sewer Improvement Permits.

"Table 2.1" summarizes the applicable permit criteria that an applicant wishing to connect to or work on a sewer must meet to obtain one of three permit types issued by the City. Each corresponding level of Permit requires a more involved application and design process to receive approval to perform the desired work.

Table 2.1 Applicable Criteria for Permitting Construction Work on Public Sewer located in the ROW

Applicable Permit Criteria	Permit Types Available for Working on City Sewer		
	Sewer Connection Permit **Level I**	Simplified Permit **Level II**	Public Works Permit **Level III**

Level 1 • Sewer service lateral repairs in the public right of way • All connections to a public sewer main and sewer service laterals • Relocations of existing sewer service laterals (from curb to the main) • Construction and/or extension of sewer service laterals to private property for future use • Repair of private lines in the public right-of-way • Repair of a non-conforming sewer in the public right-of-way. • Manholes are less than 48" diameter	✓		
Level 2 • No sewer main more than 18 feet • No manhole more than 12 feet deep • Does not require a City approved traffic control plan • Does not require any manhole greater than 48 inches diameter • Work does not cross any major utility • Does not involve work on a brick manhole • No Engineering required to design an extension from any City sewer • Does not require extension of a brick sewer or a clay sewer constructed before 2010 • No relocation of any utility • No conflict with the standard proximity rules pertaining to utilities • No Excavation near a structure or retaining wall that requires geotechnical design • No excavation adjacent to a water body or involving groundwater • No work outside of the public right-of-way • No extension longer than 100 feet to serve a development project. • No extension longer than 200 feet to serve a non-conforming sewer. • No extension longer than 200 feet to resolve a failing on-site system. ▯ No sewers greater than 12 inches diameter		✓	
Level 3 • Any Level 2 Criteria not satisfied. • Construct/modify public sewer and appurtenances • Construct any manhole greater than 48" diameter • Construct/modify any public storm facility			✓

2.6 Design Manual Revision and Variance Request

2.6.1 Manual Revisions - The Process for Suggesting Changes to the Manual

Updates to this Design Manual will occur periodically to reflect changes in City policy, the introduction of new materials, or new design techniques. As a Manual user, you can become a part of this revision process in two ways by: 1) Advising BES of any errors or corrections, and, 2) Suggesting technical changes and making proposals for improving its overall quality and usefulness.

Use the Manual Revision Request – Form 2-1 found at the end of this chapter, when requesting a consideration for a change or modification to the Manual. BES will review each request and determine whether to incorporate a suggestion into a later update to this

Manual. BES will issue updates on a periodic basis. Manual users should insert all Manual revisions upon receipt.

2.6.2 The Design Variance Process - Requesting a Change from these Standards

This Manual establishes the design standards for the Bureau; however, it is not always possible or desirable to strictly adhere to these standards. BES has a process to review any proposed design standards variance.

Designers wishing to prepare a design that does not follow these Standards need to complete a Design Variance Request - Form-2-2, found at the end of this chapter.

Step 1 - Prepare a Variance Request

Use the Design Variance Request - Form 2-2 to prepare a request. The request describes the nature of the variance and the need for a departure from these Standards. The information on the form must clearly indicate what the variance is, why it is needed and how the variance differs from the established BES standard.

The project type and who is responsible for the design will dictate which of the following procedures to follow when requesting a variance. Generally, the BES Section supervisor will receive the Variance Request and coordinate the review.

- If the project involves a Local Improvement District (LID), then, the assigned BES staff submits a written request to their supervisor.
- If the project involves a Public Works Permit, then, a Permittee/Consultant submits a written request to the BES Development Services supervisor.
- If the project involves a Capital Improvement Project managed by a Consultant hired by the City, then, the Consultant prepares the variance request to the BES PM, who forwards it to their supervisor.
- If the project involves a Capital Improvement Project managed by City staff, then, the BES PM (either the design PM or the construction PM, as appropriate for the phase of the project) prepares the variance request to their supervisor.

Step 2 - BES Reviews the Request

Design Review Criteria - BES will receive and review any variance request from the design standards in this Manual. Acceptance or rejection of a proposal is based on conformance to the BES Mission Statement (January 2005) and to the City's obligations and authority in Code and Charter to develop and manage sewage facilities that protect public health, water quality and the environment. In addition, any proposed variance must also ensure worker safety and health, maintain operational and performance efficiency throughout the sewer system and provide services at a fair and economical cost to residents.

After receiving a request, the recipient as described in step 1 above, will circulate the variance request form and the reviewer's recommendations for action for review to their Division or Section Manager as well as other divisions or sections within the Bureau and including any other interested City Bureaus.

Step 3 - Provide Supporting Information

If additional information is needed, the requester will be asked to provide the information. If a proposed product requires laboratory testing before approval, the requester will be responsible for all testing and any associated costs.

Step 4 - BES Answers the Request

Following its formal review, BES replies to the request in writing using the Reply section of the Design Variance Request - Form 2-2, found at the end of this chapter. There are four possible replies to a request: Approved, Rejected, Approved With Modifications, and Revise and Re-submit. Generally, the Division Manager or supervisor and the Chief Engineer will sign and reply on the Design Variance Form and return the form to the requestor within 1 to 4 weeks of a request, depending on the complexity. All decisions are final.

A process flow chart figure describing this submittal and review process is found on the following page.

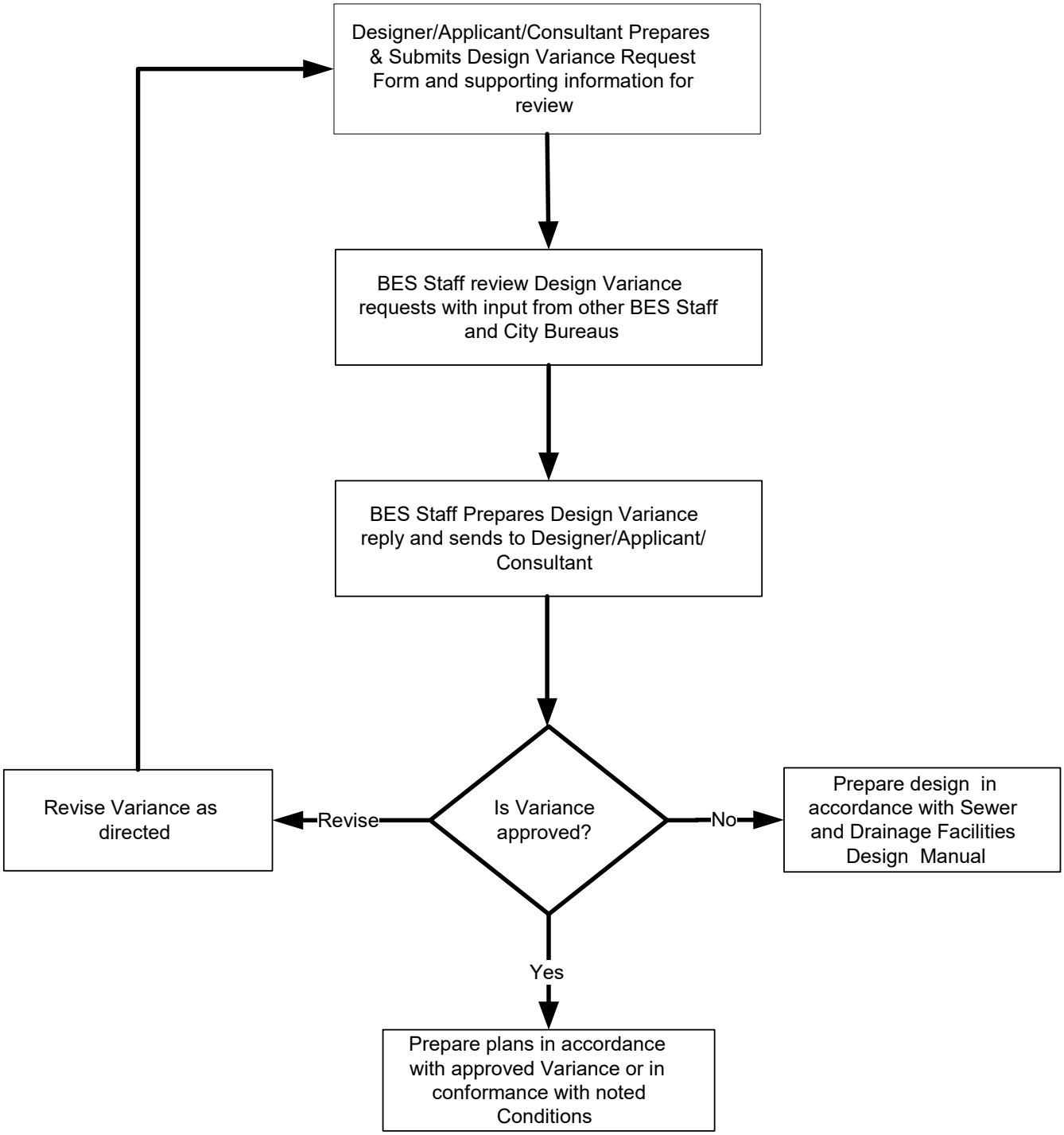

Figure 2.1 Design Variance Request Process

Manual Revision Request - Form 2-1

Date _____

Manual Chapter _____ Section # _____ Page # _____

Manual Users Name _____ Phone (____)_____

Company_____

Address_____

In the space provided below, please present a description of your suggested change or revision. All comments or recommendations for revision are welcome and encouraged to point out discrepancies, suggested modifications, or recommendations for additional information and clarification including examples to be added, etc.

Please include a detailed descriptive reason for the suggested change including supporting documentation. If necessary, attach additional pages to this form

_____

_____

_____

_____

_____

_____

_____

_____

_____

_____

_____

Mail to:

Bureau of Environmental Services – Standards, Specifications and Materials Section
1120 SW 5th Avenue, Room 1100
Portland, OR 97204 -1972
Attn: BES Sewer and Drainage Facilities Design Manual – Proposed Revision

Design Variance Request - Form 2-2

Project Name: _____ Project Number_____

Submitter _____ Date: _____

Project Type (check one): Permit CIP Other _____

Submittal Status (check one): Initial Submittal Revised Submittal

BES Project Manager Name _____

Variance Description: Be thorough. Describe the variance request, why it is needed, and how it differs from the established design standards (cite current standard). Describe how the variance will offer comparable or superior performance over the current standard. Use additional sheets if necessary.

_____

_____

_____

_____

_____

_____

Send to: BES Section Supervisor (see Manual subsection 2.6.2, Step 1)
Or, mail to: Bureau of Environmental Services – Chief Engineer
1120 SW 5th Avenue, Room 1100
Portland, OR 97204 -1972
Attn: BES Sewer and Drainage Facilities - Design Variance Request

Reply Section: (For BES Reviewers use only)

Reviewer's names & initials: _____

_____

_____

Approved as submitted	Approved – Make Corrections Noted
Variance Rejected	Revise and Re-submit

Remarks: _____

_____

_____

_____

_____

Signed: _____ Date: _____
Engineering Services Design Division Manager (Required for all approvals)

Signed: _____ Date: _____
Bureau of Environmental Services Chief Engineer (Required for all approvals)

Chapter 2 – Noteworthy Items

§ Financing a public sewer improvement determines whether a project is defined as a Local Improvement or a Capital Project.

§ BES staff or a consultant hired by BES or a permit applicant can be responsible for project management. Regardless who manages a project there are identified responsibilities and activities that guide project execution.

§ BES has set standards when preparing Plans and Specifications for a public sewer project.

§ Standard Plans need only be referenced for inclusion in a Project Plan set. § BES has prepared a general checklist of some of the important supporting information that a designer may need to submit to BES as part of the supporting the final design submittal. § The City is the ultimate owner of all materials and documents used when completing a public sewer design.

§ BES has an established process to follow when obtaining a Public Works permit. § BES encourages Manual users to suggest improvements and modifications to the Manual. § Follow the Design Variance Process when it is necessary to depart from these standards.

CHAPTER 3 – GENERAL DESIGN REQUIREMENTS

Summary of Chapter 3

This chapter summarizes the general requirements designers need to understand and comply with when completing a sewer project within the City. Topics include an overview of the City sewerage system, service requirements, location and easement standards, survey standards, investigating and coordinating with other underground utilities, geotechnical investigation, and ODEQ review of City projects. This chapter is organized into the following primary sections:

Sewer Location Requirements
Public Easement Requirements
Survey Requirements
Geotechnical Investigation Requirements
Utility Investigation Requirements
ODEQ Review of City Projects

3.1 Project Service Life

BES assumes that all designed facilities operate optimally and continuously during their Project Service Life. Different facilities have differing service lives based upon service characteristics, level of risk, reliability, cost of replacement and other factors. Facilities reaching this age of service could be eligible for replacement although it is not uncommon for a facility to have a physical life longer than its established service life. The Service Life is useful for performing economic analyses when evaluating alternatives. Table 3.1 presents the Project Service Life for select BES facilities.

Table 3.1 Project Service Life for Select BES Facilities

Sewer System Facility Type	Project Service Life, years
Conveyance Pipes	100
Force Main (i.e. pressure sewer)	50
Manhole	50
Sump	30
Mechanical Equipment (e.g. pumps, process equipment)	25
Structure (e.g. pump station, treatment work, etc.)	50
Roadside Ditches	15
Stormwater Surface Retention Facility	30

3.2 Service Requirements

The City Sewer System is designed to collect sewage from lowest floors of all habitable buildings through gravity service where practicable (Reference: ARB-ENB-3.01 - Title 17 Land Division Related Administrative Rules, Administrative Rule Adopted by Bureau Pursuant to Rule-Making Authority.)

3.2.1 Service to Existing and Future Development

Design all sewers and stormwater drainage facilities to carry the flow from all existing and future development occurring within a drainage basin. Use the current Comprehensive Plan zoning designations for future development conditions.

Some areas of the City contain a mixture of combined sewers and separated storm and sanitary sewers. Design each system following the appropriate calculation methods described in this Manual.

3.2.2 Gravity Systems versus Pumped Systems

The City prefers that sewer facilities operate under gravity flow conditions, where practical. (Reference: ENB-4-07 – Sewer Development Service Administrative Rules) Where factors make provision for gravity flow impractical, BES will consider a variance for a pump station or individual building pump system or other alternative. If conditions prevent meeting the minimum requirements for gravity service, an applicant shall submit a Design Variance Request Form (Form 2-2) requesting an exception from these Standards. A request should offer justification why pumping to a public sewer is the preferred alternative. Instructions for completing a Variance Request Form are in Chapter 2.

The following is partial list of the minimum items that must be considered in a Design Variance Request:

- City Maintenance access
- Public Health and Safety
- Potential Environmental Zone impact

Providing service from an existing sewer main to a developed property is subject to more constraints than when building a new sewer to serve vacant land. For example, the elevation difference between the site/building and an existing sewer facility could limit the service depth and prevent gravity service to a basement. Service to existing development has potentially more conflicting off-site and utility issues that influence sewer construction. At a minimum, the City will attempt to serve a property's first floor elevation with gravity service; if this is not possible, a private pump system may be the only option to access a sewer.

3.2.3 Sewer Separation

Design all new sanitary and stormwater sewers as separate facilities designed to convey only wastewater or stormwater. There may be circumstances in areas served with combined sewers when this standard cannot be met. In such cases, the designer is directed to follow the Design Variance procedures provided in Chapter 2 to request a

variance from this standard. The City Code (City Code Title 17.32.080) requires the separation of private storm and sanitary plumbing lines on private property. In combined sewer areas, provide a single public service line to its point of connection with the private portion of the system. Projects to separate an existing combined facility must include provision for service lines to each of the separated private systems.

In all cases, the sewer depth must be sufficient to meet the criteria established for the service lateral size and material, grade, depth, and clearances. Designers must thoroughly analyze site conditions on individual private property that can affect the design of the main line sewer and the service lateral.

The City is committed to provide all lots, whether improved or unimproved, with sanitary sewer service. Providing gravity service is the City's desire but this is not always feasible given the established minimum design criteria as well as other physical sewer system and site constraints. For example, the depth of an existing mainline sewer controls the lateral elevation at its connection to a building sewer. Other physical factors such as site slope and the relationship of the building (i.e. up-slope of down-slope) to the street as well as the elevation of an existing building sewer influence service to a site.

The location of the last service line on a sewer run may determine the termination point (i.e. manhole or cleanout) of the sewer system (Refer to Chapter 4, Cleanouts - When and Where they Can Be Used).

3.2.4 Sanitary Sewers

Design sanitary sewers to collect domestic sewage, industrial wastes and other contaminated water from the lowest floors of all plumbed buildings and from each lot or building site in the City's sewer service area. BES assumes that development of vacant land will include a basement unless otherwise approved.

The City prohibits connecting stormwater drainage facilities to convey surface water; groundwater or foundation drains to a sanitary sewer.

3.2.5 Storm Drainage Facilities

Design stormwater drainage facilities to collect runoff from an entire drainage area and convey it to an approved point of disposal. Design public drainage facilities to provide direct connection for gravity stormwater disposal from private property where no other approved method of disposal is available. On-site disposal is subject to approval by the Site Development Section of BDS. (Refer to Chapter 1, Useful Contacts within the City). The disposal of stormwater into the ground using any device classified as an underground injection facility is regulated by the ODEQ. (Refer to Chapter 1. Companion Documents and Internet Links).

It is the responsibility of the designer to determine the need for a storm sewer service line for stormwater and groundwater disposal from each lot, building site or existing building, and to design the facilities to meet the service needs. Any proposal for on-site disposal of private stormwater must receive written approval of the Plumbing Inspection Section, BDS before BES's approval of public improvements.

The use of sumps and dry wells for public and private stormwater disposal is regulated by the ODEQ under OAR Division 44 Construction and Use of Waste Disposal Wells or other Underground Injection Activities (Underground Injection Control) filed September 2001. These rules define the permitted practices as well as the requirements to construct and operate a sump or drywell anywhere in the State. These regulations are found at the ODEQ website (Refer to Chapter 1, Companion Documents and Internet Links). Public UIC's are also subject to the City's Water Pollution Control Facility (WPCF) permit from ODEQ.

Discharge to Curbed Streets

Foundation drains and/or crawl space drains are required for the majority of buildings constructed in the City. Such groundwater drains are not permitted to discharge to the street surface.

Roof drains from most single-family residences and other buildings of similar size are permitted to discharge to the surface of curbed streets after SWMM requirements are met. Streets with sufficient crown and curb height (i.e. 6-inches minimum) for the discharge pipe may receive this runoff. BES prohibits most commercial and industrial property roof and parking lot drains from discharging to the street surface.

3.2.6 Combined Sewers

Design combined sewers to collect and transport a mixture of sanitary and storm drainage flows. This requires construction of a combined sewer at or below the depth required to provide gravity sanitary and drainage service to buildings throughout the City. Consider all factors influencing the design of separate sewer and storm drainage systems when designing a combined sewer.

3.3 Drainage for Seeps, Springs and Artesian Conditions

Occasions may arise when construction activity intercepts a subsurface or artesian water source that threatens to bring groundwater up to the ground surface where it can impact streets, vehicle operations and other improvements. Designers need to anticipate conditions and consider adding a drain field or similar system to collect this water and manage conditions to minimize any resulting affects. Refer to Figure 3-1 Interception of Groundwater During Construction and Its Management. Depending on the final design solution selected, a facility could fall under the ODEQ UIC rules. A designer shall first review these rules and determine if these regulations affect the siting or use of a selected solution for this purpose. These regulations are found at the ODEQ website (refer to Chapter 1, Companion Documents and Internet Links).

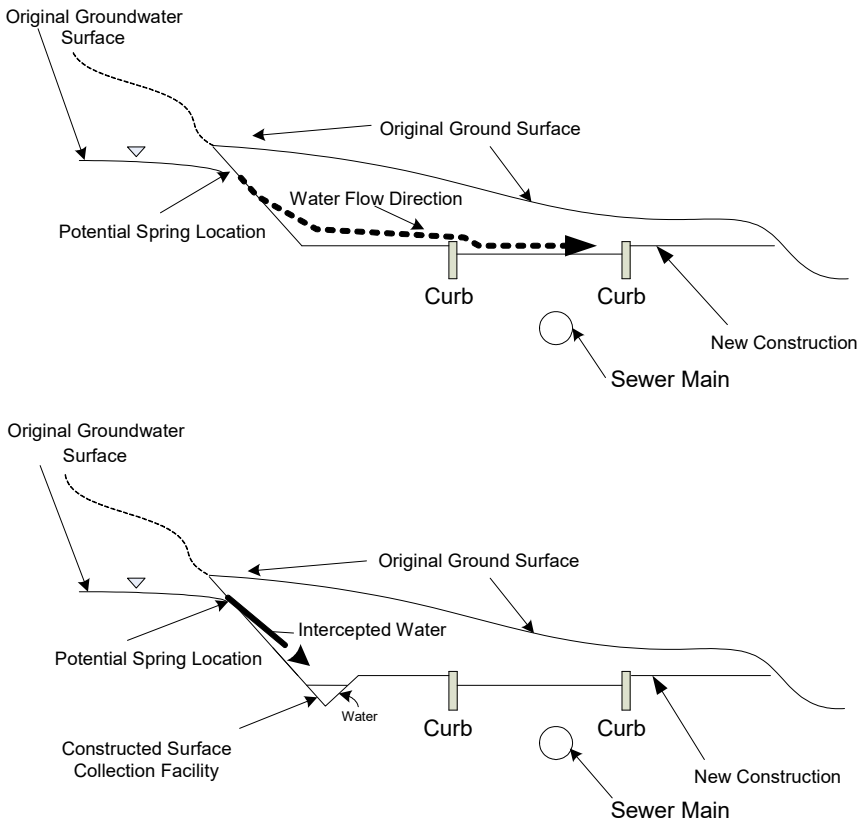

Figure 3.1 Interception of Groundwater During Construction and Its Management

3.4 Standard Sewer Locations

3.4.1 Within a Right of Way

All City sewers shall be constructed in public rights-of-way, wherever feasible or in public sewer easements, when conditions dictate. The following are the standard locations of sewers within public right of ways:

Sanitary sewer and combination sewer:

a) Locate 4 feet north or west of ROW centerline.

Storm sewer:

b) Locate 4 feet south or east of ROW centerline.

Determine sewer locations primarily by the requirements of accessibility for construction and maintenance and of service needs. Sewer construction and street restoration in public rights-of–way are permitted activities and require a Street Opening Permit obtained through the Office of Transportation (Refer to Chapter 1, Useful Contacts within the City). This permit process is separate from obtaining a BES Sewer Permit.

Sewers should normally be located:

- To conform to the applicable Standard Construction Specification Plans (e.g. Plan No's 3-60 and 3-61),
- To conform with the Oregon Health Division, Oregon Administrative Rules (OAR), Chapter 333, Division 61, Public Water Systems, 333-61-0050 (10), Crossings - Sanitary sewers and water lines for separating sanitary sewer and water lines
- When feasible, at sufficient distance outside of the “Zone of Influence” from a wall or building footing, other underground utilities and other obstructions to reduce construction and maintenance hazards, or provide a designed shoring system.
- To avoid logical locations of other planned improvements (e.g. buildings)
- To avoid placement under existing or future paralleling curbs, fences, retaining walls or other impediments to maintenance
- To avoid environmental zones or other identified sensitive areas.

The preliminary design effort should be with the goal of placing all sewers in their standard locations within streets unless those locations are not feasible. These standards apply to a straight street. For curved streets, BES must approve any departure from these standards (see Chapt 4). All sewers shall be located parallel to one another.

If a roadway is asymmetric within the ROW then reference the curb-to-curb centerline to locate sewers.

The existing locations and sizes of other underground utilities or other factors may require a non-standard sewer location. The remainder of the street must be reserved for locating other underground utilities.

3.4.2 Within an Easement

The standard location of a sewer easement is in a private driveway, parking lot, required building setback area, or similar area that will permit unobstructed vehicle access for maintenance purposes.

When proposed for off-street locations, consider site availability, future maintenance, adjacent structures, trees, accessibility, location of natural features, competing use, public relations in the use of an easement, and the impact of an easement on the use of a property. The designer should discuss the location of an easement with the property owner as early as possible during design of the sewer and consider the owner’s wishes and concerns. Avoid undue splitting of property and angling across property.

Avoid any unnecessary damage or destruction of natural features, vegetation or manmade improvements. Consider the probability of future property improvement such as retaining walls or plantings that could create barriers and limit sewer maintenance.

Do not construct a sewer on private property before acquiring an easement or obtaining a right-of-entry through judicial proceedings, except in the case of sewer construction under a permit on property owned by a Permittee. In this case, the property owner must sign the easement and the City must accept it before issuing the Certificate of Completion.

When a sewer extends into private property, show on the final plans the limits of the permanent easement as well as any temporary construction easements. When determining the required widths for the permanent and temporary easements the designer shall consider the access and working room for sewer construction and maintenance. Local conditions may require additional width and/or temporary construction easements. Define an easement considering the sewer depth and size, soils, slope and stability, equipment access, the storage and stockpiling of materials during construction, and future sewer needs as well as maintenance access.

Typically, a sewer easement is reserved for the exclusive purpose of a single utility pipe. If multiple pipes will occupy an easement, BES will review the proposed easement width and determine if additional easement width is required.

The minimum easement width is 15 feet. Table 3-2 presents the minimum permanent and temporary construction easement requirements for different pipe sizes. Additional width is necessary if a sewer is constructed at a depth greater than 9-feet, if the ground slopes more than 10% longitudinally or cross slope, or if more than one pipeline is located in an easement. Within a standard easement, offset a single sewer away from the easement centerline to provide room for access and future maintenance. The general arrangement for a 15' easement is to locate the sewer 5 feet from one edge of the easement to provide 10 feet of working room on the opposite side. For a 20' easement, a sewer is typically placed 8' minimum from one side, leaving 12 feet of working room on the opposite side.

Sewer easements should be as far as practical from buildings. The City prohibits footings and roof overhangs within an easement. The vertical distance between the sewer and the footing must be such that excavating for sewer construction or repair does not endanger the building.

Public sewer easements are for the exclusive use of public sewers. The Chief Engineer, BES must approve in writing construction of any other utility in a public sewer easement. Easement locations must be shown on the plans by distance to known property lines or public rights-of-way lines and, where necessary, by angles.

Provide for adequate access along a sewer easement. Provide an adequate number of access points to allow for entry to an easement; when possible, avoid crossing private property.

In locations where long easements traverse inaccessible areas, the designer must provide access easements at regular intervals to allow maintenance vehicles to access the sewer or drainage facility. The permanent easement must be wide enough to allow for vehicle access. Provide room to turn around taking into account the vehicle or equipment size, ground slope and the feasibility of through access. The maximum slope of the access easement should be less than 10 % longitudinal or cross slope. Where necessary, provide entry gates to prevent unauthorized entry.

The spacing and locations of access easements are highly project-specific and should be located to be cost effective.

Table 3.2 Permanent and Temporary Construction Easement Width Requirements for Sewers

SEWER PIPE SIZE	MINIMUM PERMANENT EASEMENT WIDTH (FEET) [1]	TEMPORARY CONSTRUCTION EASEMENT (FEET) [2]
Less than or equal to 24 inches	15	10
Greater than 24 inches	20	Width to be determined by BES.

[1] The listed easement widths assume level ground having less than 10% longitudinal or cross-slope. Easements on sloped ground will require additional width for maintenance vehicle access. Increase the minimum easement width 5 feet for each 5 % increase in slope above 10 % longitudinal or cross slope.

[2] The temporary construction easement is a separate easement, in addition to the permanent easement width.

3.5 Obtaining Easements - Preparation, Form and Recording

There are several ways for the City to receive an easement.

1. The City may accept an easement by separate document,
2. If the plat recording occurs after sewer construction, dedicate the easement on the plat, or,
3. If sewer construction occurs before plat recording, it is an option to dedicate the easements on the plat.

The City receives public sewer easements through one of three methods.

1. The City purchases an easement;
2. The City purchases private property for a public use through eminent domain;
3. A property owner dedicates an easement as part of the platting process.

The first, (purchase) and second, (eminent domain), are the two methods commonly used for a Capital Improvement project. Easement dedication on the plat is typically associated with a Permit project.

Easement Purchase

As soon as BES identifies, selects and approves an easement location, the BES PM will inform the Right-of-Way Acquisition section of the Office of Transportation Engineering and Development of the need to acquire the easement. The Right-of-Way Acquisition section may request additional information from the designer to complete the easement purchase.

Eminent Domain and Condemnation

The City has the right of eminent domain and may exercise that right through condemnation of land for public sewer construction purposes. When a

demonstrated need and public benefit exists, the City could exercise their right of condemnation. It is not the practice of the City to proceed with condemnation for the sole purpose of promoting or facilitating development when no expanded public need exists. The City Council must approve all condemnation proceedings.

Refer all negotiations for easements and to pursue condemnation to the Right-ofWay Acquisition section, Office of Transportation Engineering and Development. Permittees may negotiate directly with property owners. Permittees must pay all costs of easement acquisition.

Permit Project Easement

Generally, Development Engineering staff review easements originating from a Permit project. A designer should discuss the location with the assigned BES PM as early as possible into the project design process. BES staff will review the easement width and maintenance work areas, constructability issues and suggest any changes to the designer. Show all dedicated and temporary easements the final plans.

The Right-of-Way Acquisition section, Office of Transportation Engineering and Development will prepare easements on the City's standard form with the proper wording of easement conditions. Easements must be in the name of the City and recorded with the County.

All legal property owners must sign an easement. Signature(s) must agree with the name(s) used on the property deed. City Council must accept an easement by ordinance; the City will record the easement with the County.

3.6 Drainage Reserve (City Code Chapter 17.38 and Zoning Code Title 33 Planning and Zoning)

Title 17 authorizes the Director of BES to require a drainage reserve or tract over streams, springs, seeps or drainageways to preserve their function and character. The establishment of these tracts protects the integrity of these features to safely convey water and helps to limit flooding to development locating too close to these features.

Criteria for establishing the tract configuration are in City Code Chapter 33.640 Stream, Springs, and Seeps. The Code specifies that the tract boundary be at least 15 feet from the edges of the stream. The top-of-bank defines the edge of the stream. Construct no private structure; culvert, excavation or fill within this tract unless authorized in writing by the Chief Engineer of BES.

3.7 Survey Requirements

Complete all surveys for sewer design and construction on the ground at the site of the proposed sewer construction. It is not acceptable to establish elevations and locations for sewers from aerial survey topographic maps and other indirect sources. Only a close grid topographic map drawn from ground elevations taken at the site is acceptable. The contour interval should be sufficient to show topographic information at the appropriate

level of detail – usually 1' or 2' interval. When the close grid method is used, it may be necessary to conduct supplemental surveys on the actual sewer alignment. Typical survey interval at the sewer centerline is 50 feet, with 25 feet or less needed if topography variations dictate. When submitting plans for review, flag and provide access for viewing all manholes, ends-of-line, and proposed sewer alignment and any other related facilities.

Permit project applicants shall submit the design survey before the City reviews the plans; submit the construction survey before beginning construction. The City will verify these surveys before construction.

3.7.1 Survey Standard

All surveys must be third order or better.

3.7.2 City Of Portland Datum

All survey and design work prepared for BES must reference the City of Portland datum. The City adopted the current datum in 1896. The Oregon Department of Transportation (ODOT), Federal and local agencies reference either the National Geodetic Vertical Datum (NGVD) or their own adopted datum for vertical survey control. River elevation and flood stage reports for the Columbia and Willamette Rivers reference either the NGVD or another local datum that differs from the City datum.

Designers are responsible to confirm the reference datum of any survey data used for sewer projects and convert this information to the City datum.

The City datum is 1.375 feet below NGVD. Therefore, to convert an elevation from the NGVD to the City datum use the following relationship:

$$(\text{NGVD Elevation}) + 1.375 = (\text{COPdatum Elevation})$$

Equation 3.1 City Datum Conversion Factor

To convert an elevation from the City datum to NGVD, subtract 1.375 feet to the elevation. Information for converting between the City datum and other local datums is found by accessing the Survey section website address at:
http://www.portlandonline.com/transportation/index.cfm?&a=70676&c=35705

3.7.3 Vertical Control

All design projects shall reference the City of Portland datum; tie the design survey to existing City benchmarks. Show the locations and elevations of all City benchmarks used to establish elevations. City benchmark locations and elevations are available from the Office of Transportation Engineering and Development, Survey section or at their City website.

3.7.4 Horizontal Control

All alignment surveys must result in a closed traverse with the ends tied into known points defined with established monuments. Leave no survey loose-ended or tied into indefinite points. Tie all recorded property corners identified in the construction area to provide

intermediate control points (Oregon Revised Statues ORS 209.150 and 209.155). Also, tie buildings, trees over 8” in diameter, retaining walls and waterways.

3.8 Geotechnical Investigations Requirements

Geotechnical investigations are necessary for the proper design of any sewer project. It is necessary to determine the existing soil conditions and groundwater elevations to facilitate pipeline design, and specify the appropriate bedding and backfill, to determine suitable construction procedures, and to design shoring, including specifying parameters for Contractor shoring design.

All Permit projects shall submit a Geotechnical Investigation Report to the assigned BES PM with the plans for review. The PM will coordinate with the City of Portland Materials Testing and Geotechnical Services Group.

Geotechnical investigations should include, at a minimum, the following:

- Prepare a description of the project area topography, landform and geological formation.
- Prepare a plan showing the proposed construction and locations of soil borings or test pits. All location(s) of test pits or soil borings, shall be assigned coordinates and elevations and reference the City of Portland datum. Survey these locations or extrapolate their placement from topography established from the project survey monuments. Do not use an aerial topographic map or other indirect source.
- Develop soil profiles encountered at discrete locations in the project area from a sufficient number of test pits or soil borings to adequately define subsurface conditions. The profiles shall extend a minimum of 5-feet deeper than the planned depth of construction and show the elevation of the water table, if encountered. Prepare soil descriptions in accordance with the following ASTM Standards.

    ASTM D2487-00 Standard Classification of Soils for Engineering Purposes (Unified Soil Classification System)

    ASTM D2488-00, Standard Practice for Description and Identification of Soils (Visual - Manual Procedure)
- Describe any anticipated seasonal water table range of fluctuations, whether or not the water table was encountered in the soil borings.
- Discuss the effect the soil conditions and water table elevations may have on the proposed construction including recommendations for shoring, dewatering and trench bottom stabilization.
- Address trench backfill interaction with site geology.
- Comment on the suitability of native soil for trench backfill as defined by Division 2 of the City of Portland's Standard Construction Specifications.

3.8.1 Utility Investigation Requirements

Underground utility investigation and coordination is vital to proper sewer design. Failure to adequately investigate the depth and location of other utilities, reserve the sewer location, or provide for future utilities can be very costly. It is the responsibility of the designer to investigate the location of existing and proposed underground utilities during the design process. The Designer should document in writing the contacts with Utilities and confirmation of conflict resolution.

The Oregon Utilities Coordinating Council (refer to Chapter 1, Companion Documents and Internet Links for information) is a state agency clearinghouse responsible for notifying utility owners of planned excavation within proximity of a utility. Designers should contact the One-Call Center directly during a pre-design and request a "presurvey" information transfer to determine potential utility conflicts before beginning design. A designer making such a request will only receive utility maps for an area of interest; no utility marking will result from this request. During the design phase, City survey staff will coordinate with the One-Call Center and request that utilities be visibly field marked prior to surveying.

3.8.2 Underground Utility Location

It may be necessary to establish the elevations and locations of existing underground utilities in the field. If so, consider having their locations marked and potholed before starting the survey. Tie all surface indications of any underground utility locations to the survey.

Underground utility investigation should include, at a minimum, the following:

- A field reconnaissance of the proposed sewer route to look for surface indications of existing utilities that may need to be marked or potholed for establishment of the utility location by the surveyor.
- Location of utilities from evidence obtained in the field rather than by measurements taken from the records. Request the survey crew to contact the One-Call Center and have utility locations marked. Coordinate survey work to tie in all marked utilities in the proposed work area.
- Instructions to the surveyors to document the locations and/or elevations of all utilities found, marked or potholed. Document all poles, overhead or underground wires, hydrants and other utilities, which are in the potential work area.
- Research all available records of existing underground utilities in the work area.
- Submit for review the preliminary construction drawings to the Development Review Service of the Bureau of Water Works and to all utility owners that may have or plan to construct facilities in the project area. The preliminary drawings should show the designer's best information regarding the existing utility elevations and locations.
- Upon approval and signing of the construction drawings, submit copies of the plans to all utility owners that may have or plan to locate facilities in the project area.

3.8.3 Addressing and Resolving Utility Relocation Conflicts

The City Engineer has authority through City Code Title 17.16.100 to require utilities to be moved. Resolving any utility conflicts by the Designer should include, at a minimum, the following:

- Notify Utilities in writing of conflicts
- Meet with Utilities to resolve conflicts
- Confirm resolution agreement with Utilities in writing

3.9 ODEQ Review Of City Projects

The Oregon State Department of Environmental Quality (ODEQ) has issued the OREGON ADMINISTRATIVE RULES, REVIEW OF PLANS AND SPECIFICATIONS, CHAPTER 340, DIVISION 52. These rules include information for Sewer Pipelines as well as Raw Sewage Lift Stations. This document describes the minimum requirements for gravity sewer and pump station design and construction.

The purpose of these rules is to "prescribe requirements and procedures to obtain approval of plans and specifications as required by ORS 468B.055 for the construction, installation or modification of disposal systems, treatment works and sewerage systems." The rules require that "except where exempted … all plans and specifications along with other data submitted for the proposed construction, installation or modification project involving disposal systems, treatment works, sewerage systems or common sewers" shall first be submitted to ODEQ for review.

In 1981, ODEQ granted the City of Portland an exemption from this requirement for the submittal of gravity sewer projects to ODEQ for review. The City must still submit pressure systems and treatment works for review. Under this agreement, the City is responsible for reviewing, approving and constructing gravity sewer projects in conformance with the rules of ODEQ, the City's published standards, and the terms of the City's National Pollutant Discharge Elimination System (NPDES) Waste Discharge Permit.

A copy of the DEQ Rules, including the its own appendices, is in Appendix E of this Manual. Copies are also available from ODEQ (Refer to Chapter 1, Companion Documents and Internet Links).

A copy of the NPDES Permit is available from BES. Designers shall become familiar with these documents in order that their designs fulfill the agreement for exemption from the submittal requirements.

3.10 Flow Conversion Factors

Sewer design requires the determination of flow rates for sizing pipes and establishing slope. Report flow rates using different systems of units depending on the preference of a designer, a reviewer, or a group or section in BES that is responsible for a facility design. Some commonly used systems of units for defining flow rate include gallons per minute (gpm); gallons per day (gpd); million gallons per day (mgd) and cubic feet per second (cfs).

BES has adopted the following factors to convert flow information between these commonly used systems of units.

Table 3.3 Useful Conversion Factors

To convert	Multiply by	To obtain
Cubic feet per second	448.8	Gallons per minute
Gallons per minute	0.002228	Cubic feet per second
Cubic feet per second	646,300	Gallons per day
Gallons per day	1.547×10^{-6}	Cubic feet per second
Gallons per day	1×10^{-6}	Million gallons per day
Million gallons per day	1.547	Cubic feet per second

Chapter 3 – Noteworthy Items

§ The City has established Project Service Life criteria for all sewer facilities. These are the minimum service criteria needed when performing Life Cycle cost comparison for alternate designs.

§ Gravity sewer service is the preferred method for collecting and transporting sanitary, stormwater and combined sewage for disposal.

§ All new sewers shall be designed as separate facilities. Private sanitary and stormwater drainage facilities shall be separated up to the property line.

§ Drainage reserves are intended to protect and maintain natural drainage features throughout the City. The Director and Chief Engineer of BES have authority to enforce protection of these features impacted by development.

§ A minimum easement width is 15 feet. Additional width is often required because of ground slope, soil conditions, and sewer depth and maintenance requirements. Temporary construction easements are generally necessary to provide additional width during construction activities.

§ All survey work shall meet third order accuracy. All design work must reference the City datum. Relating City datum surface elevation to NGVD and other datums requires the use of a published conversion factor.

§ Geotechnical Investigations are required for many but the most simple sewer design projects. The contents of a geotechnical investigation are outlined in this chapter. § Utility investigations are encouraged before beginning a design project. State law requires excavators to contact the One-Call Clearinghouse service before beginning any underground excavation.

§ ODEQ authorized the City of Portland to review and approve the design of gravity sewers within its jurisdiction. However, ODEQ retains authority and requires the City to submit for review and approval all pump station and wastewater facility improvements designs occurring within the City.

CHAPTER 4 - GENERAL PIPELINE DESIGN CRITERIA AND PROCEDURES

Summary of Chapter 4

This chapter presents general pipeline, structural and hydraulic design criteria and procedures. Designers will need to reference these data and apply these procedures when designing City sewers. The chapter presents information on available pipeline materials, horizontal and vertical alignment including clearance distances, pipe strength design, procedures for abandoning, and anchoring pipes on steep slopes and manholes design and location criteria. The chapter is organized into the following sections:

Introduction
Pipe Materials
General Horizontal Alignment
General Vertical Alignment
Pipeline Strength Design
Manhole Location and Design
Cleanouts
Abandonment of Sewers, Manholes, Sumps and other Structures
Buoyancy of Sewers
Anchoring Sewers on Steep Slopes
Corrosion and Odor Control Design Considerations

4.1 Introduction

This Chapter presents the minimum standard design criteria common to the design of sewer pipelines and appurtenances within the City of Portland. Use the material in this Chapter in conjunction with material found in other chapters to design sanitary, combined and storm sewers. When designing City sewers, it remains the designer's responsibility to review and verify the applicability of all materials and procedures as they relate to the specific project under design.

4.2 Pipe Materials

The City of Portland Standard Construction Specifications describe a variety of pipeline materials acceptable for use on public projects within the City. BES does not approve, for use in the construction of public sewers, of all the pipe material types presented in the Standard Construction Specifications. Designers shall ensure all designs allow for the use of accepted materials that conform to this Manual and all applicable sections of the Standard Specifications and Standard Details.

At times, the selection and use of an alternate pipeline material may be necessary to address a specific design or construction issue. BES shall receive and review submittal information for these alternate materials before incorporation into a project. Should BES make special consideration to use an alternate product, it will be for the specific project

and circumstances in question and will not be interpreted as a general approval for use elsewhere. A designer proposing an alternate material shall follow the variance process (Refer to Chapter 2, The Variance Process – Requesting a Change from these Standards.) Designers shall provide documentation on the plans citing any alternate material approved for use. If the material specification is lengthy or complex, provide supplemental data to the Special Specifications.

4.2.1 Pipeline Materials

Historically, most public sanitary, combination and storm sewers (including culverts) were of rigid pipe materials. The primary material used has been concrete pipe conforming to either ASTM C-14 (non-reinforced) or C-76 (reinforced). The development and improvement of thermoplastic pipe materials has increased the use of flexible pipe throughout the City. BES has identified a limited number of rigid and flexible pipeline materials as being acceptable for public sewer projects. BES must review alternate materials before their use on any project.

Materials for pipe 15-inches in diameter and smaller - including sanitary sewer laterals - include non-reinforced and reinforced concrete, polyvinylchloride (PVC) or solid-wall high-density polyethylene (HDPE). For pipes larger than 15- but less than 36-inches in diameter, non-reinforced concrete, reinforced concrete and HDPE are suitable materials. Pipe 36-inches in diameter and larger shall use reinforced concrete or HDPE. The design live and dead load conditions as well as depth of burial and constructability factors limit the choice of material available to a designer.

Table 4.1 presents the pipe and joint materials that BES accepts for gravity and pressure sanitary, storm, and combined sewer systems. Designer must note the pipe material, specification and strength class on the construction plans along with the bedding class or method. Do not change pipeline materials between manholes.

Use of Alternate Pipe Materials

A designer may select pipe manufactured to industry standards for special projects or conditions. For example, when a sewer is to be designed to flow under highly surcharged conditions, or where groundwater levels are excessive, reinforced concrete low-head pressure pipe might be considered. In areas where hydrogen sulfide may create corrosion problems, such as downstream from pumping station or pressure sewer discharge, a designer may want to specify PVC, Solid Wall HDPE or Fiberglass pipe be used if available in the required diameter. Other situations involving pipe rehabilitation might require investigation of HDPE stud liner, PVC T-Lock or RCP with extra “sacrificial” concrete or other special protective lining to address project conditions. BES will review any proposal to use pipe material not listed in Table 4.1.

4.2.2 Joints

Each joint or opening provides a potential path for extraneous water and tree roots intrusion. To improve the operational efficiency of a sewer, designers should always attempt to design a system that minimizes the number of joints.

Design all public gravity sewers with standard mechanical joint couplings and fittings. The advent of new pipe materials, increased pipe segment length, and improved mechanical joint/gasket and coupling design help to reduce the number of pathways for infiltration and root intrusion.

Table 4.1 Gravity Sewers - Standard Pipeline and Joint Materials

SEWERS 4-INCHES THROUGH 15-INCHES IN DIAMETER INCLUDING SEWER LATERALS: 6-INCH DIAMETER LATERALS TO NEW SEWERS, 4-INCH DIAMETER LATERALS WHEN TAPPING OR CONNECTING TO EXISTING SEWERS		
Pipe Type and Material	**ASTM Standard Reference**	
	Pipe	**Joint**
Polyvinylchloride (PVC)	ASTM D3034, SDR 35 and 26 AWWA C 900, Class 150	ASTM D3212 ASTM D3139
Non-reinforced Concrete	ASTM C-14, Class 3, ASTM C985	ASTM C443
High Density Polyethylene (HDPE) PE 3408	ASTM D3350, ASTM F714 DR 26, 21, 17 and 11	Standard Mechanical HDPE couplings or fusion welding ASTM D3261
Reinforced Concrete	ASTM C-76, Classes III, IV & V	ASTM C443
Clay	VCP ES ASTM C700	ASTM C425
SEWERS 16-INCHES THROUGH 36-INCHES IN DIAMETER		
Pipe Type and Material	**ASTM Standard Reference**	
	Pipe	**Joint**
High Density Polyethylene (HDPE) PE 3408	ASTM D3350, ASTM F714 DR 26, 21, 17 and 11	ASTM D3261
Non-reinforced Concrete	ASTM C-14, Class 3, ASTM C985	ASTM C443
Reinforced Concrete	ASTM C-76, Classes III, IV & V	ASTM C443
Clay	VCP ES ASTM C700	ASTM C425
SEWERS GREATER THAN 36-INCHES IN DIAMETER		
Pipe Type and Material	**ASTM Standard Reference**	
	Pipe	**Joint**
High Density Polyethylene (HDPE) PE 3408	ASTM D3350, ASTM F714 DR 26, 21, 17 and 11	ASTM D3261
Reinforced Concrete	ASTM C-76, Classes III, IV, & V ASTM C-655 for Class III larger than 108”, Class IV larger than 84” and Class V larger than 72”.	ASTM C443

4.2.3 Fusion Welding

HDPE pipe is the only pipe material that employs fusion welding to join segments. BES accepts as a standard practice the fusion welding of HDPE pipe. BES also allows joining HDPE pipe with standard push-on couplings and mechanical coupling devices as long as the fittings are made from HDPE or steel that are pressure rated compatible with the pipe. Situations when fusion welded HDPE pipe could be used are: slip lining, pipe bursting, force main, where contaminated soil or groundwater exists or on steep slopes.

When encountering contaminated soil, a designer will need to determine the contaminant type. Research has shown solvents with low molecular weight or organic solvents and their vapors can permeate some plastic pipe materials and some elastomeric gasket materials. Material selection must insure no leaching of the contaminant through the pipe wall or joint to the pipe interior. HDPE and PVC gasketed fittings are also subject to this potential leaching.

Only pressure applications and other critical installations require that a data logger record and document the joint quality and integrity of the fusion welded system.

4.2.4 Selection of Pipe Class and Wall Thickness

Polyvinyl Chloride Pipe (PVC) ASTM D3034 and High Density Polyethylene Pipe (HDPE) ASTM F 714.

When bedded and backfilled in accordance with the Standard Detail for Flexible Pipe Bedding (Standard Plan 4-02) both PVC and HDPE pipe are suitable for installation up to 18 feet of cover measured from the pipe invert.

For depth greater than 18 feet, either the contract documents must be modified to provide better bedding/backfill, or specify stronger pipe material, such as Ductile Iron pipe or a thick-walled plastic pipe.

Concrete Pipe ASTM C 14 and ASTM C 76.

Pipe class selection for a new installation for various depths of cover is determined using the information in this chapter as well as the referenced ASTM standards. A designer should note that construction conditions including the bedding, backfill, trench width and all other criteria are assumed to be in accordance with BES specifications and Standard Plans. For conditions that differ from these criteria, special analysis is required to support a design.

Regardless of the pipe type, the design calculations should generally follow the procedures presented in this Manual as well as any additional information available from manufacturer's literature.

4.3 General Horizontal Alignment

Construct sewers with a straight alignment between structures unless BES approves of an alternate alignment. Straight sewers are easier and less costly to inspect, operate and maintain. Sewer alignments must also be parallel to curbs, street centerlines, property lines and/or easement lines.

Before selecting a sewer alignment, a designer is responsible for identifying all existing and proposed facilities and considering the existing underground conditions and underground utilities. The proposed alignment must result in the best overall design considering operation, maintenance and economics.

Locate a sewer to minimize disruption to any environmental resource area such as an environmental protection zone, or wetland, riparian corridor, and areas designated as geologically unstable. By necessity, gravity sewers are typically located along drainage courses, where streams, wetlands, tree protection zones, etc., are likely to restrict a pipe location. Consider all existing environmental resource features and information and avoid disturbance to these areas, when possible.

4.3.1 No Curved Sewers Requiring Pulled Joints and the Use of Blind Bends{ XE "Blind Bends" }

BES does not allow the design or construction of horizontal curved sewer pipe of any size that utilize “pulled” joints or longitudinal pipe bending to achieve a curved alignment. The City will only accept the construction of a deflected pipe alignment that uses a blind bend to locate an angle point between two manholes, or inlets and manholes. Maintenance considerations, avoidance of other substructures and the need to reserve space in the ROW for other utilities are primary factors that determine when deflected sewer alignments are preferred. Construct any sewer adjacent to a deflected sewer on a parallel alignment.

If an alignment between two manholes creates a minor deviation (plus or minus (+/-) 1 1/2 feet) from the “standard sewer location” (Refer to Chapter 3, Standard Sewer Locations), place the sewer on a straight horizontal alignment. Unless, this alignment results in a significant impediment to sewer construction activities, maintenance or other utilities in the street area, only then install a blind bend.

Locate no more than one blind bend between manholes. The horizontal sewer alignment may deviate from the “standard sewer location” referenced to the street centerline. A departure of +/- 3 feet from the standard location is acceptable. Construct a manhole when the alignment falls outside of these limits. All blind bends shall be factory-fabricated.

The design and as-built records must accurately show the distance from manholes to the blind bend; the distance from the sewer centerline at the angle point to the defined street centerline or to the property line; and all horizontal curve information along the defined street centerline.

The maximum allowed deflection angle for a blind bend is a function of the pipe size and maintenance considerations. Table 4.2 defines the maximum allowed horizontal deflection angle for typical sewer pipe sizes including laterals.

Table 4.2 Maximum Horizontal Blind Bend Deflection Angle for Select Pipe Sizes

NOMINAL PIPE DIAMETER, INCHES	MAXIMUM DEFLECTION ANGLE, DEGREES
Sewer Service Lateral	22 1/2° to change direction (1)
Main Line Sewers	
Less than 8	None allowed
10	11 1/4°
12	22 1/2°
Greater than 12	45° (Use two sixteenth bends (22-1/2 -degrees in series) unless otherwise authorized)

Note 1 - Refer to Standard Plan P-262 Sewer Service Lateral to determine the number of bends allowed within right-of-way.

4.4 General Vertical Alignment

Design all sewers on a straight vertical alignment between structures. The current and future service needs and slope determines the depth of a gravity sewer. A pressure sewer (i.e. force main) is not as dependent on either of these factors. Force mains transport flow under pressure and are generally located at a depth less than what is required for a gravity sewer. Regardless of the type of sewer, other factors also influence sewer depth. These include local regulations, underground utilities and existing structures, general topography, and the need to protect the sewer from surface influences (e.g. traffic loads, etc.). Economy, pipe strength limitations and maintenance needs are also determining factors.

Gravity Sewers

Gravity sewers must be deep enough to provide service to all buildings and sites served.

They must also be deep enough to pass, with adequate clearance, under other existing and future utilities. Occasionally, BES allows a sewer to pass over unusually deep or large utilities, especially other sewers. They should not be any deeper than necessary to provide “unrestricted service,” protection from surface influences, and conformance to alignment requirements. The determination of the depth to provide “unrestricted service” must include reasonable allowances for unknown and unexpected conditions, such as the location and depth of future utilities.

At locations where gravity service to a building site is infeasible, BES may permit design of an individual pumped service. BES must review a proposed private pumped service before construction. The BDS Plumbing Inspection Section (Refer to Chapter 1, Useful Contacts within the City) issues the permit for constructing a private sewage pumping system. **Force Mains**

Force mains operate under pressure, are not dependent upon pipe slope and can transport sewage over topographic barriers and over distances where the lack of slope

prohibits gravity service. Because of these characteristics, a force main is installed at shallow depth below the ground surface. A primary factor dictating burial depth is the soil cover needed to protect the force main from surface loads, freeze protection as well as conflicts with other utilities and structures. A force mains' inherent characteristic provides greater flexibility for changing its vertical location and avoiding conflicts. Do not directly connect sanitary service laterals to a pressurized pipe.

Design and construct all force mains to the requirements of the Pump Station Design Manual (Refer to Chapter 1, Companion Documents and Internet Links).

4.4.1 Minimum Depth Determination

BES has established minimum sewer depths and cover requirements for gravity and pressure sewers. (See table) Cover over the top of pipe is determined by the difference between the top of pipe and finished ground elevation. Factors that influence the facility depth include whether it is public or private, its location in a street or in an off-street location, and the City's preference to serve all buildings and sites with gravity service.

Inlet lead pipes connect inlets in series or directly to a sewer main. Because of their location within a ROW, the minimum depth of cover for an inlet lead is less than that required for sewer mains and service laterals. BES developed criteria specifying the minimum cover depth required for inlet leads and alternate pipe materials when this criterion cannot be met. (Refer to Appendix I: Inlets and Inlet Leads for specific design information.)

Table 4.3 Minimum Cover Requirements Over the Top of a Public Sewer

PUBLIC SEWER TYPE	POSSIBLE LOCATIONS	
	a) PUBLIC ROW OR STREET	b) PUBLIC SEWER EASEMENT
Sewer Mains	6 feet	3-feet
Inlet leads	2 feet	2-feet
Force main	3 feet	3-feet

The 2 foot minimum cover depth for an Inlet pipe applies only at the face of the structure where the pipe connects to the inlet.

Refer to Standard Inlet details for additional information.

4.4.2 Minimum Vertical Separation

The following requirements establish minimum vertical sewer separations.

The following criteria assume a sewer lateral being 100 feet long and placed at a 2 percent (1/4-inch per foot) slope.

a. Provide 4 feet plus one-half the diameter of the receiving sewer separation between the lowest habitable building floor served and the invert of the sanitary lateral at the point of connection to the sewer. An allowance of 2 feet is included in the 4 feet

separation for elevation losses in the sanitary plumbing systems. Those are common conditions. The actual conditions may require greater depths. BES may allow lesser depths if properly documented and justified.

b. Provide 2 feet plus one-half the diameter of the receiving sewer between a stormwater or groundwater source (e.g. roof drain, footing drain etc.) and the invert of the storm sewer lateral at the point of connection to a sewer.

c. Provide 1-foot separation between the outside walls of a sewer (e.g. main, lateral, etc.) and any intersecting sewer or utility (excluding water lines).

BES does not consider a request for an exception from these standards based solely on economic factors as being adequate justification to grant an exception. BES will investigate each potential connection for factors that may require greater or lesser vertical distances. (Refer to Chapter 5, Sewer Service Laterals for additional information about sewer lateral design).

BES will consider numerous factors to establish sewer depths that deviate from the standards set forth above. It is necessary for a designer to provide a complete analysis of the need for such a design and submit a Variance Request Form if conditions require deviation from these standards.

4.4.3 Crossing between Sanitary Sewers and Water Lines

The vertical and horizontal separation between sewers including sewer laterals and water lines shall follow the requirements of the Oregon Health Division, Oregon Administrative Rules (OAR), Chapter 333, Division 61, Public Water Systems, 333-610050 (10), Crossings - Sanitary Sewers and Water lines. A copy of this OAR is in this Manual in Appendix F.

The regulations mandate a minimum separation between water and sewer pipes to assure protection of a water supply. Conformance with the regulation allows water and sewer pipes to cross and parallel one another without following any special requirements.

When construction prevents adherence to the specified separation distances use special pipe construction techniques and pipe materials.

Common Trenches and Sewers Parallel to the Water Line

- Do not install a sewer directly above or below a water pipe.
- Do not construct a sewer within 5-feet from the outside wall and below the invert of the water pipe.
- Locate the sewer a minimum of 1-foot away from the outside wall of a water pipe.
- Locate the top of the sewer below the invert of the water pipe. Place the water pipe on an undisturbed earthen bench adjacent to the sewer trench.

When a sewer is constructed more than 5-feet from the outside wall of a water pipe and below its invert

- No special requirements

When a sewer is constructed less than 10-feet from the outside wall of a water pipe but the sewer invert is less than one foot below the invert of the water pipe.

- In this area, construct a sewer using pressure pipe materials. Sewers Crossing Water lines

The minimum vertical separation between a water pipe and a crossing sewer main is 11/2-feet. Increase this separation distance to 2-1/2-feet when the crossing pipe is a sewer lateral.

Figures 4.1 and 4.2 depict the general spatial relationships between a sewer and water pipe. Departure from these specified separation distances require special construction procedures and Bureau of Water Works approval.

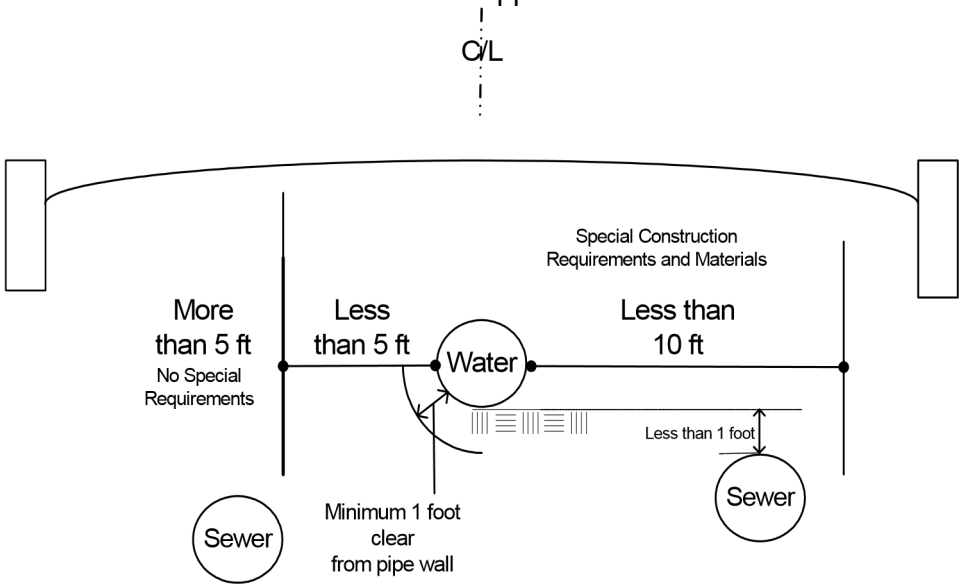

Figure 4.1 Common Trenches and Sewers Parallel to the Water Line

4.4.4 Vertical Alignment - Profile Requirement

A sewer profile (i.e. grade line) depicts the approximate elevation of the ground along the centerline of the pipe route. They are useful for identifying features that could influence design and construction decisions and to estimate excavation and backfill quantities.

For pipelines constructed within or adjacent to an existing roadway, the profile shall reference the existing roadway centerline only if the pipeline centerline is near the standard sewer location and the difference between the ground elevations is less than 1/2-foot. If a roadway is an unimproved street or does not have an established roadway grade, the designer shall contact the Office of Transportation to receive information regarding the elevation of the future roadway. The designer will be required to show the approved centerline profile and label it as being the Future Roadway Centerline.

Pipelines constructed off street shall reference the existing ground elevation over the pipeline centerline as determined from field surveys.

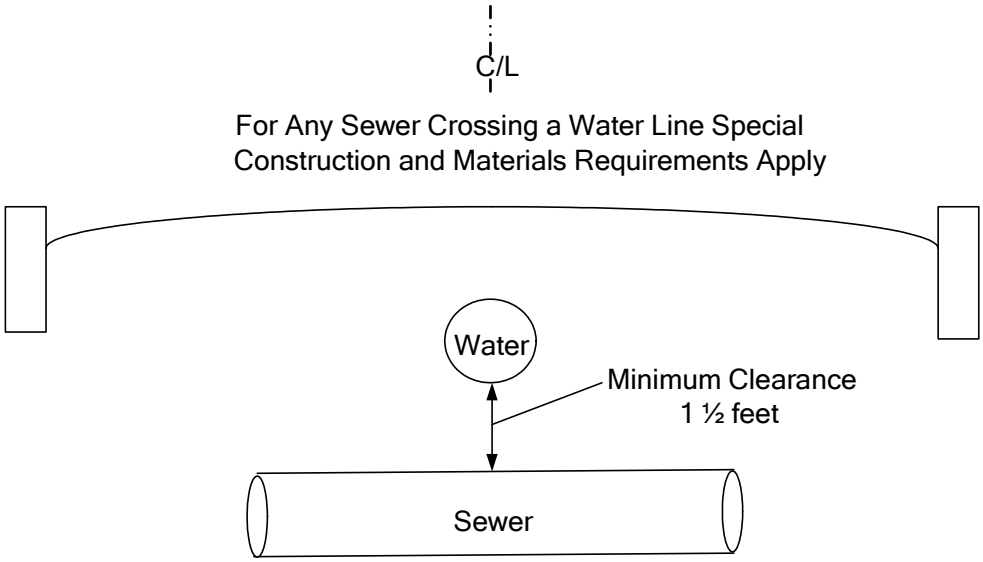

Figure 4.2 Sewers Crossing Water Lines

4.4.5 Determining Sewer Slope between Manholes/Structures

BES calculates a sewer slope by referencing the centerline invert elevation at the center of each manhole/structure and the total distance measured between the centers of each manhole/structure. All calculated inverts entering or leaving a manhole/structure reference the manhole/structure center. Include this information on the Plans. Refer to Chapter 4, Manhole Channel Design.

There are other techniques to calculate sewer slope, however, this method allows surveyors to efficiently field-stake a manhole location and depth to the invert. During construction, BES inspectors use the field stake information and profile data to confirm that invert elevations into and out of manholes/structures are as shown on the Plans.

Show the calculated sewer slope on the profile to four significant figures. Present the information as a percentage. Show this pipe slope on the profile.

To determine the pipe slope, subtract the downstream manhole invert elevation (I.E In) from the upstream invert elevation (I.E. Out) and divide the difference by the total distance between the manhole centers. Multiply this number by 100 to obtain the pipe slope as a percent.

Example 4.1 Calculating Pipe Slope Between Structures
The total distance between two manholes (centerline to centerline) is 304 feet. If the upstream manhole invert elevation is 101.00 and for the downstream manhole, the elevation is 99.00, then the drop between the two manholes is 2.0 feet. Take the invert difference (2.0 feet) and divide it by the pipe distance (304 feet) between manholes. The calculated pipe slope is 0.0066 feet per foot or 0.66 %.

4.5 Pipeline Strength Design

Design all sewers to resist the combined dead and live loads expected upon them for the pipe design life and to avoid differential pipe loading conditions. Pipe designed for the City must have enough strength to resist any stress caused by external loads and internal pressure. It must also possess adequate stiffness to resist deflection and be durable to resist the effects of changing environmental conditions during its design life.

BES has approved for use both rigid and flexible pipe materials in the City. A flexible pipe is one that will deflect a limited amount vertically and horizontally without structural failure distress. Rigid pipe does not meet this deflection criterion.

Appendix A, “Conduits, Culverts and Pipes” by the US Army Corp of Engineers, contains a detailed discussion on loadings and other critical pipeline design factors. This discussion presents valuable technical information that can provide guidance in conducting pipeline design.

4.5.1 Dead (Soil) Loads

Design pipe to support dead loads based on the maximum dry unit weight of the backfill/embedment soil material. BES has selected the following dry unit weight of soil for calculating earth loads for pipeline design.

$$\text{Dry unit weight of soil}(\gamma) = 135 \text{ pounds per cubic foot}\left(\frac{\text{lbs}}{\text{ft}^3}\right)$$

Equation 4.1 Dry Unit Weight of Soil for Pipeline Design

This is the minimum value unless it can be shown that the actual compacted and saturated backfill density will be less. Dead loads shall include any fills that are planned or can be anticipated.

4.5.2 Live Loads

All pipes in streets, highways and other traveled areas must support AASHTO HS-20 live loads in addition to the dead loads. For depths greater than 10 feet, the anticipated HS-20 live loads are negligible. All pipes under railroad tracks must support Cooper E80 live loads in addition to the dead loads.

Investigate off-street sewer locations to determine the potential live loads imposed upon the pipe. Live loads in such locations may result from passage of heavy equipment; storage of heavy materials such as sand, gravel, earth, metal or machinery; fill placement, or other causes. Live loads may significantly influence the design of shallow pipes. Investigate all live loads and submit calculations with the construction drawings.

4.5.3 Types of Pipes and Their Design Strength Standards

Pipe material is classified as either rigid or flexible. This classification acknowledges that rigid and flexible pipe types differ structurally and dictate different testing and construction methods to achieve acceptable performance. Rigid pipe, primarily differ from flexible pipe in the way it resists soil and live loading through the internal strength of the pipe material. Flexible pipe resists loading by transferring the load from the pipe to the surrounding soil. It does this by slightly deflecting downward vertically and outward horizontally. The downward deflection causes a deflection outward horizontally which transfers the load. The nature of a flexible pipe load resistance brings up one very important fact: the proper bedding material and compaction % density for flexible pipe is essential, since the load is resisted by the pipe bedding and surrounding soil.

Pipe made from concrete is a rigid pipe. The basis of strength design method is rigid pipe design principles. The ASTM Standard Three-Edge Bearing (TEB) laboratory test established the pipe strength for developing these principles. The supporting strength of clay and non-reinforced concrete pipe reference the TEB pipe strengths. Reinforced concrete pipe strengths use the “D-load” concept that specifies its strength classification independent of pipe diameter. Use the 0.01-inch crack strength criteria for evaluating reinforced concrete pipe for loading conditions, not the ultimate or crushing strength.

Pipe made from PVC, HDPE and ductile iron is flexible pipe. Therefore, the method of strength design uses flexible pipe principles. The required pipe wall thickness is determined by considering internal pressure and trench load separately. For gravity sewers, there is no internal pressure, only trench-load and live loads, if applicable.

Table 4.1 lists the flexible and rigid pipe materials including their strength class that are accepted by BES for constructing City sewers.

4.5.4 Rigid Pipe Design

Soil loading for rigid pipe relies on the Marston load theory. The general form of the equation is:

$$W = C \gamma B^2$$

Where:

W = Vertical load per unit length of soil prism acting on the pipe, lbs/ft^2 C = Dimensionless coefficient accounting for trench conditions and pipe depth © = Dry unit weight of soil =135 lbs/ft^3

B = Trench width or outside pipe diameter determined as function of the installation conditions, feet

Equation 4.2 Marston’s Load on a Rigid Pipe

For rigid pipe, a key criterion to determine the soil load is the “transition width.” The “transition width” is the trench width at which the soil load is at a maximum. As the trench width increases up to the “transition width” the load on the pipe continues to increase. After reaching the ‘transition width” soil load on the pipe does not increase. Measure the

trench width at the top of the pipe. A "transition width" varies with depth of cover and pipe diameter. The Concrete Pipe Design Manual has tabulated data and design aids to calculate the external pipe dead and live loads based on this design methodology and determining the required pipe strength to withstand those loads.

Tables 4.4 and 4.5, Maximum Allowable Depth to Invert for Circular Concrete Pipe for Class C and B Bedding Conditions, present the maximum allowable depth of burial for concrete pipe under the most commonly occurring conditions encountered in the City. Only use the tables when the installation conforms to the conditions outlined in the footnotes.

Table 4.4 Maximum Allowable Depth To Invert For Circular Concrete Pipe, Class B Bedding

Size, Inches	ASTM C-14 NON-REINFORCED	ASTM C-76 REINFORCED		
	Class 3	Class III	Class IV	Class V
6	22.0	--	--	--
8	17.5	--	--	--
10	14.5	--	--	--
12	12.0	9.0	13.5	20.0
15	11.5	9.5	14.0	21.0
18	11.5	10.0	14.5	21.5
21	12.0	10.5	15.0	22.5
24	12.5	11.0	15.5	23.5
27	12.0	11.5	16.0	23.5
30	12.0	11.5	16.5	24.0
36	11.0	12.5	17.5	24.0
42	--	13.0	18.0	25.5
48	--	14.0	18.5	26.5
54	--	14.5	19.5	27.0
60	--	15.5	20.0	28.0
66	--	16.5	21.0	28.0
72	--	17.5	21.5	28.5
78	--	18.0	22.0	29.0
84	--	19.0	23.0	29.5
90	--	19.5	24.1	30.5
96	--	20.5	24.5	31.0
102	--	21.0	25.7	31.5
108	--	22.0	26.5	32.5
114	--	22.5	27.2	33.0
120	--	23.0	28.0	34.0

NOTES:

- Depths are for pipes placed with **CLASS B** bedding. Bedding factor (B_f) = 1.7 (Refer to Standard Plan 4-02)
- The weight of the compacted soil over the pipe does not exceed 135-lbs./cubic foot
- Assume a trench width, measured at the top of the pipe, equal to or greater than the **Transition Width**.
- All depths are in feet measured to the inside **invert** of the pipe.

- The H-20 live load is insignificant when the listed depth minus the wall thickness (OD-t), in feet, is greater than 10 feet.

THIS TABLE MAY ONLY BE USED FOR INSTALLATIONS CONFORMING TO THE FOLLOWING:

- The pipe is constructed of concrete manufactured to ASTM C-14 or C-76 Standards.
- The pipe will **NOT** be subject to any additional load except backfill & AASHTO HS-20 highway loading.
- The minimum cover over the **top** of the pipe is 3.0 feet. A special load analysis is required for pipes with less than 3.0 feet of cover.

Table 4.5 Maximum Allowable Depth To Invert For Circular Concrete Pipe, Class C Bedding

Size, Inches	ASTM C-14 NON-REINFORCED	ASTM C-76 REINFORCED		
	Class 3	Class III	Class IV	Class V
6	20.0	--	--	--
8	16.5	--	--	--
10	13.5	--	--	--
12	11.0	8.0	12.0	18.0
15	10.5	8.5	12.5	18.5
18	10.5	9.0	13.0.	19.0
21	11.5	9.5	13.5	19.5
24	12.0	9.5	14.0	20.0
27	12.0	10.0	14.5	20.5
30	12.0	10.5	15.0	21.0
36	12.0	1.6	15.5	22.0
42	--	12.0	16.0	22.5
48	--	13.0	17.0	23.5
54	--	13.5	17.5	24.0
60	--	14.5	18.5	24.5
66	--	15.5	19.0	25.5
72	--	16.0	20.0	26.0
78	--	17.0	20.5	26.5
84	--	17.5	21.5	27.5
90	--	18.5	22.5	28.0
96	--	19.0	23.0	28.5
102	--	20.0	24.0	29.5
108	--	20.5	25.0	30.0
114	--	21.0	25.5	31.0
120	--	22.0	26.5	32.0

NOTES:

- Depths are for pipes placed with **CLASS C** bedding. Bedding factor (B_f) = 1.5 (Refer Stnd Plan 402)
- The weight of the compacted backfill over the pipe does not exceed 135 lbs. / cubic foot
- Assume a trench width, measured at the top of the pipe, equal to or greater than the **Transition Width**.
- All depths are in feet measured to the inside **invert** of the pipe.
- The H-20 live load is insignificant when the listed depth minus the wall thickness (OD-t), in feet, is greater than 10 feet.

THIS TABLE MAY ONLY BE USED FOR INSTALLATIONS CONFORMING TO THE FOLLOWING:

- The pipe is constructed of concrete manufactured to ASTM C-14 or C-76 Standards.
- The pipe will **NOT** be subject to any additional load except backfill & AASHTO HS-20 highway loading.

The minimum cover over the top of the pipe is 3.0 feet. A special load analysis is required for pipes with less than 3.0 feet of cover.

4.5.5 Flexible Pipe Design

Soil loading for flexible pipe uses the concept of a prism load, that is, the weight of the column of soil directly over the pipe for the full height of the backfill (see Figure 4.3). The formula for the flexible pipe prism load is:

$$P = \frac{\gamma H}{144}$$

Where P = Prism load, pounds per square inch, (psi)
© = Unit weight of soil prism over pipe = 135 lbs/ft^3
H = Height of soil column over the top of the pipe, feet
Note: The value 144 in the denominator is a conversion factor.

Equation 4.3 Flexible Pipe Trench Prism Load

Appendix C, "Deflection: Pipe/Soil Mechanism", by Uni-Bell PVC Pipe Association and Appendix D, "Book 2, Chapter 7, Buried Pipe Design", by Chevron-Phillips Chemical Company LP provides relevant and useful information in conducting plastic pipe design.

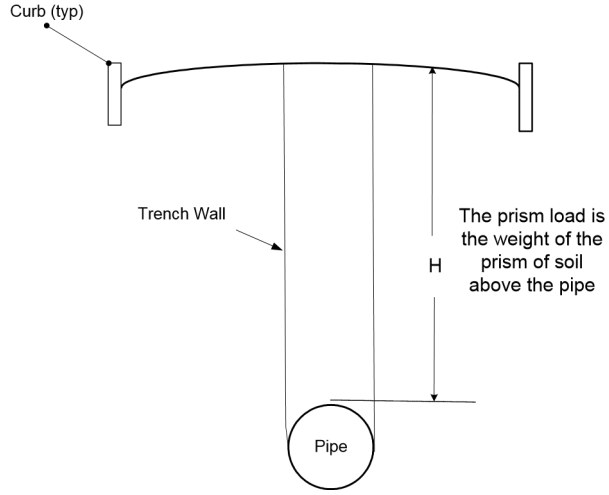

Figure 4.3 Trench Soil Prism Load

Long-term Deflection Calculation

There are a number of issues affecting the design of flexible pipe. One of the most important design considerations is deflection. Since flexible pipe is supposed to deflect, controlling and limiting the amount of deflection to avoid buckling is the key concern.

Vertical deflection is determined using a transposed Modified Iowa Equation where the pipe dimension ration (SDR or DR) replaced the moment of inertia and the pipe radius resulting in the following form:

$$\Delta\% = \times \frac{D\,KP^{L}}{\frac{2E}{\left(3(DR-1)^{3}\right)} + 0.061E'} \left(100\right)$$

Equation 4.4 Transposed Modified Iowa Equation

Where:

□%	=	Long-term vertical pipe deflection, percent
D_L	=	Deflection lag factor, dimensionless
K	=	Bedding factor, dimensionless
P	=	Soil prism load, psi (see above)
E	=	Pipe modulus of elasticity, psi
E	=	Soil modulus of reaction, psi
SDR or DR	=	Pipe dimension ratio (OD/pipe wall thickness)

Refer to Table 4.6 for various Flexible Pipe Design Parameters used in the Equations and Examples in this Chapter.

Table 4.6 Flexible Pipe Design Parameters

DESIGN PARAMETER	VALUE
Deflection Lag Factor (D_L)	1.5
Bedding Factor (K)	0.10
Modulus of Elasticity (E)	
PVC	400,000
HDPE	110,000
Steel, Ductile Iron, Cast Iron	29,000,000
Poisson's Ratio (v)	
PVC[1]	0.38
HDPE[2]	0.42
Steel, Ductile Iron, Cast Iron[3]	0.30
Allowable Maximum Deflection (□%)	
PVC, HDPE	5%

Notes:

[1] Reference: PVC Handbook
[2.] Reference: Internet Source
[3.] Reference: Buried Pipe handbook

Wall Buckling

Wall buckling may govern design of flexible pipe if the external load exceeds the compressive strength (i.e. stiffness) of the pipe material. Buckling phenomenon, results from loading caused by from internal vacuum, external hydrostatic pressure or high soil pressures in compacted soils. For a circular ring the critical buckling pressure is expressed as:

$$P_{cr} = \frac{2E}{\left(\frac{\quad}{1-\upsilon^2}\right)(DR-1)^3}$$

Where: P_{cr} = Critical buckling pressure
E = modulus of elasticity, psi
υ = Poisson's Ratio. Use 0.38 for PVC or 0.42 HDPE
SDR or DR = Dimension Ratio

Equation 4.5 Critical Wall Buckling Pressure

When pipes are buried in such a manner that the surrounding medium provides some resistance against buckling or deflection the buckling pressure in the soil (P_b) in the soil has been found to be:

$$P_b = 1.15\sqrt{P_{cr} E'}$$

Where P_b = Buckling pressure in a given soil, psi
E = Modulus of Soil reaction, psi

Equation 4.6 Critical Wall Buckling Pressure (Scandinavian)

Soil Modulus of Reaction (E)

The soil modulus of reaction (E) is a measure of the embedment material and surrounding soils' ability to support the loads transferred by the deflection of flexible pipe. A composite E value is used. The composite E value includes several factors that consider the pipe and trench geometry, the E value of the native soil and the E value of the embedment material.

The composite E is determined using Leonhardt's formula:

$$E' = z \times E'_b$$

Equation 4.7 Leonhardt's Modulus for Soil Reaction

Where:

E = Composite soil modulus of reaction, psi

E_b = Soil modulus of reaction of embedment (i.e. bedding), psi

z = Leonhardt's zeta factor (see derivation of factor below)

Example 4.2 Flexible Pipe Burial Depth

Given: PVC ASTM D3034 SDR 35 sewer pipe with a 400,000 psi modulus of elasticity is confined in a saturated soil providing E = 200 psi,

Required: What height (H) of the saturated soil which weighs 135 lbs/ft3 (w) would cause buckling?

$$P_{cr} = \frac{2(400{,}000)}{(1-(0.38)^2)\,(35-1)^3} = 23.8 \text{ psi}$$

$$P_b = 1.15\,2\sqrt{23.8\,(200)} = 79.3 \text{ psi} \cong 11{,}400 \text{ psf}$$

$$H = \frac{P}{w} = \frac{11{,}400 \text{ psf}}{135 \text{ pcf}} \cong 84 \text{ feet}$$

The Leonhardt's Zeta Factor formula is:

$$z = \frac{1.662 + 0.639\left(\frac{B_d}{B_c} - 1\right)}{\sqrt{\left(\frac{B_d}{B_c} - 1\right) + \left(\frac{B_d}{B_c} - 1\right)\left(\frac{E_b}{E_n}\right)}}$$

Where:

z	=	Zeta factor, dimensionless
B_d	=	Trench width, feet or inches
B_c	=	Pipe outside diameter, feet or inches
E_n	=	Soil modulus of reaction for native soil, psi
E_b	=	Soil modulus of reaction for bedding, psi

Note: B_d and B_c must be of the same unit of measurement.

Equation 4.8 Leonhardt's Zeta Factor Formula

Select the appropriate E values for bedding and native soil from Table 4.7. Typically, flexible pipe embedment is crushed rock material; therefore, the value for crushed rock material would be taken from the "Coarse-grained soils with little of no fines" column.

Table 4.7 Average Values of Modulus of Soil reaction E' (for Initial Flexible Pipe Deflection)

SOIL TYPE BEDDING MATERIAL (UNIFIED CLASSIFICATION SYSTEM)	E' FOR DEGREE OF COMPACTION OF BEDDING, PSI			
	DUMPED	SLIGHT < 85% PROCTOR 40% RELATIVE DENSITY	SLIGHT < 85%-95% PROCTOR 40% - 70% RELATIVE DENSITY	SLIGHT > 95% PROCTOR > 70% RELATIVE DENSITY
Fine grained soils (LL>50)[b] Soils with medium to high plasticity CH<MH, CH-MH	No data available, consult a competent soils engineer, otherwise use E' = 0			
Fine grained soils (LL<50) Soils with medium to no plasticity, CL, ML, ML-CL, with less than 25% coarse –grained particles	50	200	400	1000
Fine grained soils (LL<50) Soils with medium to no plasticity, CL, ML, ML-CL, with more than 25% coarse –grained particles Coarse grained particles with fines GM, GC,SM, SC contains more than 12% fines	100	400	1000	2000
Coarse-grained soils. Little of no fines GW, GP, SW, SP [c] contains less than 12% fines	200	1000	2000	3000
Crushed rock	1000	3000	3000	3000

Notes:
Standard proctors in accordance with ASTM D698 are used with this table.
Values applicable for fills less than 50 feet. Table dos not include safety factor. For use in predicting initial deflections only, appropriate Deflection Lag factor must be applied for long-term deflection. [a] ASTM designations D2487, USBR Designation E-3. [b] LL = Liquid Limit
[c] Or any borderline soil beginning with one of these symbols (i.e. GM-GC, GC-SC).

4.6 Manhole Location and Design

Manholes are located throughout the sewer systems primarily to provide safe and easy access for both maintenance personnel and equipment. Typically, BES does not approve cleanouts for this purpose but under specific circumstances, will accept them as an acceptable alternative to a manhole. Refer to Chapter 4, Cleanouts – When and Where They Can Be Used.

4.6.1 Types of Manholes

Design all manholes as complete pre-cast units. During construction, the option is given to construct the base as either pre-cast or poured-in-place concrete. The minimum manhole diameter is 48-inches and the maximum diameter is 120-inches.

Owing to the overall age of the City sewer system, designers regularly encounter brick and monolithic concrete manholes. Construction involving brick and monolithic concrete manholes requires an understanding and experience working with these structures. The Bureau of Maintenance (BOM) typically leads any effort requiring work on these structures.

Example 4.3 Flexible Pipe - Long-term Deflection

Given: An 18-inch solid wall HDPE storm sewer will be placed in a clay soil at a depth of eighteen feet to the invert. The proposed DR ratio is 26. For HDPE pipe: Allowable deflection = 5% and Modulus of Elasticity (E) = 110,000 psi.

Required: What is the long-term deflection, and is the deflection within allowable limits?

At a depth of 18 feet, any live (HS-20) truckload is negligible. Calculate the soil prism load above the pipe. The load from the soil prism is:

$$P = \frac{135\ \text{lbs}/\text{ft}^3\ 15.1\text{ft ft} \times}{144\ \frac{\text{in}^2}{\text{ft}^2}} = 14.2\ \text{psi}$$

Determine Leonhardt's Zeta factors:

At a depth of 16.5 feet, for crushed rock bedding, use E_b = 1,100 psi

For native soil, use E_n = 800 psi and pipe OD (B_c) use 18-inches

Given that the pipe OD (B_c) is 18-inches the trench pay width (Ref: 204.4.01C Standard Construction Specifications) is B_c +12 inches. Solving the Leonhardt's Zeta Factor formula for "z" yields the following:

$$z = \frac{1.662 + 0.639\left(\frac{30\text{inches}}{18\text{inches}} - 1\right)}{\left(\frac{30\text{inches}}{18\text{inches}} - 1\right) + \left(1.662 - 0.631\left(\frac{30\text{inches}}{18\text{inches}} - 1\right)\right)\left(\frac{1{,}100\text{psi}}{800\text{psi}}\right)} = 0.80$$

Determine the Composite E' value using the calculated and assumed values

$$E' = 0.80 \times 1{,}100\text{psi} = 880\text{psi}$$

The calculated long-term deflection is (equation was revised)

$$\Delta\% = \frac{1.50.115.55\text{psi}}{\left(\frac{2\ 110{,}000\times}{3\ 26\ 1(-)^3}\right) + 0.061\ 880\times\text{psi}} \times 100 = 4.0\%$$

This calculated value is less than the 5% maximum allowable long-term deflection. The pipe is ok for the design conditions.

4.6.2 Horizontal and Vertical Manhole Locations

BES requires a manhole whenever specific conditions occur. There are circumstances when BES will grant an exception to some these rules. These are both listed in Table 4.8.

Locate manholes to avoid conflict with other utilities and improvements. Designers must be aware of potential conflicts and try to avoid locating manholes in sidewalks or parking areas unless approved by BES or in the wheel-travel-lanes of public roads.

When the manhole frame and cover encroaches into a sidewalk and curb, the designer shall indicate on the drawings to rotate the top section (i.e. cone) and frame and cover to be clear of the sidewalk and curb.

Table 4.8 Circumstances Requiring Manholes and Exceptions

CIRCUMSTANCES THAT REQUIRE A MANHOLE	CIRCUMSTANCE WHEN BES COULD APPROVE AN EXCEPTION
At every grade break	
At every change in alignment	Refer to Chapter 4, No Curved Sewers Requiring Pulled Joints and the Use of Blind Bends
At every change in size of the sewer	
At every present or future junction with another sewer	Refer to Chapter 5, Sewer Service Laterals
At every abrupt elevation change of the sewer	
At the upper end of all sewers	Refer to Chapter 4, Cleanouts – When and Where They Can be Used
At a storm inlet where it connects to a sewer that is less than 24-inches in diameter	
At a storm inlet where it connects to a combined sewer and the escape of sewer gas and odor is possible,	
At all private connections where the diameter of the private line exceeds onehalf the diameter of the public sewer	Refer to Chapter 5, Sewer Service Laterals/Pipe Size and Material

4.6.3 Maximum and Minimum Spacing between Manholes

The maximum spacing between manholes shall not exceed 500 feet without BES approval. The desired minimum distance between the outside walls of adjacent manholes is 5-feet.

4.6.4 Manhole Design

Standard Plans for manholes are found in the Standard Construction Specifications; these Plans are suitable for most conditions. Use a Standard Plan unless it is not appropriate for a project. If a special design is required for any reason, it will be necessary to show the detail on the construction drawings and to provide structural calculations, as needed.

Provide manholes in accordance with the Standard Plans and the Manufacturer's Standards for Precast Concrete Products (MSPCP, 2005). (Refer to Chapter 1, Companion Documents and Internet Links). The designer shall review these standard details for the following requirements: depth of pipe, type of pipe material, and other factors discussed in the following paragraphs.

Design all manholes with sufficient inside dimensions to perform inspection and cleaning operations and to allow for proper channel construction. During the preliminary design phase, the designer shall determine the appropriate size and orientation of each manhole.

Manhole selection is a function of the size of the incoming and outgoing pipes, their geometry as well as the depth of the sewer. The following paragraphs present the BES standards that guide manhole selection.

4.6.5 Pipe to Manhole Geometry

Table 4.9 presents minimum pre-cast manhole diameters and the maximum sewer sizes adjusted for their orientation entering and exiting from a manhole. (Also see Figures 4.4 and 4.5) These standards apply when installing a new manhole and when connecting a new sewer to an existing manhole but not when setting a manhole over an existing sewer.

All pipes connecting to a manhole shall maintain a minimum separation of 1-foot vertically and horizontally between the outside edges of each core hole in the manhole wall that will receive a pipe. The information in Table 4.9 assumes the maximum sewer size and deflection angle between incoming and outgoing sewers for a given manhole diameter with no other pipe connecting to the manhole. When connecting a new sewer to an existing manhole maintain 1-foot of clearance vertically and horizontally as for new construction.

When a designer cannot achieve the specified clearance between the outside walls of a new sewer and an existing sewer provide an offset design for the new sewer into the manhole. Offset sewer connections will require details and dimensions shown on the plans (See Figure 4.6).

Table 4.9 Minimum Diameter Precast Manhole for Maximum Sewer Sizes

MANHOLE DIAMETER, INCHES	MAXIMUM PIPE SIZE (INCHES) FOR LISTED DEFLECTION ANGLES		
	0 (THROUGH PIPE)	45	90
48	30	24	15
60	42	36	18
72	48	42	30
84	60	54	36
96	66	60	42
108	72	66	48
120	84	72	54
144	96	84	60

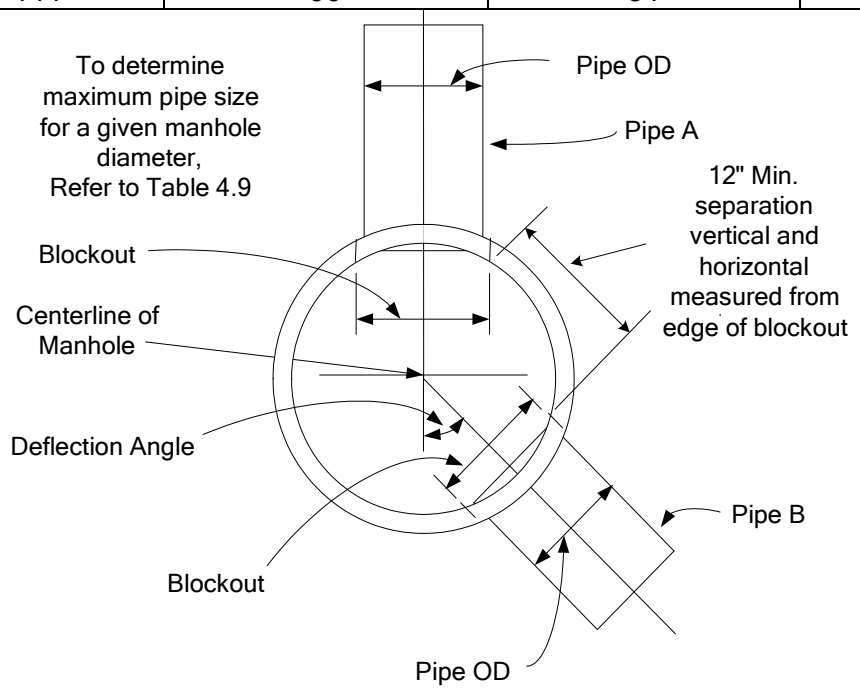

Assumptions:

- Minimum twelve inches separation between pipe knockouts
- Concrete "B" wall pipe
- Pipes entering and exiting are the same size, material and at the same elevation (i.e. manhole invert)
- Vertical separation was not considered

Figure 4.4 Minimum Diameter Precast Manhole for Maximum Sewer Sizes

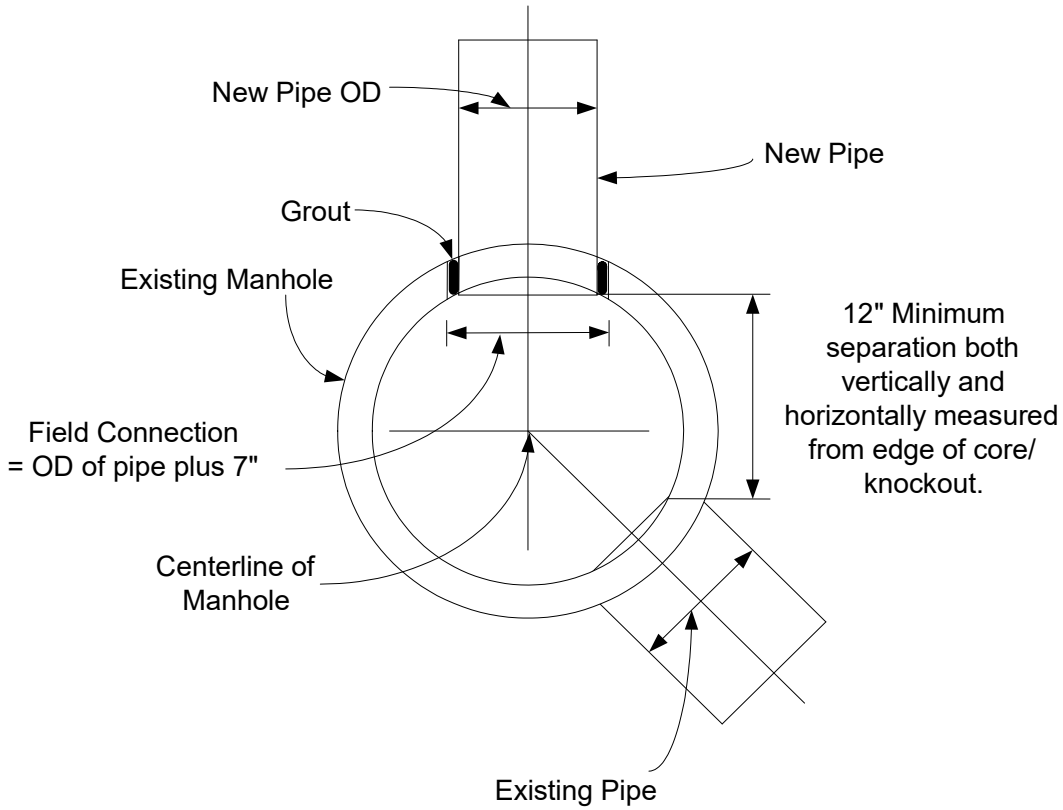

Figure 4.5 New pipe Connection to an Existing Manhole

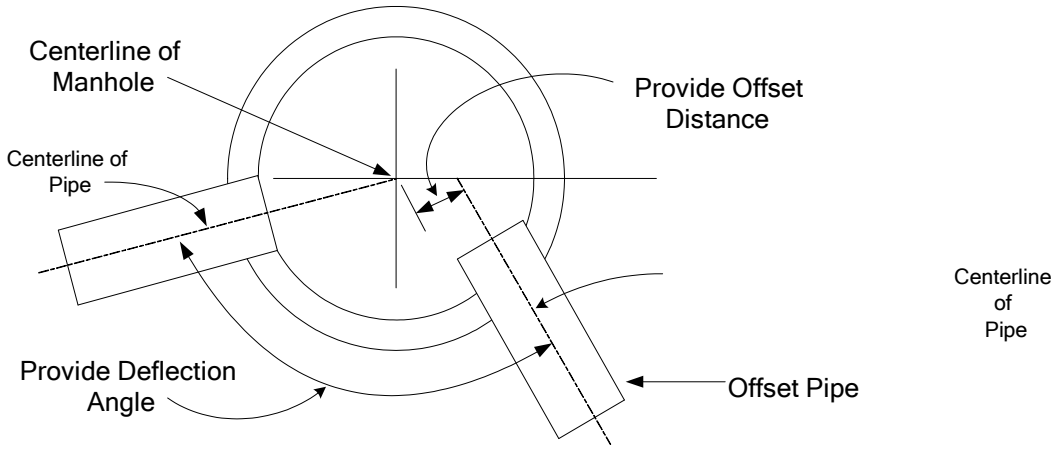

Figure 4.6 Offset Pipe Connections to a Manhole

4.6.6 Inside Manhole Drop Connection

BES will review and approve any manhole designed with an inside drop connection. Designers shall reference the Standard Plans for specific information. Reference the Standard Plan for an Inside Drop only when connecting a 12-inch sewer or smaller pipe to a manhole. The minimum incoming sewer size is 6-inches. Inside drop connections on sewers larger than 12-inches requires special design and BES review.

Apply the following requirements to determine if an inside drop connection can be used.

- The connecting manhole shall be a minimum of 15-feet deep.
- The minimum drop allowed is 3-feet.
- Construct only one inside drop in a standard 48-inch manhole.
- Provide 1-foot of clearance in all directions from the outside wall of the drop structure to all other connections and appurtenances in the manhole.
- The drop structure shall not be in a location that obstructs the flow of any other connection to the manhole or the access or steps.

Drop connections are required when the vertical distance between flow-lines exceeds the distance required by the standards set forth above. Specify the diameter of the drop connection on the plans. The diameter of the drop connection shall not be more than one pipe size smaller than the diameter of the incoming sewer

4.6.7 Pipe Stubouts from Manholes

Provide a pipe stubout from a manhole at any location where a possible future extension could occur or at the end of the sewer line unless otherwise directed by BES. A stubout shall be a maximum of 4 feet long measured from the outside manhole wall. The City requires that a flexible joint be located within 18-inches from the outside manhole wall.

4.6.8 Manhole Channel Design

Flow through a manhole may cause detrimental energy losses. This is an especially important consideration where the sewer design capacity and velocity approach the minimum acceptable limits as well a controlling hydrogen sulfide (Refer to Chapters 5, 6 and 7, Minimum and Maximum Velocity). Energy losses can be especially significant at manholes where alignment changes occur. Designers shall submit calculations to support their design and show how they have compensated for energy losses at any critical location. Give special attention to the channel flow depth of the incoming and outgoing sewers to avoid creating turbulence.

BES has established standards for designing the manhole channel to compensate for normal energy losses. For purposes of slope calculation, these elevations reference the intersection of the incoming and exiting sewer pipe inverts (usually referenced at the center of the manhole). (See Figures 4.7 and 4.8) **Vertical Alignment**

- The crown of all incoming sewers shall be at least as high as the crown of the outgoing sewer.
- When the incoming and outgoing sewers are of equal size and are passing straight through the manhole, no added elevation change is required.

- If sewers intersect or the alignment changes at the manhole, the invert elevation differences shall be 1/10-foot for each 30 degrees of horizontal deflection.
- The manhole channel slope shall be equal to and continuous with the slope of the same sewer outside of the manhole (Refer to Chapter 4, Determining Sewer Slope Between Manhole Structures).
- Sanitary sewers must enter the manhole through a channel in the base. This includes drop connections, connections to existing manholes, and sewer service laterals (service laterals).
- Storm sewers and inlet leads do not need to enter a manhole at its base, but need to be located to avoid the manhole steps. The invert of a storm sewer pipe shall not be greater than 4-feet above the manhole invert. See Standard Plan 406-3 for the location of the invert entering a manhole for a storm inlet lead of 12” pipe or smaller.
- The maximum drop between incoming and outgoing sewer mainline inverts shall be 1-foot. When the drop across the inverts is greater than 1-foot then adjust the inverts to suit the maximum allowed, or design the manhole channel with a ”beaver slide” or with a drop manhole connection if the distance is greater than 3feet.

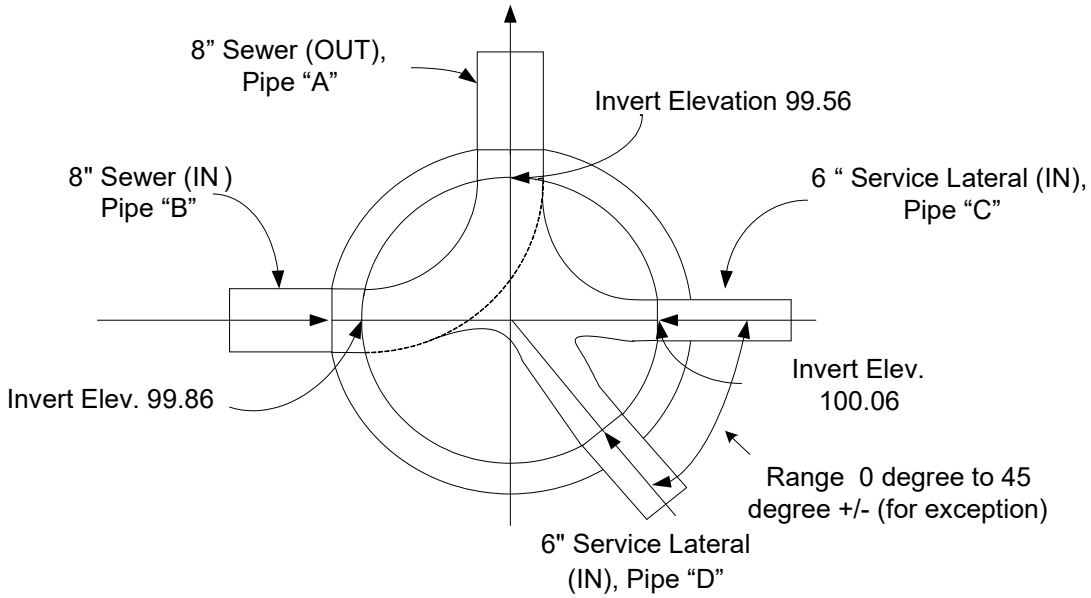

Figure 4.7 Manhole Channel Design Horizontal Alignment

- When incoming and outgoing sewers have the same diameter, the channel width shall be the same as the sewer inside diameter.
- When the diameters of the sewer pipelines are different, uniformly taper the channel width from one pipe to the other to provide a smooth transition.
- For sewers less than 12-inches the minimum radius of the channel centerline shall be 1/2 the diameter of the manhole

- For sewers greater than or equal to 12-inches the minimum radius of the outer channel wall shall be 1/2 the manhole diameter.
- The channel shall have a uniform curve, with no reverse curves within the manhole.
- The top of the bench shall be to the spring line of the incoming and outgoing sewers when the pipes are the same diameter.
- When the incoming and outgoing sewers have different diameters, the top of the bench shall be set at the spring line of the highest pipe within the manhole, except when a “beaver slide” is designed.
- If the hydraulic grade line (HGL) in the manhole is higher than the top of the largest sewer within the manhole, then design the top of the channel 3-inches above the HGL.
- For sewers where the width of the bench is inadequate or the channel width is unsafe for a worker to straddle the open channel, a platform may be required to bridge the channel for safety and for maintenance purposes. Size the platform for easy of removal through the manhole openings.
- When referencing the pipe invert elevations on the profile, the designer must provide the inverts of all pipes entering and exiting the manhole. Design the pipe exiting the manhole to have its invert at the lowest elevation.
- Where feasible, locate a manhole frame and cover outside of traffic wheel lanes.

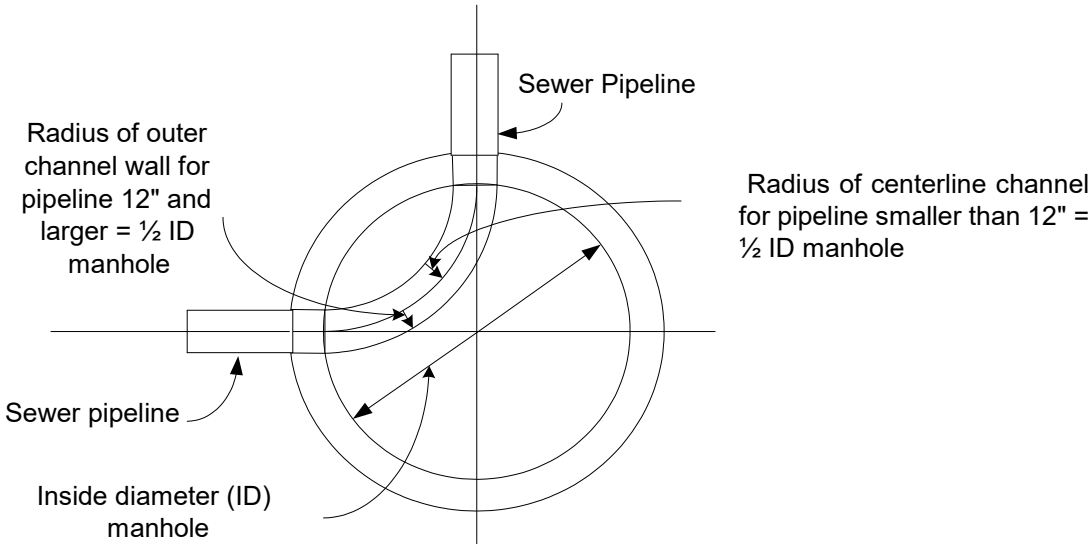

Figure 4.8 Minimum Dimensions of Manhole Channels

4.6.9 Manhole Depth Design

For design purposes, measure the manhole depth from the top of the manhole frame and cover to the invert at the manhole centerline.

The maximum depth for all Standard manholes 48- through 120-inches is thirty feet. Manholes deeper than 30 feet require design by an Oregon licensed structural engineer. BES must review all design submittals and calculations before incorporating these designs into a project.

The minimum manhole depth shall be 4-feet from the top of the channel bench to the top of manhole sections. When this depth is less than 4-feet but not less than 3 feet provide a flat top shallow type manhole. Twelve inches is the maximum pipe size for shallow type manholes.

4.6.10 Diameter of Frames and Covers

The size of the manhole frame and cover is a function of the largest sized pipe that enters or exits a manhole. Unless otherwise indicted on the Plans the required manhole openings shall be as shown in Table 4.10 in accordance with BES Standard Plans.

4.6.11 Setting Elevation of Manhole Frame and Cover

Factors that influence setting the elevation of a manhole frame and cover include its location either inside or outside of a public right-of-way and the anticipated future fill conditions over the manhole.

Table 4.10 Diameter Requirements for Manholes Frames and Covers

MANHOLE TYPE	MANHOLE DIAMETER, INCHES	NOMINAL DIAMETER OF MANHOLE FRAME AND COVER, INCHES	STANDARD PLAN REFERENCE
Precast	48	24	4-20-1 through 4-26
Precast	60	24	
Precast	72	36	
Precast	84	36	
Precast	96	36	
Precast	108 and 120	36	
Brick	48	24	4-20-1 through 4-26
Monolithic	Varies	24	4-15 (Top Slab), 4-20-1 through 4-26

Show the design elevation of each manhole center on the profile. When using the roadway profile to calculate the rim elevation, give the elevation to the 1/100 (0.01) of a foot. When using a roadway profile showing contour lines calculate the rim elevation to the nearest 1/10 (0.1) of a foot.

When the manhole is located outside of an existing right-of-way or in a public sewer easement, design the rim to the existing ground elevation or as directed by BES.

In areas where 2-feet or more of grading is planned, design manholes to match the existing grade. Design the sewer to handle any additional fill.

When planned future grading over the manhole is less than 2-feet, set the rim elevation to match the future grade or as directed by BES.

When the future grading will decrease the cover over the sewer, set the rim elevation to the initial grade. The sewer shall be designed to handle the increased live load resulting from reduce fill over the sewer.

4.6.12 Alternate Manhole Features

The Standard Plans show some alternate manhole features. Where such features are required, a note on the construction drawings must specify their use. Examples include: a watertight manhole frame and cover that is specified if floodwaters are expected to cover the manhole top or if the manhole must be located in the street gutter or subject to surcharge and tamper-proof manhole frames and covers where manholes may be subject to vandalism.

4.7 Cleanouts - When and Where They Can be Used

A cleanout provides another entry point for City personnel to access a sewer for maintenance or inspection purposes; they also assist City staff when locating sewer utilities in a ROW. A cleanout may be used in lieu of a manhole however BES must approve the use of any cleanout. Any cleanout located in a pedestrian way shall have a cover with a non-slip surface. Refer to COP Standard Construction Specification 308.2.07 Utility Access Doors – Slip Resistance for the specific criteria.

There are two cleanout design standards: (1) Lateral Cleanout (Standard Plan 4-41-1) and (2) Terminal Cleanout (Standard Plan 4-41-2). (These two Standard Plans are included in the BES Supplemental Standard Specifications) Each has different application requirements.

Place cleanouts behind the curb within the planting strip or furnishing zone or at the property line on the property side of the sidewalk. Where possible locate a cleanout to avoid conflict with tree roots, driveway aprons, water meters and hydrants, existing or proposed Green Street Facilities or other existing utilities.

4.7.1 Lateral Cleanout

The City may require a cleanout on a sewer lateral when circumstances justify its use. Any of the following circumstances would be justification for the City to require a lateral cleanout within the ROW.

Where the:

- Slope of the lateral is less than the minimum required,
- Maintenance Bureau regularly cleans a problematic lateral,
- Lateral between the service connection and the sewer main is under a major street/highway,
- Sewer main is under a light rail/trolley track,

- Lateral is adjacent to a major utility that limits using a conventional open-cut excavation method.
- Approved wye connection is located in the right-of-way, install a cleanout only on the straight through wye branch.
- Private lateral runs parallel to a curb and the distance to the building sewer connection is less than 100 feet otherwise install a manhole.

A lateral cleanout shall be located in the ROW downstream from the private sewer connection to the public sewer lateral. Typically, place the cleanout in front of or behind the curb in a paved or landscape area. However, under certain circumstances the cleanout could be located behind the sidewalk at the property-line. Surface restoration requirements are project-specific.

4.7.2 Terminal Cleanout

A terminal cleanout occurs at the end of a sewer mainline or a dead-end of a sewer where there is no plan for any future extension or service connection. It is usually located in the ROW of an improved street although this is not a requirement.

An exception occurs on a multi-phased permit project. In this case, the terminal cleanout can serve as a temporary sewer access and termination point for the beginning the next phase of development. When the next phase of development begins, remove the cleanout and begin the new sewer from its location. Never use cleanouts when a manhole is specified or required.

Installation of a terminal cleanout is limited to an 8-inch sewer. The maximum distance from the cleanout to the nearest downstream manhole is limited to 100 feet maximum for grades less than 5% and 150 feet for grades greater than 5%. Whenever conditions exceed these distances or slopes install a manhole.

4.8 Abandonment of Sewers, Manholes, Sumps and Structures

As part of the ongoing process of sewer construction and reconstruction, BES regularly replaces and abandons numerous facilities throughout the sewer system. Factors that influence whether to abandon a facility include development, facility location or replacement of deteriorated facilities and new regulations, etc.

The designer shall determine whether the pipe and associated appurtenances and structures should be abandoned in place, physically removed, or filled with Controlled Low Strength Material (CLSM) or other approved material.

The designer shall clearly indicate the limits, describe the method(s), and show the locations, of abandonment and/or removal of pipelines, structures and appurtenances on the drawings and in the Specifications. Removal of an existing facility frequently occurs when constructing a new facility. It is not necessary to show the abandonment on the plans if a facility is removed as part of the excavation to construct a new facility.

4.8.1 Sewers 12-Inches And Less in Diameter

Abandon sewers in place unless it can be determined that the risk of structural failure is high or removal is necessary to avoid conflict with a new sewer. Before earmarking a sewer for abandonment, clean and remotely inspect the sewer. Determine its structural condition and whether any active service laterals connect to the sewer. If it is determined not to pose a failure risk, the pipe may be abandoned in-place. Permanent plugs of impermeable material (e.g. concrete or Controlled Low Strength Material (CLSM) shall be placed at the upstream and downstream ends of the abandoned sewer. If a sewer presents undo risk of failure, remove or fill the sewer for its entire length with CLSM or sand. Before abandonment, BES must approve abandonment of all pipes.

4.8.2 Sewers Greater Than 12-Inch In Diameter

Abandon sewer in-place or remove the sewer if its location conflicts with a new facility. Accomplish in-place abandonment by filling the sewer with CLSM or sand.

4.8.3 Manholes and Sumps

Abandon manholes and other structures in accordance with City Standard Construction Specifications. Sumps identified for abandonment must follow the decommissioning rules found in ODEQ UIC Rules and the Decommissioning Plan as required by the City's WPCF permit from ODEQ. Refer to Chapter 1, Companion Documents and Internet Links.

If a designer determines that a structure contains items for removal such as pipe, fittings, valves, operators and other appurtenances, indicate which items to salvage on the drawings. BES must review and advise the designer which of these items to salvage. Coordinate delivery of the salvaged items to BES or BOM for storage.

4.9 Buoyancy of Sewers

Constructing a sewer in an area subject to inundation increases the possibility of pipe and manhole flotation. Situations and locations where this condition can occur are found at stream crossings, Water Quality Pollution Reduction Facilities, in flood plains and in areas subject to high ground water. When such conditions exist, evaluate the possibility of pipe floatation and if necessary modify the pipe design to counteract this condition.

The buoyancy of a pipe depends upon several factors:

- The weight of the pipe,
- The weight of the volume of water displaced by the pipe,
- The weight of the liquid load carried in the pipe, and,
- The weight of the backfill

As a conservative practice, BES recommends that a pipe be considered empty for two reasons 1) so the weight of the liquid load will be considered an additional safety factor and 2) the possibility of the pipe not being in use at all times.

The first step is to determine if a pipeline will float with no backfill material. The sum of the pipe weight and the weight of displaced water will determine if the conditions exist to cause floatation.

Select the pipe material and determine the weight per lineal foot (W_{pipe}) including the bell joint and appurtenances. This information is obtained from published product data.

Unless otherwise specified by the City, the designer should calculate ASTM C76 pipe weight using Wall C and ASTM C14 pipe weight using Class 3 specifications. ASTM D3034 and D3035 define dimension ratios for various classes of thermoplastic pipe having different wall thickness. Refer to manufacturer's published data for specific material and pipe weight.

The approximate weight of any pipe can be calculated using the following formula.

$$W_{pipe} = \frac{\pi}{4}\left(B_C^2 - D^2\right) \text{x Unit Weight of Pipe Material}$$

Where: W_{pipe} = Weight of pipe per lineal foot, lbs

B_c = Outside pipe diameter, feet

D = Inside pipe diameter, feet

Equation 4.9 Pipe Weight per Linear Foot

When a pipe immersed in the fluid displaces water, a buoyant or upward force is created; if the buoyant force is greater than the weight of the pipe displaced water floatation will occur. The force of displaced fresh water per linear foot of circular pipe is calculated using the following equation:

$$W_{water} = \frac{\pi}{4} B_{C2} \text{ x } \gamma_{water}$$

Where: W_{water} = weight of displaced water, lbs/linft

B_c = outside diameter of pipe, feet

γ_{water} = Unit weight of fresh water, 62.4 lbs/cuft

Equation 4.10 Buoyancy Force of Displaced Water

If clean water is displaced use a unit weight equal to γ_{water} = 62.4 pounds per cubic foot (lbs/cuft). If other constituents mix with the water, its unit weight could change from this value. Local conditions should be investigated for specific projects.

Sum the weights of the pipe (W_{pipe}) and displaced water (W_{water}) to determine if the weight of the pipe is adequate to prevent floatation.

$$\sum W_{p+w} = W_{pipe} + W_{water}$$

Where: W_{water} = weight of displaced water, lbs/linft
W_{pipe} = weight of pipe, lbs/linft
©W_{p+w} = Resultant summation of forces

Equation 4.11 Summation of Forces

If the resultant force is positive, the pipe will not float. If the resultant force is negative, the designer must determine the weight of backfill directly over the pipe necessary to prevent floatation.

To complete evaluation on the affect that backfill plays on preventing pipe floatation it is first necessary to define the factors that will require evaluation. Figure 4.9 defines the general conditions for evaluating a pipe for buoyancy.

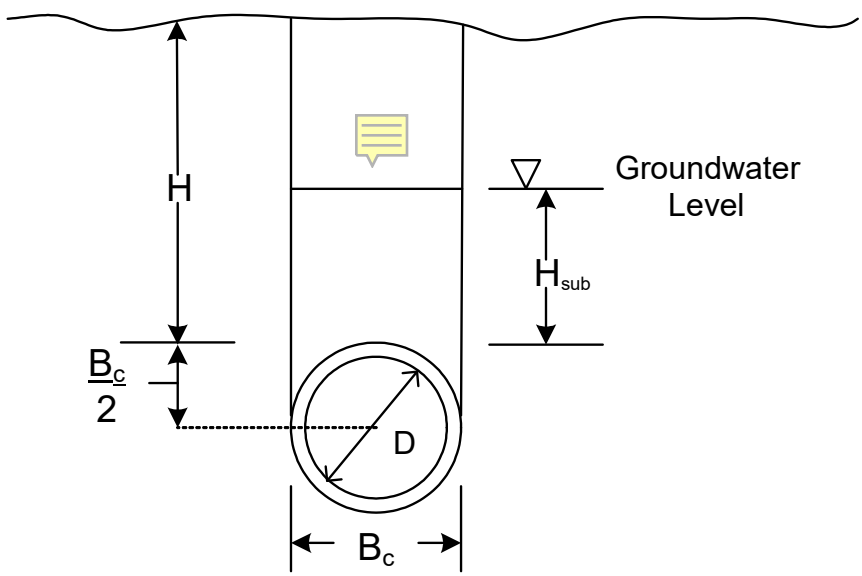

Figure 4.9 Definition Sketch for Evaluating Buried Pipe Buoyancy Conditions

Where: H = depth from top of pipe to finished surface, feet
H_{sub} = Depth of backfill below groundwater and above pipe, feet
B_c = Outside diameter of pipe, feet
D = Nominal pipe diameter, feet

The weight of the backfill directly over the pipe assists resisting buoyant force. The unit weight of compacted backfill material varies with material, grain size, degree of compaction and the depth of submergence. For computations, use the average values for specific gravity and unit weight of backfill material provide sufficient accuracy.

The weight of backfill above a pipe including the area below the top of pipe and above the exterior pipe walls above the springline can be calculated using the following general relationship

$$W_{dry} = \gamma_{dry}\left(0.1073\ B_{c2} + \left(H - H_{sub}\right)B_C\right)$$

Where:

W_{dryy} = weight of backfill above the water level, pounds per linear foot γ_{dry} = average dry unit weight backfill, lbs/cuft
H_{sub} = depth of submerged backfill above top of pipe, feet H = depth from top of pipe to surface, feet
B_c = nominal outside pipe diameter, feet

Equation 4.12 Weight of Dry Backfill above Pipe

The unit weight of submerged backfill is equal to the dry density of the backfill minus the weight of water displaced by the solid soil particles. It can be calculated using the following relationship:

$$\gamma_{sub} = \left(\frac{SG - 1}{SG}\right) \times \gamma_{dry}$$

Where: γ_{sub} = average unit weight of submerged backfill, lbs/cuft
γ_{dry} = average unit weight of dry backfill, lbs/cuft SG = specific gravity of backfill, assume 2.65.

Equation 4.13 Unit Weight of Submerged Backfill

Using the value for SG will provide sufficient accuracy. Under these conditions the relationship simplifies to γ_{sub} = 5/8 γ_{dry}. Certain conditions may require soil investigation to determine the actual soil conditions; the designer will be responsible for determining actual soil conditions.

The weight of submerged backfill above the pipe including the shaded area below the top of pipe and above the exterior pipe walls above the springline can be calculated by:

$$W_{subt} = \gamma_{sub}\left(0.1073\ B_{c2} + H_{sub}\ B_c\right)$$

Where:

W_s = weight of saturated backfill directly above pipe, lbs
Y_{sub} = average unit weight of saturated backfill, lbs/cuft B_c
= nominal outside pipe diameter, feet
H_{sub} = depth of submerged backfill above top of pipe, feet

Equation 4.14 Weight of Submerged Backfill above Pipe

Therefore, the total weight of backfill acting downward on the pipe is determined from the sum of W_{dry} and W_{sub}

$$\sum W_{S+D} = W_{dry} + W_{sub}$$

Where:

W_{dry} = weight of dry backfill directly above the pipe, lbs/cuft
W_{sub} = weight of submerged backfill above the pipe, lbs/cuft
©W_{S+D} = Resultant summation of forces, lbs

Equation 4.15 Total Weight of Dry and Submerged Backfill

Lacking detailed knowledge of the backfill material and local groundwater conditions the designer shall apply a factor of safety to decrease the downward force of backfill acting downward on the pipe. Use a factor of safety of 1.5 unless detailed site knowledge dictates use of another value. The total weight of backfill above the pipe with a Factor of Safety is calculated using the following relationship.

$$W_{FS} = \frac{\sum W_{S+D}}{FS}$$

Where:
W_{FS} = Total weight acting downward on the pipe with a FS
©W_{S+D} = Resultant summation of forces
FS = Factor of Safety, use 1.5

Equation 4.16 Total Weight of Dry and Submerged Backfill with a Factor of Safety

After determining, both the upward force due to displacement of water and the downward force from the backfill material, determine the resultant force acting on the pipe. If the resultant force is positive, the pipe will not float. If the resultant force is negative, the designer will have to select and analyze procedures required to prevent floatation.

Procedures to prevent floatation when the weight of pipe and backfill is not adequate include the following:

a) Increase or change the pipe to a heavier pipe material

b) Design concrete collars on the pipe. When computing the needed volume of concrete per linear foot of pipe anchorage, use the submerged weight of

concrete of 87.6 pounds per foot to calculate the needed weight to overcome the buoyant force.

To determine the minimum height of inundated backfill necessary to prevent floatation during construction use the following relationships to calculate the force exerted by the inundated backfill on the pipe to overcome the buoyant force acting upward on the pipe.

$$\left(0.1073\, B_2\right.$$

$$_{sub} = \gamma_{sub} \qquad FS \qquad {}_{\text{sub min}} = \quad w_{\text{sub}} B_c \quad - \qquad {}_c$$

Where:

W_{sub} = Resultant summation of forces FS = Factor of Safety, use 1.5

γ_{sub} = average submerged unit weight of backfill, lbs/cuft H_{sub} = depth of submerged backfill above top of pipe, feet

H_{submin} = minimum depth of submerged backfill above pipe, feet

B_c = nominal outside pipe diameter, feet

$$W \qquad {}_c + H_{sub} B_c \Big) \qquad \& \qquad H \qquad FS \sum W_{sub} \quad 0.1073\ B$$

Equation 4.17 Minimum Depth of Cover

When pipes are buried in soil under water, the suggested height of soil cover above the pipe to prevent floatation of an empty pipe is about H – (D/2). Because a factor of safety is advisable, the minimum cover requirement is often H = D.

Example 4.4 Pipe Buoyancy Calculations

Given: A 24-inch diameter sewer crosses a stream with only 2 feet of cover.

Required: Will the empty pipe float in the fully backfilled condition?

Select the pipe material and determine W_p, weight of the pipe.

30-inch RCP, B_c = 38.5 inches (3.21 feet), Wall C weight per linear foot = 477 pounds/linear foot

Determine the weight of water displaced by the pipe.

$$W_w = \frac{\pi}{4}\left(3.21^2\right) x\ 62.4 = 504 \text{ lbs.}$$

Summation of Forces

$$\sum W_{P+W} = 477 + -(504) = -27 \text{ lbs.}$$

There is a net upward force on the pipe, therefore, the pipe could float without backfill directly over the pipe.

Determine weight of inundated backfill

$$W_{sub} = \left(\frac{5}{8} x135\right) 0.1073(3.21)\left(^2 + (2 \text{ x } 3.21)\right) = 635 \text{ lbs}$$

Determine weight of backfill above ground water level

$$W_{dry} = 135\ 2\left(-2\ 3.21\right) = 0$$

Determine total weight of the backfill

$$\sum W_{D+S} = 0 + 635 = 635 \text{ lbs}$$

Apply Factor of Safety to Total weight

$$W_{FS} = \frac{635}{1.5} = 423 \text{lbs}$$

Sum all forces to determine resultant force

$$\sum W = -27 + 423 = 396 \text{ lbs}$$ Therefore the pipe will not float.

4.10 Constructing Sewers on Steep Slopes

The City defines a steep slope as any inclined surface with a longitudinal or cross slope grade of 10% or greater. Steeply sloped soil has a greater potential for downhill movement. A sewer located on a steep slope requires special design considerations and methods to prevent joint displacement and misalignment. Construction on steep slopes can increase surface erosion and the potential for trench washout.

BES has developed construction techniques to counteract these effects when constructing sewers on steep slopes. Examples of these include the use of restrained joint fittings and sewer trench-under-drains. Anchor walls may also be used when pipe is installed shallower than 4', or is within an identified soil creep zone.

BES limits the use of certain pipe materials on steep slopes due to their inherent nature to fail under the conditions that can occur on steep slopes. Concrete pipe is one such material.

4.10.1 Concrete Anchors for Pipe 12-inches Diameter and Smaller and Shallow Burial (less than 4'deep)

Provide concrete anchors according to the Standard Plans and the anchor spacing criteria in Table 4.11. Lay pipe with bells facing upgrade and with anchors cast around the pipe directly behind the bell on the downgrade side.

Table 4.11 Concrete Anchor Spacing for Sewers 12-inches in Diameter and less and Shallow Burial (<4' deep)

GRADE, PERCENT	CONCRETE ANCHOR SPACING
Less than 10%	Anchors not required
10% to 35%	Alternate lengths of pipe (40 feet maximum)
Greater than 36% to 50%	24 feet maximum
Greater than 50%	16 feet maximum

4.10.2 Concrete Anchors for Pipe Greater Than 12-inch Diameter and Shallow Burial (less than 4'deep)

For pipe greater than 12-inches special design is required. The designer shall consult with BES for the design criteria and subsequently submit details and calculations to BES for approval.

4.11 Corrosion and Odor Control Design Considerations

Wastewater is known to the public for its potential to create odor nuisance. Complaints are often caused when odors escape from sewer manholes or other appurtenances; more commonly, the odor source is a wastewater treatment facility. Yet, there are wastewater

treatment facilities that are free from this stigma, and techniques to prevent odor nuisance are available.

A major cause of odors in a sewer system is hydrogen sulfide (H_2S), a gas detectable in very low concentrations. H_2S is also notable for its toxicity and its ability to corrode various materials used in sewer and treatment plant construction.

Traditional sanitary sewer design practice has not fully acknowledged the importance of corrosion and odor control, as evidenced by the widespread occurrence of sulfide and odor control problems throughout the United States for sanitary sewers serving both small and large tributary areas. The 1984 EPA Needs Survey estimates the backlog cost of major sewer rehabilitation to be $3.2 billion. This cost is in addition to the costs for correcting infiltration/inflow problems and is for major structural repair or replacement of sanitary sewers, a significant part of which may be attributed to sulfide-induced deterioration.

Significant developments have evolved for the control of odors and corrosion in wastewater collection systems and treatment plants; in particular, use of chemicals for odor and corrosion control has increased substantially.

4.11.1 Design Approach

The need exists for a comprehensive design approach that brings together available information in a form convenient for those designing new systems or applying odor and corrosion control procedures in existing systems.

While sulfide control is now a well-developed technology, continuing advances in basic knowledge and in control procedures are to be expected. Application of the art in its present state can overcome sulfide-producing tendencies in existing systems and help minimize future problems.

Appendix K, which contains a document titled “Designing to Avoid Odor and Corrosion in New Wastewater Collection Systems”, presents a full discussion on a design approach in dealing with H_2S generated odors. It is the City of Portland’s expectation that all new and rehabilitation sewer designs generated by staff and consultants include considerations for odors and corrosion.

4.12 Sewer System Repairs

As the owner and operator of the City municipal sewer system BES has overall responsibility for approving the location, design, construction and repair of all public sewer assets in the right-of-way including sewer service laterals. This authority requires that BES establish standards and methods to guide the repair of these assets to assure their operation and performance. This responsibility differs from maintenance responsibility for specific sewer assets in the sewer system (i.e. sewer service laterals). Refer to Section 5.5.6 for information about the limits and responsibility for maintaining sewer laterals.

The following criteria apply to any planned repair work to sewer laterals within the right-of-way.

- Spot repairs will not be approved on any portion of a sewer lateral located in a right-of-way. Replace the entire portion of the lateral for which an entity has maintenance responsibility.
- Any repair or connection to a new system within the public right-of-way (property line to curb) will require that the repaired or replacement pipe be of the same material as the downstream pipe.

Chapter 4 – Noteworthy Items

§ BES lists a number of standard rigid and flexible pipe materials that can be used for gravity sewer applications. BES will review any request for use of an alternate pipe material when requested by a designer.

§ All public sewers will be joined using push-on or mechanical joints and fittings. Only HDPE pipe allows both fusion welding and push-on or mechanical coupling systems to join pipe together. HDPE fittings shall be made with HDPE or steel that is pressure rated and compatible with the pipe. § All listed standard pipe materials are specified for use to a maximum depth of cover. For depths greater than those specified, designers will need to modify the installation methods or specify stronger pipe material to address specific design conditions.

§ PVC and HDPE are suitable for installation up to 18 feet above the pipe invert. § BES does not allow curved sewer pipe that rely on "pulled" joints or longitudinal pipe bending. Instead the use of a single blind bend is recommended between manholes. § Construct all sewers with straight, continuous horizontal and vertical alignment between manholes or structures.

§ BES has established minimum depth and vertical separation distances to achieve gravity service to platted properties and to avoid conflict with other utilities. Separation between a sewer and water pipeline follows DEQ and OHD standards. § Use a Manning's roughness factor of 0.013 when designing a combined sewer regardless of material type.

§ Pipe slope is calculated as the difference in elevation between the center invert elevations of adjacent manholes divided by the center-to-center distance between manholes.

§ When performing pipeline strength analysis use a dry unit weight of soil as being 135 lbs/ft^3.

§ Manholes are constructed to provide access to service and safely maintain sewers. BES lists specific criteria to follow when designing and locating manholes throughout the sewer system. The distance between manholes shall not exceed 500 feet without BES approval.

Chapter 5 – SANITARY SEWER DESIGN

Summary of Chapter 5

This chapter provides information when designing public sanitary sewers. Private sanitary sewers need to be designed according to the State Specialty Plumbing Code. Topics include a description of a sanitary sewer's primary functions, flow allocations, estimating design flow using population and zoning data, contingency and peak factors, pipe slope and size as well as the design of service laterals and deep riser connections. This chapter is organized into the following sections:

Introduction
Estimating Sanitary Sewer Design Flows
Calculating Design Flows
Design Criteria
Sewer Service Laterals
Deep Riser Connections
City Maintenance

5.1 Introduction

Public sanitary sewers perform two primary functions:

- Safely carry the design peak discharge,
- Transport suspended materials to prevent deposition in the sewer.

It is essential that a sanitary sewer has adequate capacity for the peak flow and that it functions at minimum flows without causing operational problems.

Design all sanitary sewers as a separated system. The Chief Engineer, BES must approve any exception to this standard. A sanitary sewer shall carry all expected flow from its drainage area for the entire design period.

Wastewater can originate from four primary sources: 1) domestic, 2) commercial, 3) industrial development and 4) extraneous inputs. Extraneous flow such as infiltration and inflow (I/I) enters a sewer through system defects and illicit connections. The City provides unit flow rate design criteria for all of these constituents when designing a sewer. The City prohibits the connection of roof, yard, and foundation/footing drain connections to any sanitary sewer.

All sanitary sewer design shall follow these adopted standards. BES must approve any departure from these standards. These procedures, though tailored for manual calculation methods, can also be adapted for use with a computer model.

5.2 Criteria for Estimating Design Flows

BES has established flow criteria for residential, commercial, industrial and extraneous flow contributions. These criteria rely on historic and empirical information that provide a

sound basis for design. Whenever possible, a designer should employ flow monitoring and measurement to verify these parameters to predict future flows for all development types.

Flow in a sanitary sewer varies continuously throughout the day with the minimum flow typically in early morning hours and peak flow occurring during the daylight hours. I/I remain reasonably constant except during and following periods of rainfall. Because system records are rarely complete enough to characterize the minimum and peak flow rates, the City relies on a generalized peaking factor to relate average flow to peak flow.

BES has defined wastewater flow rates from four primary sources. Three are land use categories (e.g. residential, commercial, and industrial development) and the fourth is for extraneous flow (I/I).

The minimum, average and peak daily flow rates are the primary criteria for establishing a sanitary sewer size and slope. Determining flow rate is largely a function of the drainage basin area size, its population, current and potential land use, and the unit flow rate assigned to each land use.

Minimum flow relates directly to the design of sanitary sewers to insure proper transport of solids and sediment. Identifying where in a system the minimum flow occurs is useful to determine where potential solid deposition occurs. The average daily flow is useful to estimate peak flow. At the end of a design period, the peak flow defines the needed hydraulic sewer capacity.

The following paragraphs summarize the key criteria necessary to design a sanitary sewer.

5.2.1 Drainage Basin

A drainage basin is the entire area contributing flow to a sewer; each basin has unique characteristics. This area may be defined by natural topography, natural or man-made barriers, political, or economic factors or development patterns. Assess any potential area, such as an unsewered area, for possible inclusion into this area.

Review as-built records and plumbing records to help define the basin boundary. Sewer maps and drainage maps with contours are helpful in defining the full extent of this area.

5.2.2 Population

BES uses City per capita Occupancy Rates for Calculating Sanitary Sewer Design Population

Single Family - 2.6 occupants
Multi-family - 2.2

Population estimates are used to calculate the average flow for residential development. The total population is determined from the number of occupants living in each single and multi-family dwelling unit.

A single-family residence is assumed to have 2.6

occupants and multi-family residence 2.2 occupants.

5.2.3 Land Use

Land use defines the development potential of land, its subsequent population density and the types of wastewater contributors that could reside in an area. It is necessary to consider service to current development as well as to the ultimate planned development allowed by zoning.

Reference the future zoning adopted in the Comprehensive Plan unless strong evidence indicates approval of significantly different flow-producing zoning/land uses. Title 33 of the Planning Code establishes the maximum allowed building density and site coverage for each zone type. Reference to the current Comprehensive and Zoning document (City Code Title 33 Planning Code) is available through the Planning Bureau website http://www.portlandonline.com/planning/.

Sanitary flow is a function of the development type and the occupant operating characteristics. Table 5.1 lists all of the zoning classification identified in the City's Comprehensive Plan with their designated Title 33 Map Zoning Symbol. Only in the case of single and multi-family residential zoning are the dwelling units per acre allowed under the Plan noted; use this information to calculate the population size that will generate wastewater flows for these zones. Determine wastewater flow from all nonresidential land use using the available developable acreage.

Table 5.1 City of Portland Zone Classification and Residential Housing Density

Zone Map Symbol	Full Name	Dwelling Units per Net Acre	Zone Map Symbol	Full Name
Single Residential			**Low Density Commercial**	
RF	Residential Farm/Forest	0.5	CN1	Neighborhood Commercial 1
R20	Residential 20000	2.2	CN2	Neighborhood Commercial 2
R10	Residential 10000	4.4	C01	Office Commercial 1
R7	Residential 7500	6.2	CO2	Office Commercial 2
R5	Residential 5000	8.7	CM	Mixed Commercial/Residential
R2.5	Residential 2500	17.4	CS	Storefront Commercial
Multi-family Residential			**High Density Commercial**	
R3	Residential 3000	21	CG	General Commercial
R2	Residential 2000	32	CX	Central Commercial
R1	Residential 1000	65	**Employment & Industrial**	
RH	High Density Residential	125	EG1	General Employment 1
RX	Downtown Residential	150	EG2	General Employment 2
IR	Institutional Residential	Variable	EX	Central Employment
Open Space				

			IG1	General Industrial 1
OS	Open Space		IG2	General Industrial 2
			IH	Heavy Industrial

Table Reference: Title 33 Portland Planning Code.

5.2.4 Net Developable Area

The drainage basin defines the total land available for development and sanitary flow production. BES uses the net developable acreage (i.e. net acres) within a basin to design sanitary sewers. To calculate the net acreage for existing development, subtract all non-developable area from the existing development total area.

$$\text{Net Developable Area} = \text{Total Area} - \text{Non} - \text{developable Area}$$

Equation 5.1 Net Developable Land Calculation

Some examples of non-developable land that qualify for exclusion include street right-ofway, a dedicated park or a cemetery. Any area excluded from the total area must not be available for development at any time in the future.

For completely undeveloped land, determine the net acreage by multiplying the total area by a factor of 0.85 to compensate for future street dedications.

5.2.5 Unit Wastewater Flow Rates Residential **(Map Symbol R_)**

To calculate the average daily flow rates for single and multi-family development types, multiply the estimated total population by 80 gallons per capita per day (gpcd). This value represents an average daily flow rate therefore multiply this average flow by a peak factor.

Commercial (Map Symbol C_)

To calculate the average daily flow rates for commercial development, multiply the net commercial development acreage by a unit flow rate per net developable acre. This value represents an average daily flow rate therefore multiply this average flow by a peak factor.

Low Density Commercial development assumes average flow of 1,000 gallons per net acre per day (gpad) while **High-Density Commercial** development assumes average flow of 3,000 gpad. The designer shall investigate commercial development that could contribute significantly greater flow, such as, car wash, laundry, etc. Because this flow rate is an average flow rate, multiply this value by a peaking factor.

Open Space (Map Symbol OS)

For open space, multiply the net open space acreage (if applicable) by a unit flow rate per net developable acre. Assign open space an average daily flow rate of 750 gallons per net acre. This value represents an average daily flow rate therefore multiply this average flow by a peaking factor.

The wastewater generating characteristics of public open space is a function of the character of the open space, the types of facilities within its boundary, and the activities

occurring at a facility. Wastewater flow depends on the availability and number of facilities that support these activities. For example, Civic Stadium, a designated open space in the Comprehensive Plan, has significantly different wastewater generating characteristics when used for public events than the attendance at Test Rose Garden during the annual Rose Festival.

Employment and Industrial (Map Symbol E_ & I_)

To determine the design flow for industrial land multiply the net industrial development acreage by a unit flow per net developable acre. All industrial land assumes a flow rate of 5,000 gpad. For only this zone class, this flow rate is the peak flow rate; therefore, **do NOT** multiply this value by a peaking factor.

Industrial flow can vary significantly depending on the industry type, size, operational phase and whether it has an on-site sanitary treatment facility. Peak flow can also vary greatly depending on the shifts of operation but once a shift begins, flows can remain constant. The designer shall conduct a survey to determine if a significant number of industries are located within an area. BES's Pollution Prevention Group maintains a list of industries within the City. Pollution Prevention Group staff can aid in determining industrial flow contributions.

Treat wastewater flow from institutional facilities such as a hospital, government facility or a school as a commercial or industrial use or estimate flow using published studies. Because similar institutions are often similar in terms of their wastewater flow characteristics, this may allow extrapolation of estimates for existing or proposed institutional facilities. Records may also be available for these land use types.

Extraneous Flow from Inflow & Infiltration (I/I)

The sewer capacity shall include an allowance for extraneous flow. Extraneous flow includes I/I entering a sewer through defective pipes, leaking joints, manholes, illegal connections and cross connections.

I/I flow results from multiplying the net acres of each land use class by a unit flow rate per net developable land. I/I assumes a rate of 1,000 gpad for all zone classifications. Open space is exempt from this requirement. Sanitary sewer design does **NOT** require multiplication of this average flow by a peaking factor.

5.2.6 Contingency Factor for Unanticipated Land Use Changes

Changing land uses within a drainage basin pose an unknown design factor affecting sewer design. Population and land use estimates for planning purposes has a shorter projection period than what is required for a sewer design. BES recognizes this inherent uncertainty resulting from changing land use and the effect they can have on sewer flow rates. Therefore, BES multiplies all of the calculated flow allocations for domestic, commercial, employment & industrial, and open space with a contingency factor of 1.25 to account for these unforeseen and unanticipated changes.

5.3 Calculating Design Flows

Equations 5.2 through 5.4 are for calculating the average daily flow rates for the Residential, Commercial and Open Space zone classes defined in Table 5.1.

$$\frac{DU}{Netacre} \times \frac{Resident}{DU} \times \frac{UnitFlow}{Resident} \times Contingency\ Factor$$

Equation 5.2 Average Residential flow per net acre

$$\frac{Commercial\ Unit\ Flow}{Netacre} \times Contingency\ Factor$$

Equation 5.3 Average Commercial flow per net acre

$$\frac{Open\ Space\ Unit\ Flow}{Net\ acre} \times Contingency\ Factor$$

Equation 5.4 Average Open Space flow per net acre

Use Equation 5.5 to calculate the peak daily flow rate for Employment and Industrial land use.

$$\frac{Industrial\ Peak\ Unit\ Flow}{Net\ acre} \times Contingency\ Factor$$

Equation 5.5 Peak Industrial flow per net acre

This flow rate is a peak design flow for this zone type and therefore does NOT require a peak factor.

BES has computed the daily flow values per net acre for each identified zoning class. Table 5.2 presents a summary of these data and assumptions. The tabulated unit flow values presented in columns 4, 5 and 6 include a contingency factor.

5.3.1 Peak Factor

A designer must consider the range of flow in a sewer over its design period. Normally, the average flow is calculated and then a peak factor (PF) is determined. Multiplying the average flow with this PF yields the peaking daily flow (PDF). The PDF determines the ultimate sewer capacity and the needed pipe size and slope. Over the design period, the ratio of average to peak flow may change significantly depending on development within an area and other contributing factors.

BES has adopted an established relationship relating an average flow rate to a peak factor and a corresponding peak flow rate when designing a sanitary sewer. The following equations define the relationships between the average and peak flows and peaking factor.

$$PF = 2.65\left(Q_{ADF}\right)_{-0.0982}$$

Equation 5.6 Peak Factor (PF) as a function of the Average Daily Flow (Q_{ADF})

$$PDF = 2.65(Q_{ADF})_{0.9018}$$

Equation 5.7 Peak Daily Flow (PDF) as a function of the Average Daily Flow (QADF)

Figure 5.1 shows the graphical relationships that relate these variables to each other.

The following paragraphs describe how to use the average daily flow to determine a PF or a corresponding PDF from Figure 5.1.

Peaking Factor (PF): Locate the average flow on the horizontal axis and project a line vertically upward until intersecting the "Factor" curve. Extend the intersection point horizontally to the left and read the factor on the y-axis.

Peak Daily Flow (PDF): Locate the average flow value on the horizontal axis and project a line vertically upward until it intersects with the "Flow" curve. Extend the intersection point horizontally to the right and read the flow value on the y-axis.

Peak Design Flow (PDF)

To calculate the peak design flow for residential and commercial zones, use Equation 5.8. For a zoned Open Space area delete the I & I allocation. Use Equation 5.9 for industrial zones.

Table 5.2 Sanitary Sewer Design Flows

1		2	3	4	5	6
Zone Type		**City Zone**	**Dwelling Units per Net Acre**	**Average Flow (cfs) [1]**	**Average Flow (cfs) per net acre) [1]**	**Peak Flow (cfs per net acre) [1]**
Residential	Single Family	RF R20 R10 R7 R5 R2.5	0.5 2.2 4.4 6.2 8.7 17.4	0.0002 0.0009 0.0018 0.0025 0.0035 0.0070		
	Multi-Family	R3 R2 R1 RH RX IR	21 32 65 125 150 [2]	0.0071 0.0109 0.0221 0.0426 0.0511 Variable		
Open Space		OS			0.0015	
Commercial	Low Density	CN2 CO1 CM CS			0.0029 0.0029 0.0029 0.0029	

	High Density	CG CX			0.0058 0.0058	
Employment & Industrial		EG1 EG2 EX IG1 IG2 IH				0.0097 0.0097 0.0097 0.0097 0.0097 0.0097

[1] Flow values in columns 4, 5 and 6 include a contingency factor.

[2] This Zone has variable allowable building densities. Consult with Planning Bureau for allowable densities.

The flow values presented in this Table are computed using the following assumptions and criteria presented in this chapter.

Residential

Domestic per capita flow 80 gallons per capita day (gpcd)

Occupants and flow (cfs) per dwelling unit

Single family 2.6 Occupants per dwelling unit

Multi-family 2.2 Occupants per dwelling unit

Peaking Factor (PF) Refer to Figure 5.1

Commercial

Average flow per net developable acre

Low density 1,500 gallons per net acre per day (gpad)

High-density 3,000 gallons per net acre per day (gpad)

Peaking Factor (PF) Refer to Figure 5.1

Industrial

Peak flow per net developable acre 5,000 gallons per net acre per day (gpad)

Contingency and I& I Allowance **These apply to all zone classifications**

Contingency 25%

Infiltration & Inflow (I&I) 1000 gallons per net acre per day (gpad)

$$\text{Net Acres} \times \left(\left(\text{Average Flow} \times \text{PF}\right) + \text{I\&I Unit Flow Rate}\right)$$

Equation 5.8 PDF for Residential, Commercial and Open Space Zones

$$\text{Net Acres} \times \left(\text{Peak Flow Rate} + \text{I\&I Unit Flow Rate}\right)$$

Equation 5.9 PDF for Employment and Industrial Zones

Example 5.1 Using Figure 5.1 to Compute PDF and PF

Given: A local sewer with an average flow of 2.5 cfs is to discharge into an interceptor where the average flow is 5.4 cfs.

Required: Determine the peak daily flow in the interceptor sewer below the confluence junction. Use Figure 5.1 to determine the Peak Daily Flow and the corresponding Peaking Factor.

The combined total daily average flow in the interceptor after flows join is (2.5 + 5.4) cfs = 7.9 cfs. Reference Figure 5.1 (or apply equations 5.6 and 5.7) to convert the ADF in the interceptor below the confluence to a PDF of 17.1 cfs having a PF of 2.1.

Figure 5.1 Graphical Solutions of Equations 5.6 and 5.7

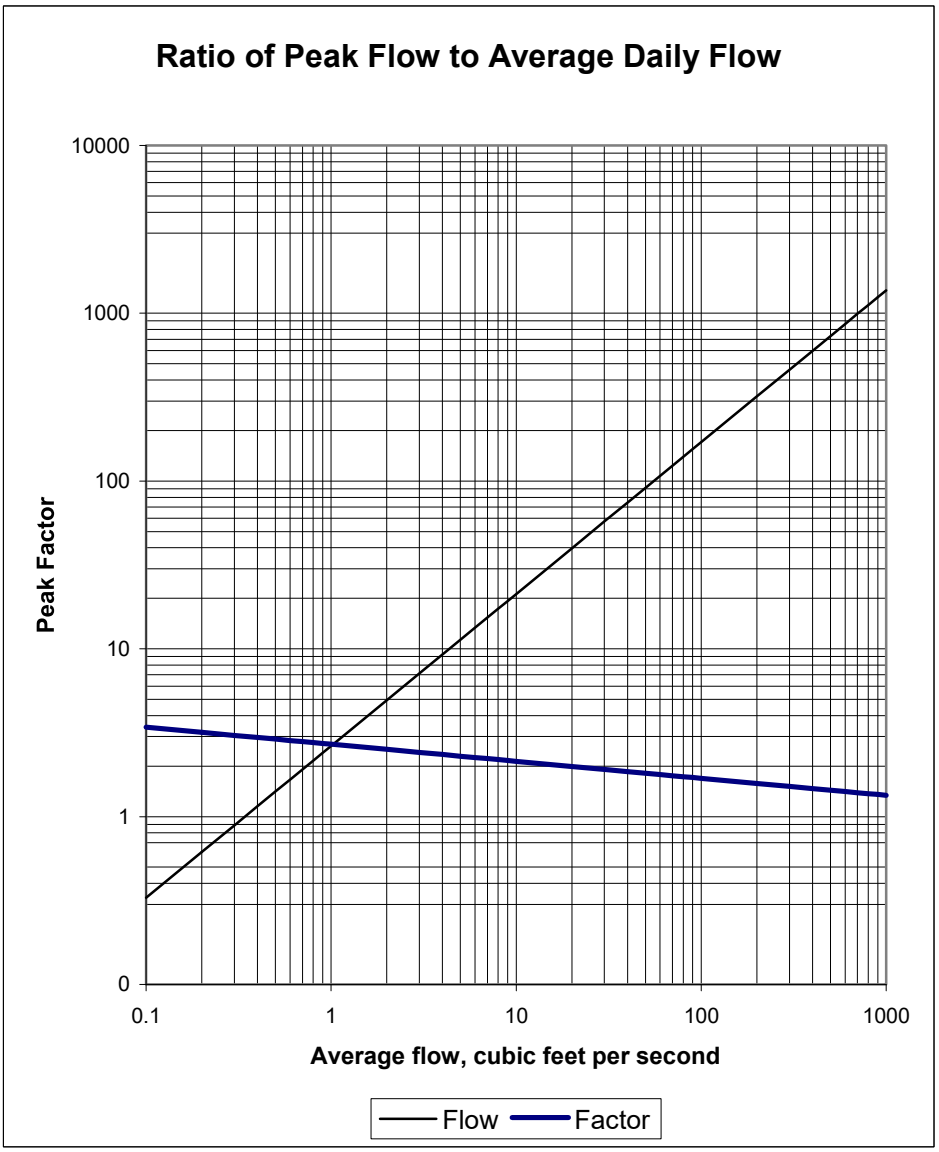

Ref: Gravity Sanitary Sewer Design and Construction Manuals and Report on Engineering Practice No. – 60 (1982)

The following example highlights the process of applying all of these methods to determine the design flows for a theoretical development.

Example 5.2: Applying the Methods to Calculate Design Flows

Given: A 100-acre drainage basin containing 60 net acres of existing residential development (R4) and an undeveloped 40-acre parcel zoned light–commercial (CN1).

Required: Determine the design flows for a sewer serving this area.

Compute the average daily flow (ADF) for each land use

Residential Zone

$$\left(60\,\text{NetAcres} \times \text{NetAcre} \times \frac{4.4\ \text{DU}}{\text{DU}} \times \frac{2.6\,\text{Residents}}{\text{Resident}} \times 1.25 \times 1.547\text{E}^{-6}\ \frac{80\,\text{gallons}}{\text{gpd}}\right) \cong \frac{0.1\,\text{cfs}}{\text{cfs}}$$

Commercial Zone

$$\left[\left(40\ \text{Totalacres} \times 0.85\ \frac{\text{Net Acre}}{\text{Acre}}\right) \times 1000\left(\frac{\text{Net acre} \times 1.25}{\text{gallons}}\right)\right] \times 1.547\text{E}^{-6}\ \frac{\text{cfs}}{\text{gpd}} \cong 0.1\,\text{cfs}$$

Calculate I&I Flow

$$\left(60 + 34\ \text{acres} \times \frac{1000\ \text{gallons}}{\text{netacre}}\right) \times 1.547\text{E}^{-6}\ \frac{\text{cfs}}{\text{gpd}} \cong 0.2\ \text{cfs}$$

Total Average Flow

$$\text{Total} = (0.1 + 0.1 + 0.2)\,\text{cfs} \cong .0.4\,\text{cfs}$$

Compute the Peak Factor to convert ADF to PDF

$$PF = 2.65\ 0.4(\ )^{-0.1014} \cong 3$$

Compute the Peak Design Flow

$$0.4 \times 3 \cong 1.2\ \text{cfs}$$

5.4 Design Criteria for Mainline Sewers

Use Manning's Equation to determine the pipe size and slope to carry the peak design flow. Refer to Chapter 8- Hydraulic Design for discussion about the application of this equation and other design aides for calculating pipe capacity and velocity.

5.4.1 Capacity

Design shall be for the full pipe flow at build-out conditions. Design sanitary sewers to convey the peak design flow with open channel conditions. BES only allows the design of surcharged systems where a submerged or partially submerged outlet requires such a design. BES must approve all exceptions to the open channel requirement.

5.4.2 Minimum Pipe Size

Eight inches is the minimum pipe size for a sanitary sewer.

5.4.3 Manning Roughness Coefficient

A Manning roughness coefficient "n" = 0.013 shall be used for sizing gravity sanitary sewers. Use this Manning roughness coefficient regardless of the pipe material specified.

BES has selected a constant value for the roughness coefficient although studies have shown it can vary as a function of flow depth, pipe size and material. Use of the constant value simplifies pipe design and provides an accepted standard for designing sewers without compromising the system integrity.

5.4.4 Minimum and Maximum Velocity

Design gravity sewers to carry the calculated peak design flow at a minimum velocity of 2.5 feet per second (fps). The maximum allowable velocity shall be 15 fps.

5.4.5 Minimum Slope

Design a sanitary sewer with a slope that achieves the specified minimum self-cleaning velocity for the expected design flow. For a pipe expected to flow at depths less than full use the peak design flow rate to establish a slope to achieve this velocity.

An exception to this requirement will occur when a sewer terminates at a manhole or cleanout where there are few service connections draining into the sewer. In this case, design a sanitary sewer with a minimum slope of 1 percent (0.01 feet/foot (ft/ft)).

5.5 Design Criteria for Sewer Service Laterals

Install a public sewer service lateral (SL) to provide sanitary service to each platted private property. The lateral shall be located within the ROW or an easement as follows:

- For a service lateral from a public sewer main in the ROW, extend the service lateral to the property line.
- For a service lateral from a public sewer main in an easement, provide a tee or wye only.
- For a service lateral through a private easement to a lot, extend the private service lateral in the private easement to the property line of the lot being served.

For a site with more than one building, plumbing regulations may allow a separate service lateral to serve multiple buildings on the same platted tax lot. For multiple tax lots with multiple buildings, the designer must obtain approval from the Bureau of Development

Services before providing service with one service lateral, regardless if the buildings are individually owned or if they have different owners.

There are many external factors that can influence a property owner's decision to construct a common private sewer or multiple building sewers for multifamily, commercial or Industrial property. Give special attention to the service line capacity that drains to a Common Private Sewer or any lateral that serves multi-family residential, commercial and industrial development. Also, give special attention if future possible or planned land divisions may result in separately owned buildings on different tax lots on a common private sewer.

5.5.1 Pipe Size and Material

The minimum lateral size is 6" for new sewers in the public ROW. When tapping or connecting to an existing sewer BES prefers a 6" lateral but under certain circumstances will approve a 4" lateral. Pipe material influences the minimum pipe size available for installation.

BES allows a 4-inch service lateral pipe when connecting a 4-inch building sewer from a one- or two-family dwelling to an existing sewer main. In a public sewer easement, the minimum diameter of a service lateral is 4 inches.

Sewer Service Laterals within ROW
Materials: Concrete, PVC and HDPE and Ductile Iron
Minimum pipe size~~s~~: 4-inches.

Laterals larger than 6-inches may be required to serve commercial, industrial or multi-family developments. Regardless of their size, design each lateral following the procedures and criteria described in this chapter.

Materials approved for lateral use within the ROW include concrete, PVC, HDPE and Ductile Iron. The City does not accept Acrylonitrile-Butadiene-Styrene (ABS) pipe anywhere within the public right-of-way or within any public sewer easement.

5.5.2 Horizontal Alignment

Service line tees shall be perpendicular to the sewer main to avoid excessive exposure of other utilities during excavation for construction or maintenance. Refer to Figure 5.2.
To avoid conflict with other utilities during either construction or when performing maintenance work the City requires three feet of horizontal separation between the outside wall of the sewer lateral and the corresponding utility line. Refer to Appendix F when working in proximity to potable water lines.

Lateral manhole taps require 12-inches of separation between the outer diameters of any existing pipe block out and that of the service lateral tap. Refer to 4.6 Pipe to Manhole Geometry for further guidance when connecting to a manhole.

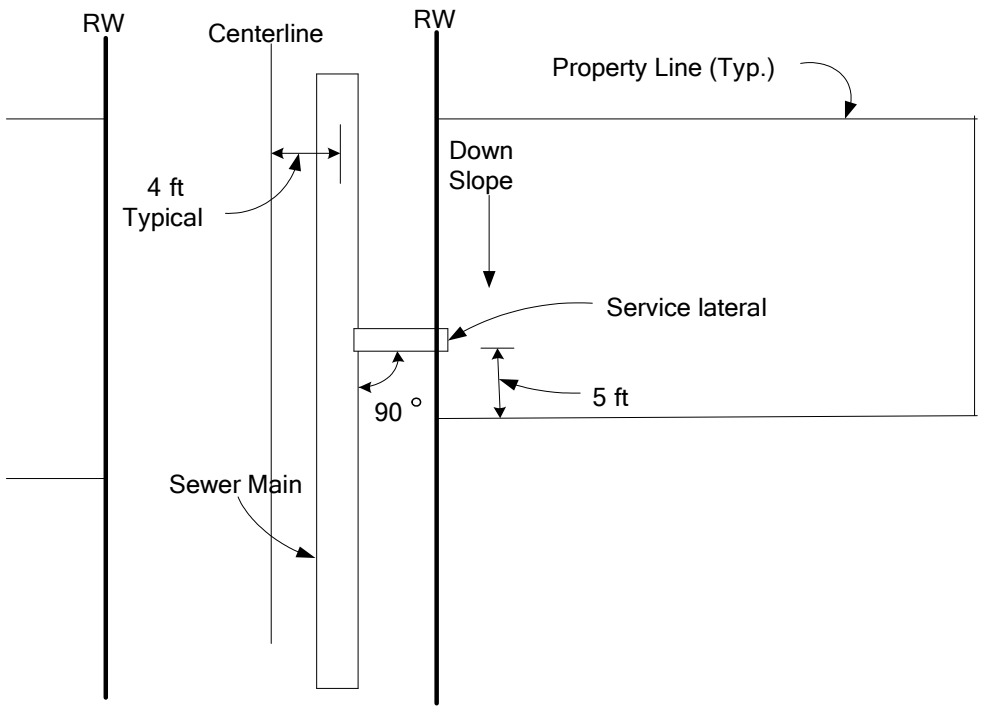

Figure 5.2 Service Lateral Horizontal Alignment

Particularly for sloping lots where service depth is critical, service laterals may be a minimum of five-feet from the downslope served property corner. Each proposed building or dwelling shall have an individual lateral, unless otherwise approved.

When a sewer terminates at a manhole BES will approve connection of a sewer lateral if such placement will not interfere with other existing or future connections or threaten the structural integrity of the manhole. In this case, a sewer lateral shall be oriented at 90 degrees from the axis of the downstream sewer. The lateral invert must be at the manhole invert. BES may approve an exception to this requirement when the manhole is greater than 15 feet deep. Refer to Chapter 4, Inside Manhole Drop Connection for design criteria.

5.5.3 Slope

Two percent or 1/4-inch per foot is the minimum sewer lateral slope for determining a sewer main design elevation. There is no maximum slope defined for a lateral inside a ROW or easement. However, when the slope exceeds 100 percent (45 degrees or one foot per foot) the designer should consider using a Deep Connection Riser (DCR). Refer to Chapter 5, Deep Connection Riser.

5.5.4 Vertical Alignment

A lateral's vertical alignment is influenced by many factors that include the service elevation, the distance from the main sewer, minimum cover requirements, conflicting utilities and site conditions.

BES requires a designer to show on the plan and profile the elevation of the lowest habitable floor of the dwelling or building (e.g. basement or first floor) served. If design constraints prevent service to the lowest floor, a note must be added to the drawings stating what floor elevation can be served with the proposed pipeline. BES must approve any deviation from serving the lowest habitable floor.

If the designer has knowledge of any proposed building on a parcel being developed, show these elevations on the plan and profile.

BES has established minimum cover depths to the top of the service lateral at the property line or the easement line. At a property line, the top of pipe shall be a minimum of 3 feet below the street grade. In an off-street area, the minimum cover is 3 feet.

To assure the sewer lateral has positive slope from its point of connection to the sewer main the lateral invert at the property line shall be at or above the crown of the sewer. (See Figure 5.3) Because there are extenuating circumstances when this is not feasible to achieve this criteria BES will review and may allow an exception to this standard.

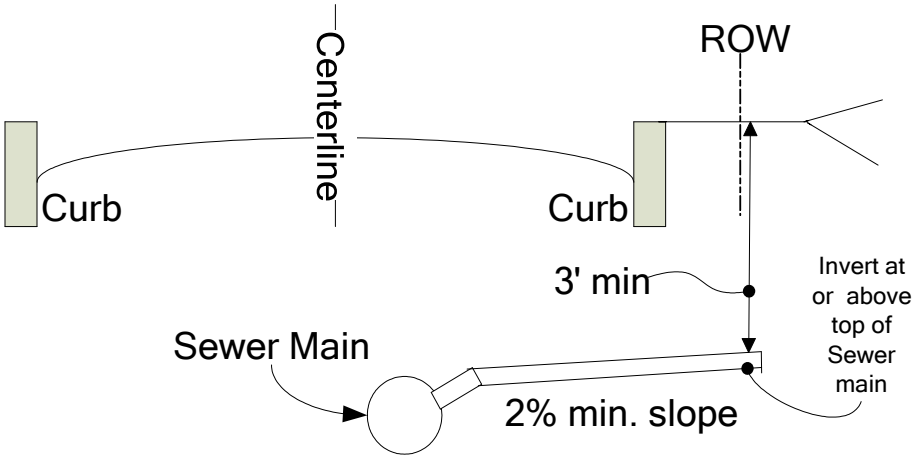

Figure 5.3 Sewer Lateral - Minimum Depth of Cover

To avoid surcharge under normal flow conditions a lateral invert at a sewer main must be at or above the pipe spring line. This requires the sewer main invert to be lower than that of the lateral invert. For a sewer reconstruction project or when pipes are upsized to control basement flooding, pay attention to establish all existing service lateral inverts. If necessary, design the new pipe at a greater depth to assure that any lateral invert will enter the pipe at or above the new pipeline spring line or reconstruct the lateral to avoid an operation problem.

Refer to Chapter 4, General Vertical Alignment for discussion of general standards. The designer shall submit for BES approval any exception to the minimum cover and slope requirement.

5.5.5 Calculating Service Lateral and Mainline Inverts

Use Equation 5.10 to determine the minimum service lateral invert elevation on the mainline sewer.

$$\text{LSE} - 2\text{feet} - \Delta - \tfrac{1}{2}\text{Main OD} = \text{Minimum Lateral Invert Elevation on Sewer Main}$$

Equation 5.10 Sewer Main Invert Elevation

Where:

LSE	=	Lowest service elevation determined at the site/building
2 feet	=	A standard dimension to provide the minimum clearance needed to construct a building sewer under a basement floor slab and building foundation and to account for other losses.
□	=	Elevation change calculated by multiplying 2 percent by either the distance to the point of connection on a building/dwelling or 100 feet, whichever is greater
1/2 Main OD =		One-half the sewer main diameter

Example 5.3 Calculate a Sewer Main Invert Elevation

Given: The distance from building sewer at the house to the mainline sewer = 100 feet. The proposed sewer main is a concrete ASTM C14 pipe 8-inches in diameter.

Required: Calculate the minimum elevation at the mainline sewer to provide gravity sewer service.

100.00 – 2 feet – (100 x 0.02) –(8/(12x2)) = 96.0 feet

By rearranging Equation 5.10 it is possible to calculate the minimum building elevation served with gravity service from an existing sewer main. Any living space below this elevation will not realize gravity sewer service without employing a different design. Equation 5.11 is the recast equation.

$$\text{Sewer main invert} + \frac{1}{2}\text{Main OD.} + \Delta + 2\text{feet} = \text{Min. gravity service elevation}$$

Equation 5.11 Lowest Building Elevation to Receive Gravity Service

See Figure 5.4 below for illustration of the defining reference locations and elevations.

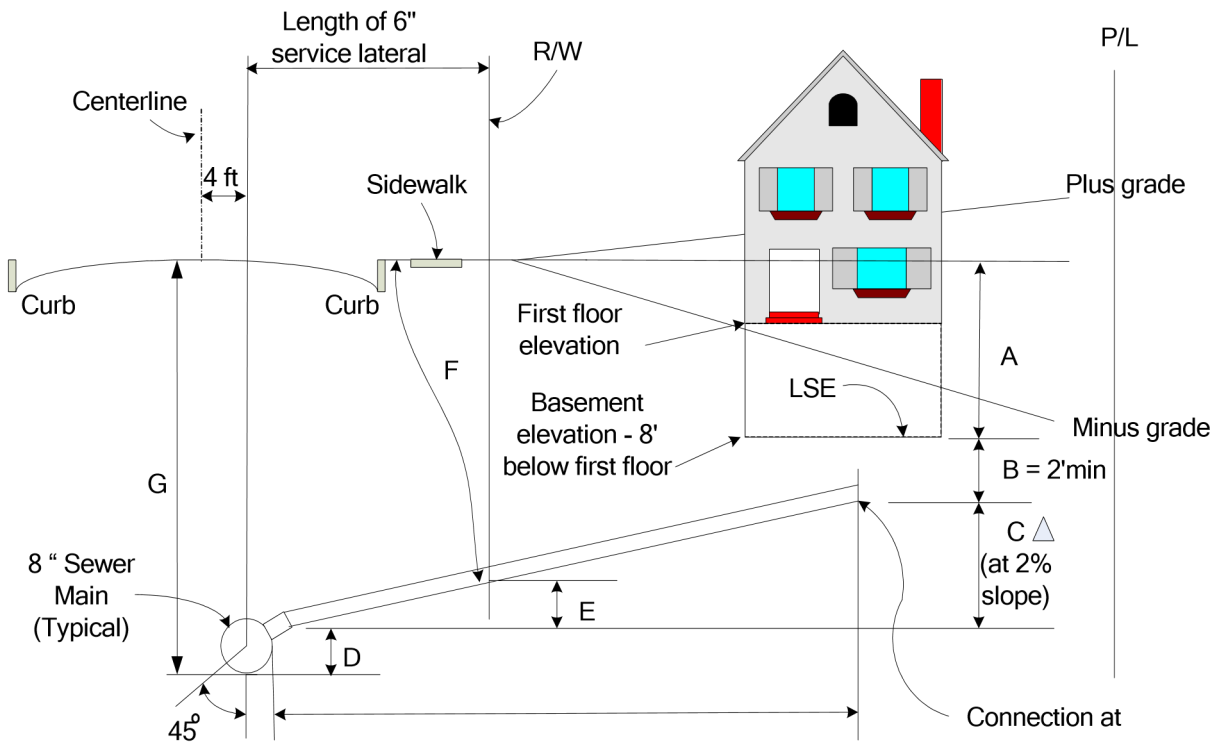

100 ' or Distance to building sewer building connection, whichever is greater foundation

LSE = Lowest Service Elevation determined at the site/building
A= Elevation difference between top of curb and lowest service elevation
B= Allowance for connecting to building sewer = 2 feet
C= Rise in pipe at 2% slope
D= Allowance for tap above springline and/or tee + 1/8 bend = 0.9' feet for typical 8" sewer main
E= Rise in service lateral within R/W @ 2% slope
F= Service lateral invert at R/W, F= A + B + C - E (Algebraically)
G= Invert of sewer main, G= F + E + D

Figure 5.4 Calculating Service Lateral and Sewer main Inverts

5.5.6 City Maintenance Limits of Responsibility

The City maintains only the portion of a service lateral located in the ROW (Contractor's Warranty period excepted). The scope and breadth of City maintenance activity is strictly limited. *Title 17.32.055 Maintenance of Sewer Systems* of the City Code describe the

activities the City will perform and defines what portion of a service lateral receives this maintenance.

The limits of City maintenance depend on whether the service lateral is located in a right-of-way or an easement.

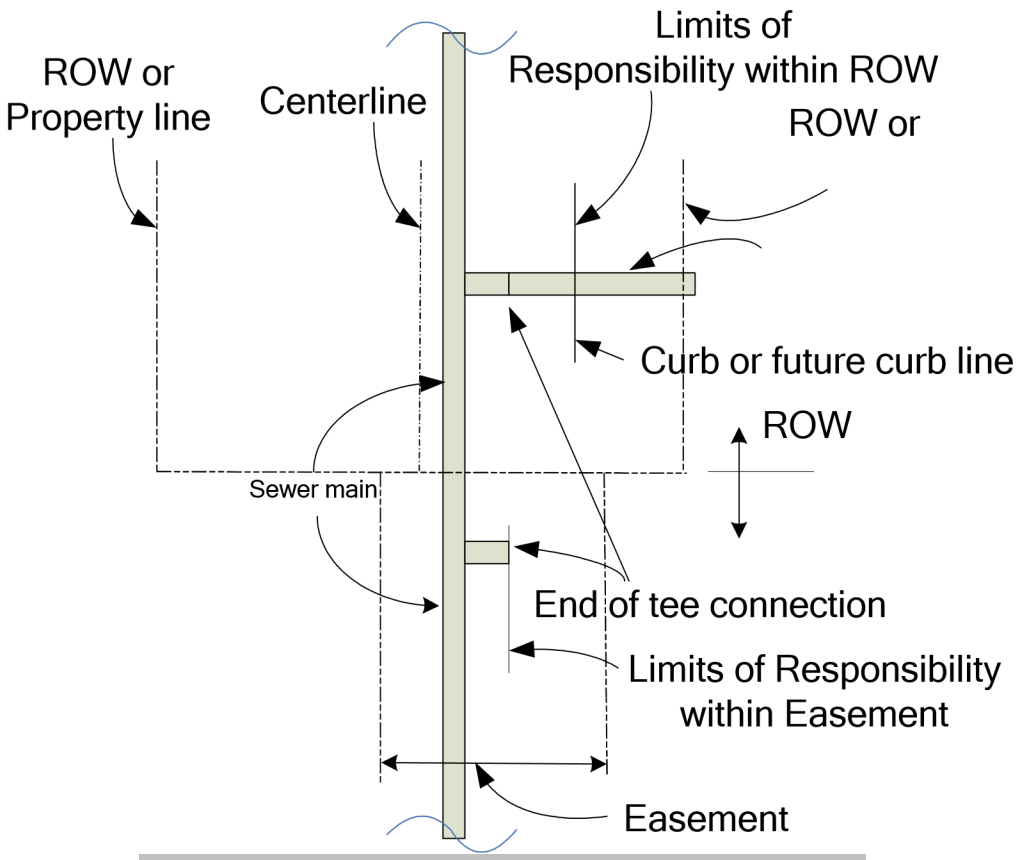

Figure 5.5 Limits of City Maintenance Responsibility

Right-of-way the City only maintains the service lateral located between the sewer main and the curb line or the projected future curb line, if no curbs exist.

An exception from the aforementioned maintenance limits occurs when a sewer lateral is located under a Green Street facility built with either a specified soil mix or multiple curbs that define the facility perimeter. When a property has such a facility along its frontage the City will maintain the lateral to the facility edge or curb that is located nearest to the property line.

Easement area The City only maintains the portion of a service lateral defined to the end of a tee fitting located on the main sewer or to the first pipe joint if out of a manhole.

The location of a future curb line depends on the street classification. The Office of Transportation defines five general street types that designers will encounter throughout the City. Each type has a specific configuration (e.g. number of travel lanes with or without parking) including right-of-way and pavement width requirements. Road classification

depends on the service level and traffic characteristics. The pavement width establishes the curb lines or future curb lines if none currently exist.

Table 5.3 presents pavement widths associated with five street ROW configurations defined by the Office of Transportation Pedestrian Standards. This information is intended to assist designers understand where the limits of City maintenance end. There are variations on these requirements depending on specific planning, site and development considerations.
Contact the Office of Transportation to confirm the applicable pavement width standard. Refer to Chapter 1, Useful Contacts Within the City.

Table 5.3 Street Pavement Widths for Locating Curb lines

Street Type	Pavement Widths, feet				
	Right-of-Way Width, feet				
	35	40	50	60 min.	80 min.
2 Lane Local Traffic	20	28	32		
2 Lane Local Queuing	20	26			
Neighborhood Collector				36'-40'	
Arterial				44'	
Commercial					44'-66'

Only when approved by the Chief Engineer, BES, designers may construct service laterals up to 5 feet beyond the right-of-way or public easement line onto private property. A service lateral constructed beyond this point requires the approval of the Plumbing Division, Bureau of Buildings. The plans should show the extent of the service lateral installed, and the extent of the City-maintained portion.

BES and the Bureau of Development Services (BDS) jointly publish the Rules for Sewer Connections, (refer to Appendix H), and applies to the design and construction of sewer laterals. This document defines the requirements for connecting a lateral to a public sewer or to repair, relocate, extend a sanitary service lateral to serve an existing building or a planned future use.

5.5.7 Connection to the Public Sewer System

All lateral connections to public sewers must be done in a manner that assures the integrity and serviceability of the publicly maintained portion of the system. Acceptable methods include a manufactured fitting or a field fabricated fitting that require coring and tapping of the sewer main or manhole to receive the lateral sewer.

Both the main and lateral pipe sizes and material types influence the connection method.

Taps to main sewers shall have a minimum separation of three feet from the outside diameter of the tap to any adjacent lateral. Only one tap is permitted per pipe section for concrete or clay sewer pipe.

The maximum service lateral diameter shall not exceed one-half the diameter of the main line pipe; however, BES allows exceptions to this requirement as long as the connection method presented in Table 5.1 is adhered to and BES approves the method.

Table 5.1 Connection Methods for Joining a Service Lateral to a Public Sewer Pipe or Manhole When an Existing Stubout or Fitting is not available for Use.

Lateral Pipe Size	Sewer Main Size, inches or Asset						
	4	6	8	10	12	>12	MH
4 inches	Fitting	Fitting	Core & Tap	Core & Tap	Core & Tap	Core & Tap	Core & Tap
6 inches		Fitting	Fitting	Fitting	Core & Tap	Core & Tap	Core & Tap
8 inches				Fitting	Fitting	Core & Tap	Core & Tap
>8 inches				Fitting	Fitting	Core & Tap	Core & Tap

Permitted manhole taps will require core drilling and/or saw cutting of the manhole wall at the penetration point before breakout of the manhole wall.

The connection method must allow the sewer flow to merge with the existing sewer flow in the main line.

5.5.8 USE OF WYE OR WYE-HEAD FITTINGS

BES discourages the use of Wye or Wye-head fittings anywhere in the public portion of the sewer system. The City requires that service lateral connections be oriented perpendicular to the sewer main to assist with locating the pipe in the future. Use of a wye fitting requires a second fitting to orient the lateral pipe perpendicular to the main. The City strives to reduce the number of fittings and joints used in the public sewer system to reduce opportunities where roots or failures could occur.

The City allows an exception to this practice under the Nonconforming Program and when addressing preexisting conditions. Wyes installed at the curb to serve separate properties will only be approved by BES when the connecting pipes are preexisting and the affected property owners are participating in the City's Nonconforming Sewer Conversion program.

5.6 Deep Connection Riser (DCR)

A deep connection riser is used where the depth of the sewer main or conflicts with existing utilities or other obstructions are located such to prevent the use of the typical service

lateral connection. Generally, four criteria must be satisfied to use a deep riser, as shown in Figure 5.6:

- The receiving sewer must have a minimum depth of 12 feet,
- The length of the deep riser measured from the main sewer invert to the top of the riser must be at least 3 feet.
- The slope from the sewer main to the building sewer invert at the ROW is greater than 100 percent (45 degrees).
- There must be at least 3 feet, minimum, of drop between the top of the riser and the building sewer invert at the ROW.
- More than one connection to a deep riser connection requires BES review approval

Field conditions may dictate deviations from these standards. BES must approve any deviation from these standards. If approved a designer must provide the stationing along the sewer main, the top elevation and the invert of the lateral at the property line. Refer to the City of Portland Standard Construction Specification Standard Plan 4-03-1, PVC Deep Connection Riser (see Chapter 1, Companion Documents and Internet Links.)

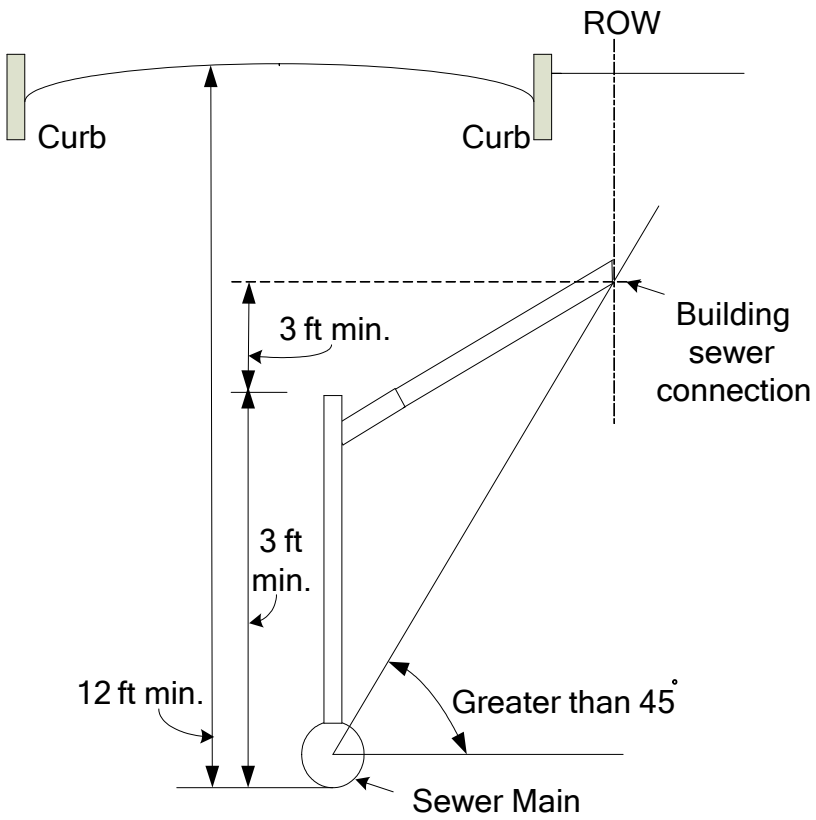

Figure 5.6 Deep Riser Connection

Example 5.4 Siting a DCR
Given: A private lot on a level site. The sewer main is 12 feet deep and the discharge point of the building sewer is 7 feet below the ground surface. Required: Locate a Deep Riser Connection. Under these conditions a DCR would not be approved for use, however, if the discharge depth were 6 feet or less a riser could be used.

§ BES recognizes four primary sources of wastewater in a sanitary sewer: 1) residential 2) commercial 3) industrial and 4) extraneous flows.

§ Minimum, average and peak flow rates determine the size and slope of a sanitary sewer.

§ Of the four primary contributing sources only Residential land use (i.e. SF & MF) relies on population estimates to calculate wastewater flow rates. All other land uses use developable land as the variable to calculate wastewater contributions. § The City's current Comprehensive Plan and Title 33 Zoning Code are to be referenced to establish criteria for designing a sewer.

§ For new development, BES uses the net developable acreage to design a sanitary sewer. At a minimum fifteen percent of the undeveloped area is dedicated to future right-of-way needs.

§ BES requires that the average calculated flow rate be increased by a contingency factor of 1.25 to account for unforeseen land use changes occurring in a drainage basin.

§ Use the calculated peak flow, calculated by multiplying an average flow by a peaking factor, to establish needed sewer capacity.

§ Eight inches is the minimum size accepted for a public sanitary sewer.

§ Use a Manning's roughness factor of 0.013 when designing sanitary sewer regardless of material type.

§ Minimum and maximum velocities in a sanitary sewer is 2.5 and 15 fps, respectively. § Minimum pipe slope shall be selected to maintain minimum self-cleaning velocity for the expected design flow. § A 4- or 6-inch public service lateral shall be provided to each platted private property, within a public right-of-way.

§ Service lateral tees installed perpendicular to a sewer main are preferred to avoid utility conflicts.

§ The minimum slope of a sewer lateral within the right-of-way is 2 percent.

§ Four criteria must be satisfied to use a deep connection riser in the right-of-way.

CHAPTER 6 – HYDROLOGIC ANALYSIS FOR DRAINAGE FACILITY DESIGN

Summary of Chapter 6

This chapter provides technical information and procedures for completing hydrologic analysis when designing storm sewers and not the performance aspects relative to water quality. Users of the Stormwater Management Manual (SWMM) may reference this information and these procedures to design the hydrologic aspects of water quality facilities.

This chapter introduces the citywide drainage system, how it functions in the broad context of stormwater management and establishes the facility types that will use this chapter for design. The remainder of the chapter discusses sizing drainage facilities for future development, the expected hydrologic performance objective (i.e. storm return period) for each facility type depending on its function within the system and comparison of several hydrologic analysis methods BES accepts for estimating and routing flows for facility design. The chapter closes with a discussion of hydraulic design criteria for closed conduits and open channels.

This chapter is organized in the following sections:

Introduction
Overview
Applicability
Facility Classification
Hydrologic Analysis – Flow Estimating and Routing
Design Criteria

6.1 Introduction

This chapter describes hydrologic analysis methods and procedures for designing public drainage facilities. This chapter applies to all public drainage conveyance facilities operating under gravity flow conditions.

Drainage facility design requires designers to understand and analyze the causes – (i.e. hydrology) and its effects (i.e. hydraulics) of runoff. Stormwater management involves the application of technical and non-technical strategies to minimize and avoid any resulting impacts. Use the information in this chapter to design structural drainage facilities to collect, transport, store or dispose of runoff.

The public drainage system is comprised of a variety of facility types including curb and gutters, inlets, storm sewer pipe, culverts, drainage channels and storage facilities. This chapter is the primary reference to calculate runoff volume and flow.

Use this chapter for designing **storm-only** separated drainage facilities, that is, those without connection with any sanitary sewer. **DO NOT USE** this chapter to design a combined sewer. Although stormwater is a major flow constituent in a combined sewer, a combined sewer has different hydrologic and hydraulic design criteria from those described in this chapter. Refer to Chapter 7 - Combined Sewer Design when designing a combined sewer.

6.2 Overview

Drainage facility design is one facet of the City's overall stormwater management program. The City's stormwater management program includes planning, policy, design and education. In the broadest sense, the goals of stormwater management are to correct existing problems and to prevent these and other new problems from occurring in the future. Stormwater management requires the use of information collected from different disciplines to effectively manage runoff and limit its impacts. Some of the most significant impacts are flooding, property damage, erosion and pollutant transport. Designers utilize structural and non-structural techniques to mimic an area's natural hydrologic character to lessen the impacts resulting from development.

6.3 Applicability

This chapter and the current SWMM complement one another and share several common elements related to hydrology analysis and hydraulic design. However, users of these documents must understand each document has limited applicability to different facility types found in the sewer system.

This chapter provides technical information and analytic procedures to design public structural drainage facilities, whereas, the current SWMM document is for the design of public and private water quality and pollution reduction facilities and including facilities to manage flow rate and volume control. Refer to Chapter 1, Relationship Between this Manual and the SWMM for discussion of how these documents relate to one another.

Private development is required to adhere to the current State of Oregon Plumbing Specialty Code. When designing a private development a designer may choose to reference this Manual or the current SWMM for design standards of facilities not covered by the current State of Oregon Plumbing Specialty Code, as allowed by the regulating authority. Therefore, before referencing the Sewer Design Manual or the SWMM, a designer must receive approval from the Bureau of Development Services (Refer to Chapter 1, Useful Contacts within the City),

6.3.1 Variance from these Standards

Departure from the City's drainage standards to less restrictive requirements is uncommon. Designers wishing to propose a variance from these standards need to read Chapter 2, The Design Variance Process - Requesting a Change from these Standards. Typically, a departure from the standards involves the application of a more restrictive standard to address unanticipated factors or design conditions. Conditions that could warrant the application of a more restrictive standard include:

- Where no overland flow route is available to safely carry runoff away from a facility subject to flooding.
- Where flooding an arterial street (Contact the Office of Transportation for a copy of the 1999 PDOT Transportation Plan for Street Classification definitions Refer to Chapter 1, Useful Contacts within the City) or other major transportation route could delay emergency services or the delivery of critical goods and services.
- Where flooding within a commercial district could damage expensive merchandise or equipment stored in buildings.
- Where flooding over a roadway embankment could result in a catastrophic road fill failure.
- Where over-topping of a storage facility or overloading the hydraulic capacity of a drainage facility would cause property damage or endanger life.
- Where flooding could endanger human health and safety, results in extensive property damage, or impacts the environment significantly.
- Where intentional impoundment or increase to the volume or depth of water could occur upstream of a road embankment that is not specifically designed for this purpose.
- Where the transfer of runoff between area drainage systems is proposed. BES must approve the plan. As part of a variance request for such a transfer, a designer must submit a complete analysis justifying a need to divert runoff from one area to another and identify all mitigating impacts and benefits.

6.3.2 Facility Sizing to Serve Future Development

Design all drainage facilities to meet the requirements presented in this Chapter. All development must also comply with the requirements defined in the current SWMM to manage runoff on-site or as close as possible to its point-of-origin.

Furthermore, the City encourages development to incorporate sustainable practices into a design to limit runoff resulting from these areas for certain storm events. Until development occurs it is impossible to predict when the improvements and the potential magnitude of runoff reduction will happen. Because of the inherent uncertainty regarding the timing and extent of development, BES does not allow downsizing any drainage facility smaller than the size required to manage runoff for the future build-out condition defined by the City's Comprehensive Plan and Zoning Code, as will occur under the current requirements of the SWMM.

Waiving this requirement requires documented proof a development will incorporate practices and operate and maintain facilities to achieve long-term performance (i.e. flow reduction) objectives. All development considered for receiving a waiver must implement the identified practice(s) and show conformance with design assumptions before City acceptance. Any variance requires BES approval, per Chapter 1.

6.4 Facility Classification

6.4.1 Return Period

BES assigns each drainage facility a design return period (RP) based on its expected level of operation and failure risk. The magnitude and severity of a storm relates directly to the RP. The longer the storm RP the larger the needed facility size to manage the resultant runoff and volume.

The RP is a measure of chance that a storm will occur in a specified time. The RP reciprocal (1/RP) is the likelihood that a storm equal to or exceeding the specified storm will occur in any one year. For example, an event with an assigned five-year RP has a 20 percent (i.e. 1/5) chance of occurring in any one-year duration. All drainage facilities must function optimally for a specific storm event. BES has established the following design standards for drainage facilities:

> *Design all storm drainage facilities to pass up to the 10-year storm (Except Columbia South Shore Plan District requires use of a 25-year storm) without surcharge and provide a means to pass a 25-year storm without damage to property, endangering human life or public health, or significant environmental impact.*
>
> *Runoff from a 25-year storm may surcharge a separated stormwater system but the hydraulic grade line (HGL) must remain a minimum of 6inches below the lowest critical elevation identified within the system. The critical elevation may be the ground surface or a property where potential flooding could occur, whichever is lower.*

A designer must evaluate and identify a route to safely carry any flow exceeding the 25year storm without damage to property, endangering human life or public health or significant environmental impact. Table 6.1 lists each facility type and its assigned design return period.

Table 6.1 Drainage Facilities with their Design Storm Return Periods

Facility Type	Design Storm Return Period, years
Street Gutter and Inlet	10 [1]
Piped Flow - Separated Storm Sewer (Conduit)	10 [2]
Surface Flow - Open Channel including Roadside Swale, Channel or Ditch	25 [3]
Culvert	25 [4]
Sump System	10[5]
Outfall	Variable
Flow Control Storage Volume	Variable [6]
Special Circumstances	Variable[7]
Bridges	ODOT Standards [8]
River with FEMA Floodplain	100

Notes: [1]
The design of a street gutter and the placement of an inlet depend on the safe collection and conveyance of the design storm flow and the allowable spread of water on the pavement. Refer to Appendix I Gutters, Inlets and Inlet Leads for information needed to design these facilities. [2]
Except 25 years in Columbia South Shore Plan District [3] Design roadside facilities to convey the design storm within a channel defined within the tops-of bank. [4] Design culverts to convey the specified design storm through a roadway fill without surcharging the inlet (i.e. water depth shall not exceed the inside height of the pipe crown). This is the minimum standard. There will be situations when the degree of failure risk is large enough to justify a design frequency greater than that specified. In these instances, BES will consult with the Office of Transportation to clarify the street classification established in the Transportation Element of the City Comprehensive Plan and determine if the RP for designing a particular culvert requires a different design RP. [5]
Use 10-year Design Storm with safety factor of 2 applied. [6] This refers to the storage volume needed to achieve a specific flow control objective. A facility is sized to manage flow volume whereas an outlet control structure is sized to release at a predetermined flow rate(s). The design volume is a function of the inflow and outflow hydrographs and the desired level of flow control. [7] Special Circumstances refer to facilities that require compliance with additional standards beyond BES's standards. For example, bridges receiving federal funding could require additional permitting and more stringent design constraints. Work in rivers with published floodplains would follow the Federal Flood Insurance Program procedures. Water bodies with native or migratory fish would require consult with NOAA Fisheries. All of these circumstances could significantly influence facility design.
[8] Follow the Oregon Department of Transportation (ODOT) Bridge Section Standards.

6.5 Hydrologic Analysis – Converting Rainfall to Runoff

Hydrologic analysis generally involves six steps to simulate rainfall and convert it to runoff.

- Select a Storm Return Period for a facility
- Select an Analysis Method to Convert Precipitation into Runoff
- Physically Characterize the Drainage Basin
- Calculate Time of Concentration
- Select Representative Precipitation/Storm Data
- Perform Routing Calculations

A fundamental assumption inherent in all of the selected analysis methods is that the return period of the rainfall and runoff are equal. This assumption is supported by the typical antecedent conditions just before a design storm event. In Portland, intense rainfall commonly occurs after an extended period of light rainfall, when typical light rainfall will have wetted the vegetation, saturated the soil and filled small depressions.

6.5.1 Select a Storm Return Period

Use Table 6.1 to select the design storm RP corresponding to the facility type of interest.

6.5.2 Select a Method to Convert Precipitation into Runoff

The City acknowledges five hydrologic single-event analysis methods suitable to design drainage facilities. They are:

- Rational Method
- National Resource and Conservation Service (formerly Soil Conservation Service (SCS)) TR-55
- Santa Barbara Urban Hydrograph (SBUH) Method

- Army Corp of Engineers Hydrologic Engineering Center (ACOE HECHMS) and the
- US Environmental Protection Agency Stormwater Management Model (EPA SWMM-Runoff)

The first three methods, Rational, NRCS TR-55 and the SBUH, employ hand calculation procedures or they can be automated using spreadsheet or commercial software applications. The two remaining methods, HEC-HMS and the EPA SWMM-Runoff require computer software to run.

All of these methods were selected for several reasons: 1) the City's historic use of them, 2) their proven reliability for the range of conditions experienced locally and 3) the availability of equations, design aids, computer programs and documentation that support these methods.

Table 6.2 lists these hydrologic methods and the circumstances for their use. Table 6.3 provides limitations on the use of the methods and specific facility design applications.

The City recognizes the limitations of all these methods and understands their results are only an approximation of natural phenomena and processes. The relationship between the precipitation falling on a surface and the amount of runoff produced is complex and too little data are available on all of the factors influencing the rainfall-runoff relationship to expect exact solutions.

A designer must use sound technical judgment when applying any of these methods. If necessary, make appropriate adjustments when specific site characteristics dictate departure from these standards, and document those assumptions as part of the approval process.

Table 6.2 Hydrologic Methods - Limitations and Applications

Method	Area Limitation	Application
Rational	Less than 50 acres	Use this method for estimating peak flows for the design of separated storm sewer pipes and conveyance facilities. Do not use this method for storage facility design.
Santa Barbara Urban Hydrograph (SBUH)	Less than 50 acres	This method is limited to estimating runoff hydrographs for designing a storage facility to control flow. Do not use this method for designing conveyance facilities.
SCS	Greater than 50 up to 1000 acres	Use this method to estimate peak flows and hydrographs for all design applications. Receive BES approval before using this method for design of a conveyance facility.
HEC-HMS	Greater than 50 up to 1000 acres	Use this method to estimate peak flows and hydrographs for all design applications. Receive BES approval before using this method for design of a conveyance facility.
SWMM	Greater than 50 up to 1000 acres	Use this method to estimate peak flows and hydrographs for all design applications. Receive BES approval before using this method for design of a conveyance facility.

Table 6.3 Design Applications of the Recommended Hydrologic Methods

Method	Rational Method	SCS Method	SBUH	HEC-HMS	SWMM
Overbank Flood Protection (Q_{25})		✔		✔	✔
Extreme Flood Protection (Q_{100})				✔	✔
Flow Control Storage Facilities		✔	✔	✔	✔
Outlet Structures		✔	✔	✔	✔
Diversion Structures		✔	✔	✔	✔
Gutter Flow and Inlets	✔				
Drainage Pipes	✔			✔ 1	✔ 1
Culverts < 50 acres	✔				
Culverts > 50 Acres				✔ 1	✔ 1
Small Roadside Ditches	✔				

Open Channels	✔			✔ [1]	✔ [1]
Energy Dissipation		✔ [1]		✔	✔

[1] Requires City approval

6.5.3 Rational Method

A. General

The Rational Formula is the most widely used method and it is an important method for determining ONLY the peak runoff rate for a specified storm return period. Several assumptions are inherent in this method:

- A single point-of-interest characterizes each contributing drainage area
- Constant rainfall intensity occurs uniformly over an entire drainage area for time duration equal to the T_c
- The estimated peak discharge has the same RP as the rainfall intensity (I)
- The runoff coefficient (C) remains constant during a storm event and for all storms with different RPs.

Because of these assumptions, it is possible the analysis of only the impervious area from a developed site (with its corresponding large C factor and shorter T_c) will yield a higher peak runoff value than when using the entire site. Designers should check for this condition particularly in areas where the overland portion is grassy (yielding a long T_c) to avoid underestimating peak runoff. When determining a C value, a designer should account for any future, land use changes that could occur during the facility Design Period.

Since this method relies on a composite C value and a single T_c, the distribution and grouping of different land uses will affect the results of hydrologic analyses. Consistently divide the drainage area into homogeneous sub-drainage areas.

Use of the Rational Formula requires a T_c for each design location within a drainage basin. The duration of rainfall is set equal to each area T_c to estimate the design average rainfall intensity, I, using the appropriate IDF curve.

B. Application

Use the Rational Method to design conveyance facilities including street gutters, drainage inlets, storm sewer pipes, culverts and small roadside ditches. It is most applicable to small, impervious, developed areas. Its use is limited to drainage areas of 50 acres or less and for which the T_c does not exceed 30 minutes.

Do not use this Method for storage facility design or any application where a hydrograph is required or when calculating peak flow for a downstream facility such as a bridge, culvert or storage facility that restricts flow, stores water and reduces the peak discharge rate.

C. Equation

The Rational Method estimates a peak runoff rate at any location in a drainage basin as a function of the runoff coefficient, average rainfall intensity for duration equal to the estimated, T_c and the drainage basin area.

The following equation relating all of these variables is the basis of the Rational Method.

$$Q = CIA$$

Where:
- Q = peak runoff, cfs
- C = runoff coefficient representing a ration between runoff to rainfall, dimensionless
- I = average rainfall intensity, inches/hour, for a design storm duration equal to T_c
- A = drainage area contributing to the point-of-interest, acres

Equation 6.1 Rational Formula

D. Runoff Coefficient (C)

A Rational Method runoff coefficient represents the ratio of the average rainfall intensity to the maximum runoff rate. The actual percentage of rainfall to runoff varies greatly depending upon many factors including: preceding rainfall, storm return period, soil, slope, vegetation, etc. Several inherent assumptions of this Method limit the variability of these factors and help to assure a conservative design.

Table 6.4 Runoff Coefficients for Developed Areas and Table 6.5 Runoff Coefficients for Undeveloped Areas present Runoff Coefficients for use with the Rational Method. Table 6.4 categorizes the coefficients according to typical City land use types corresponding to zoning, percent impervious, hydrologic soil type and ground slope. Table 6.5 groups the coefficients into different aggregate land uses classified for various surface characteristics, soil types and ground slopes. The coefficients from Table 6.5 were the basis for calculating the coefficients in Table 6.4

Since C is a variable least susceptible to precise determination and requires design judgment it is desirable to develop a composite runoff coefficient using the percentages of different surface types found in a drainage basin. Calculate composite runoff coefficients for non-typical land uses not found in Table 6.4 using the values from Table 6.5. The Runoff Coefficients in Table 6.4 represent “typical” values and may require adjustment when an area deviates significantly from the range of conditions cited.

E. Time of Concentration (T_c)

The Rational Method requires estimating T_c for each point-of-interest to select a corresponding rainfall intensity (I) from an Intensity Duration and Frequency (IDF) chart.

T_c is calculated from the most remote point of the area tributary to a point-of-interest. Under no circumstances can the T_c be less than 5 minutes.

F. Rainfall

Rainfall intensity is the rainfall rate, in inches per hour, for a given design storm. Use published Intensity Duration Frequency (IDF) curve data tabulated in Table 6.11 to select an intensity corresponding to the appropriate design storm RP and the estimated T_c.

Table 6.4 Rational Formula Method – Runoff Coefficients for Developed Areas. Average Impervious Area Percent for Typical Land Uses, Ground Slopes and Hydrologic Soils Groups

Percent Impervious	Hydrologic Soil Group	Drainage Area Slope			Typical Area Zoning, Service Road and Land Use
		Under <5%	5% to 10%	Over 10%	
0-10	A B C D	0.19 0.24 0.29 0.33	0.24 0.30 0.36 0.43	0.29 0.36 0.44 0.52	**Zones**: OS, RF **Street Type:** Local Queuing **Other:** Parks, Cemeteries and Playgrounds
11-20	A B C D	0.26 0.30 0.35 0.39	0.31 0.37 0.42 0.48	0.36 0.43 0.50 0.57	**Zones:** R20 **Street Types:** Local Queuing **Other:**
21-30	A B C D	0.34 0.37 0.41 0.45	0.39 0.44 0.49 0.54	0.44 0.50 0.56 0.62	**Zones:** R10 **Street Types:** Local Queuing **Other:**
31-40	A B C D	0.41 0.44 0.47 0.51	0.46 0.50 0.55 0.59	0.51 0.56 0.61 0.67	**Zones:** R7, R5 **Street Types:** Local Queuing **Other:**
41-50	A B C D	0.49 0.52 0.55 0.57	0.54 0.57 0.61 0.65	0.59 0.63 0.67 0.72	**Zones:** R2.5, R3 **Street Types:** Local Traffic & Neighborhood Collector **Other:**
51-60	A B C D	0.56 0.58 0.61 0.63	0.61 0.64 0.67 0.70	0.66 0.70 0.74 0.77	**Zones:** R2, C01 **Street Types:** Local Traffic & Neighborhood Collector **Other:**
61-70	A B C D	0.64 0.66 0.67 0.69	0.69 0.72 0.74 0.76	0.74 0.77 0.80 0.82	**Zones:** RN1, CN2, CO2 **Street Types:** Local Traffic & Neighborhood Collector **Other:**
71-80	A B C D	0.71 0.72 0.73 0.75	0.76 0.78 0.80 0.81	0.81 0.83 0.85 0.87	**Zones:** **Street Types:** Local Traffic & Neighborhood Collector **Other:**
81-90	A B C D	0.79 0.80 0.81 0.81	0.84 0.85 0.86 0.87	0.89 0.90 0.91 0.92	**Zones:** RH, CN1, CM, CS, CG, EG1, EG2, IG1, IG2 **Street Types:** **Other:**

91-100	A B C D	0.86 0.87 0.87 0.88	0.91 0.92 0.92 .0.92	0.96 0.97 0.97 0.97	**Zones:** RX, CX, EX, IH, IR **Street Types:** Arterial, Commercial **Other:** Any portion of a paved street

Notes: Any of the runoff coefficients may be adjusted to the nearest 0.05 to reflect any departure from these typical values. Any adjustment must be applied uniformly throughout a drainage area.

All Zoning designations reference the current City Comprehensive Plan. Designated Street Classifications reference the current Transportation Element of the City's Comprehensive Plan and any applicable Standards.

Table 6.5 Rational Formula Method – Runoff Coefficients for Undeveloped Areas. General Surface Characteristics, Ground Slope and Hydrologic Soil Groups

Surface Characteristics	Hydrologic Soil Group	Ground Slope		
		Under 5%	5% to 10 %	Over 10%
Woodland	A B C D	0.10 0.15 0.25 0.30	0.15 0.20 0.30 0.35	0.20 0.25 0.35 0.40
Lawn, Pasture and Meadow	A B C D	0.15 0.20 0.25 0.30	0.20 0.25 0.35 0.40	0.25 0.30 0.45 0.50
Cultivated Land	A B C D	0.25 0.30 0.40 0.50	0.35 0.45 0.55 0.65	0.50 0.60 0.70 0.80
Railroad Yard	-	0.25	0.30	0.40
Gravel Areas and Walks a. Loose b. Packed	-	 0.30 0.70	 0.40 0.75	 0.50 0.80
Pavement and Roof	-	0.90	0.95	1.00

6.5.4 Soil Conservation Service (SCS) Hydrograph Method

The SCS hydrologic method requires basic data similar to what is required for the Rational Method. However, it is more comprehensive in that it also considers a rainfalltime distribution (i.e. hyetograph), as well as rainfall losses to interception/depression storage and an infiltration rate that decreases during the storm duration.

A. Application

Use the SCS method to estimate a peak runoff rate and generate a hydrograph for routing flow. The method described is applicable for areas draining up to 1,000 acres. Thus, the SCS method can be used for most design applications including storage and outlet structures, drainage facilities, culverts, small drainage ditches, and open channels and energy dissipation facilities.

B. Equations

The SCS Method estimates an outflow hydrograph that represents the sum of all of the individual subarea hydrographs within a drainage area modified by the effects of travel

time and channel storage. Because this method assumes the physical characteristics of a drainage area including area, slope, soils, etc. are constant the approach assumes similarity in the hydrograph shape from storms of similar rainfall characteristics. The following discussion outlines the equations and basic concepts used in the SCS method.

The SCS derived a relationship between accumulated rainfall and accumulated runoff from experimental plots for numerous soils and cover conditions. The method relies on the following equation to estimate direct runoff from a 24-hour storm rainfall.

$$Q = \frac{(P - I_a)^2}{(P - I_a) + S}$$

Where
Q = accumulated direct runoff, inches
P = accumulated rainfall (potential maximum runoff, inches)
I_a = Initial abstraction including surface storage, interception, evaporation and infiltration before runoff, inches S = Potential maximum soil retention, inches

Equation 6.2 SCS Rainfall to Runoff

Through studies on many small agricultural watersheds, the SCS established an approximate empirical relationship between I_a and S expressed by the following relationship.

$$I_a = 0.2S$$

Equation 6.3 Theoretical Relationship Between I_a and S

Substituting 0.2S for I_a in equation 6.2 becomes:

$$Q = \frac{(P - 0.2S)^2}{(P - 0.8S)}$$

Equation 6.4 Rainfall to Runoff

To achieve further simplification the SCS redefined the parameter S in terms of the estimated CN obtained from analysis of an area's physical characteristics.

$$\text{Where } S = \frac{1000}{CN} - 10 \text{ and } CN = \text{SCS Curve Number}$$

Equation 6.5 S related to CN

C. Curve Number - Runoff Factor

Like the Rational Method, the SCS method uses the physical characteristics of an area to determine and assign a runoff factor (i.e. CN) to indicate an area's runoff potential. Higher CN factors correspond to higher runoff potential. The primary characteristics generally referenced when assigning CNs are the soil type and land use or ground cover conditions.

When analyzing a drainage area containing multiple land uses or surface and cover conditions that depart from the values given in Tables 6.6 and 6.7, the City recommends using a composite CN for analysis purposes. Generalizing a complex area with a lumped CN does not take into consideration the distribution of specific land uses but characterizes a drainage basin as containing uniform land uses represented by the composite CN. If a designer needs to develop a composite CN, calculate them using the weighted method as presented in Example 6.1

Because of this simplifying step and the implication this has when designing a facility, the City does not accept lumped CN analysis for any drainage area larger than 25 acres.

The different land uses within a basin should reflect a uniform hydrologic group represented by a single curve number. Any number of land uses can be included, but their spatial distribution is important to the hydrologic analysis, then sub-basins should be developed and separate hydrographs developed and routed to the point of interest.

D. Rainfall

The SCS method requires use of the standard SCS Type 1A rainfall distribution (hyetograph) and total storm depth corresponding to the critical storm duration to calculate runoff quantities. The hyetograph distributes the total rainfall volume for select storm frequencies and durations. Select a total rainfall depth from Table 6.10 Total Rainfall Depths for Various Storm Durations Recorded at the Portland International Airport (PIA) and apply the appropriate SCS Type 1A Hyetograph found in Table 6.12.

Table 6.6 SCS Method Runoff Curve Numbers for Urban Areas (Antecedent Moisture Conditions II)

Cover Type and Hydrologic Conditions	Avg. Percent Impervious [a]	A	B	C	D
Fully Developed urban area with vegetation established					
Open space (lawns, parks, golf courses, cemeteries, etc) [b]:					
Poor condition (grass cover less than 50%)		68	79	86	89
Fair conditions: grass cover < 50 to 75%		49	69	79	84
Good conditions: grass cover > 75%		39	61	74	80

Impervious Area:					
Paved parking lots, roofs, driveways (excluding right-of-way)		98	98	98	98
Paved: curbs and storm sewers (excluding right-of-way)		98	98	98	98
Paved: open ditches (excluding right-of-way)		83c	89	92	93
Gravel: (including right-of-way)		76	85	89	91
Dirt: (including right-of-way)		72	82	87	89
Urban Districts					
Commercial and business	85	89	92	94	95
Industrial	72	81	88	91	93
Residential Districts					
1/8 acres or less (e.g. townhouses)	65	77	85	90	92
1/4 acre	38	61	75	83	87
1/3 acre	30	57	72	81	86
1/2 acre	25	54	70	80	85
1 acre	20	51	68	79	84
2 acre	12	46	65	77	82
Developing Urban Areas					
Newly graded area (pervious area only, no vegetation)		77	86	91	94

Table 6.7 SCS Method Runoff Curve Numbers for Agricultural Areas (Antecedent Moisture Conditions II)

Cover Type and Hydrologic Conditions	A	B	C	D
Agricultural Land				
Pasture grassland or range – continuous forage for grazing:				
Poor: less than 50% ground cover or heavily grazed with no mulch	68	79	86	89
Fair: < 50 to 75% ground cover and not heavily grazed	49	69	79	84
Good:> 75% ground cover or lightly or occasionally grazed	39	61	74	80
Meadow-continuous grass, protected from grazing and generally mowed for hay	30	58	71	78
Brush-brush-weed-grass mixture with brush the major element:				
Poor: < 50% ground cover	48	67	77	83
Fair: < 50 to 75% ground cover	35	56	70	77
Good: > 75% ground cover	30c	48	65	73
Woods –grass combination (orchard or tree farm: d				
Poor	57	73	82	86
Fair	43	65	76	82
Good	32	58	70	79
Woods:				
Poor: Forest litter, small trees and brush are destroyed by heavy grazing or burning	45	66	77	83
Fair: Woods are grazed but not burned, some fresh litter covers the soil	36	60	73	79
Good: Woods are protected from grazing, litter and brush adequately cover the soil	30	55	70	77

Reference: Urban Hydrology for Small Watersheds, SCS, 1986 a

The average percent impervious area shown was used to develop composite CNs. Other assumptions are as follows: Impervious areas are directly connected to the drainage system, impervious areas have CN of 98 and pervious areas are considered equivalent to open space in good hydrologic condition.

b

CNs shown are equivalent to those of pasture. Composite CNs may be computed for other combinations of open space cover type. [c]

Actual CN is less than 30; Use CN=30 for runoff computations [d]

CNs were computed for areas with 50% woods and 50% grass (pasture) cover. Other combinations of conditions may be present.

Example 6.1 Calculating A Weighted Curve Number for a Mixed Use Area

Given: A 100 acre drainage basin containing the following mix of land uses: 80 acres Residential R-5 with HSG soil type – B and 20 acres of Open field in good condition with HSG soil type – C.

Required: Calculate a weighted CN for the area.

Land Use	% of Total Land Area	CN from Table 6.6 & 6.7	Calculated Weighted CN
Residential Lot R-5 Zoning Soil HSG - B	80	85	(80/100) x 85 = 68
Meadow – Good Condition Soil HSG - C	80	71	(80/100) x 71 = 14
	Total Weighted Composite CN = 82		

6.5.5 Santa Barbara Urban Hydrograph (SBUH) Method

The foundation of the Santa Barbara Urban Hydrograph (SBUH) method is the SCS Unit Hydrograph method. Like the SCS method, the SBUH method relies on the Curve Number approach to convert rainfall to runoff, however the SBUH methodology uses a different scheme to derive a runoff hydrograph. The SBUH method, unlike the SCS method, uses incremental runoff rates transformed into a series of instantaneous hydrographs and routes them through an imaginary reservoir with a routing constant inversely proportional to the time of concentration.

A. Application

Use the SBUH method to estimate a peak runoff rate and hydrograph for areas draining up to 50 acres. Use this method only for the design of flow control storage facilities and their associated inlet and outlet control structures. Do not use this method to design any conveyance facilities such as closed conduits, culverts, drainage ditches, open channels and energy dissipaters.

B. Equations

The SBUH method directly computes a runoff hydrograph without going through the intermediate step of developing a unit hydrograph and therefore is often simpler to use. It is ideally adapted for use in a spreadsheet format.

The first step is to compute the instantaneous hydrograph for each time step:

$$I(t) = \frac{60.5 \times R(t) \times A}{d_t}$$

Where I (t) = instantaneous hydrograph, cfs
R (t) = total runoff depth from both impervious and pervious areas, at time increment dt A = area, acres
d_t = time step, minutes. (The maximum time interval is 10-minutes for all design storms 24-hoiurs or less).

Equation 6.6 SBUH Rainfall to Runoff

Following development of an incremental input hydrograph, the method routes each hydrograph through an imaginary reservoir, using the following equation, to obtain the incremental output runoff hydrograph, Q_{t+1}.

$$Q_{t+1} = Q_t + w\left(I_t + I_{t+1} - 2Q_t\right)$$

Where: $w = \frac{d_t}{(2T_c + d_t)}$

d_t = time interval, minutes

Equation 6.7 SBUH Reservoir Routing

Summation all of the incremental output hydrograph produces the total storm runoff hydrograph volume.

The following discussion outlines the equations and basin concepts used in the SBUH method.

C. Curve Number Runoff Factor

The SBUH method uses the same area characteristics and procedures as described previously for the Soil Conservation Service (SCS) Hydrograph Method to determine and assign CN factor(s) to characterize an areas' hydrology.

D. Time of Concentration (T_c)

Each point-of-interest requires a T_c to determine the incremental hydrograph routing constant, w.

The travel time distance is determined from the point-of-interest to the most remote point of the area tributary to the location. If needed, the average the average hydrologic slope is determined for the same distance. Under no circumstances can the T_c be less than 5 minutes. **E. Rainfall**

The SBUH method uses a SCS Type 1A rainfall distribution along with a total 24-hour storm rainfall depth to compute a final hydrograph volume and peak flow rate. Refer to Tables 6.11 and 6.12 to obtain this information.

6.6 Computer Models for Drainage System Design

There are numerous proprietary and public domain computer programs for completing rainfall-runoff analysis. Every year many new programs are introduced to automate a hand-calculated procedure or to revise an existing program. Because of this variety of available models, the City limits discussion to two models that historically receive widespread use throughout the City. Both of these models are in the public domain. This does not mean that the City will not accept other proprietary models since many of these models are excellent and incorporate the same feature found in the identified public domain models.

Computer models provide the ability to describe the performance of an entire drainage system, incorporate various system components in detail that is not possible using hand calculations. However, it is false to assume that answers obtained from the model are more accurate. Do not exclude from consideration other methods of calculation.

6.6.1 HEC HMS formerly HEC-1

This computer model was developed by the Hydrologic Engineering Center of the Army Corp of Engineers. This program develops discharge hydrographs for one or more locations in a drainage basin. The basin can be subdivided into one or more sub basins. The model is designed to be applicable to wide range of problems including large river flood hydrology and small urban or natural watershed runoff. The model allows a wide variety of options for specifying precipitation, losses, runoff transformation and routing.

A list of the methods commonly used for City projects follows:

Table 6.8 HEC-HMS Analytic Methods

Hydrologic Process	Analytic Method
Precipitation	Type 1A SCS storm distribution or user defined synthetic hyetograph.
Losses	Soil Conservation Service Curve Number
Transforming Rainfall Excess to Runoff	Kinematic wave across multiple planes with intercepting channels
Routing through Stream Channels	Muskingum-Cunge and normal depth
Reservoir Routing	User defined Discharge Rating Curve

6.6.2 EPA – SWMM

The EPA Storm Water Management Model is a sophisticated single-event or long-term dynamic rainfall-runoff simulation model used primarily to model runoff quantity from primarily urban areas. It incorporates hydrologic processes as well as a flexible set of

hydraulic modeling capabilities to route runoff through the drainage system of pipes, channels, storage units and diversion structures. Using SWMM, one can simulate most urban storm runoff and routing processes. However, it requires experienced users to obtain the most benefit from all of its capabilities.

The SWMM program consists of six blocks. Three blocks are used for most drainage facility design. These blocks include: runoff, extended transport and executive.

The **Runoff Block** generates stormwater runoff hydrographs from various tributary drainage areas. This information can be input to subsequent model blocks. Runoff calculations are based on sheet flow kinematic wave principle for any excess runoff.

The **Extran Block** simulates the hydraulic response of a major drainage system. This block can also simulate storage facilities at any point in the system, and can account for backwater effects although sewer surcharging can underestimate needed storage volumes.

Table 6.9 describes SWMM parameters commonly used for City facilities.

Table 6.9 SWMM-RUNOFF and EXTRAN Blocks Analytic Methods

Hydrologic Process	Analytic Method
Precipitation	Type 1A SCS storm distribution or user defined synthetic hyetograph.
Losses	Explicit estimate of infiltration and surface retention factors
Transforming Rainfall Excess to Runoff	Kinematic wave across multiple planes with intercepting channels
Flow	Input from Runoff Block or hydrographs generated in another model.
Routing through Stream Channels	Provide geometry, roughness, and invert elevation of each facility including ground elevation at each node. Model calculates explicit solution to St. Venant equations
Reservoir Routing	User defined storage versus volume relationship at point of interest.

6.7 Precipitation Data and Antecedent Conditions

Precipitation data is required for all of the selected hydrologic analysis methods. The selection of a specific method determines the precipitation data needed to complete analysis. For example, the Rational Method requires rainfall intensity obtained from an Intensity Duration Curve (IDF). A majority of other methods such as SCS (SCS) Unit Hydrograph method use total rainfall depth. All of the identified analytical methods ignore precipitation in the form of snow.

6.7.1 Total Rainfall Depth

Several analytic methods use the total cumulative rainfall depth for different duration storms to calculate runoff. Table 6.10 lists the total rainfall depth for the 2- through 100-year storm events for durations of 1-, 6-, 12- and 24 hours at the PIA.

Table 6.10 Total Rainfall Depths for Various Storm Durations PIA

Return Period, years	Duration, hours			
	1	6	12	24
2	0.46	1.2	1.8	2.4
5	0.59	1.5	2.2	2.9
10	0.68	1.7	2.5	3.4
25	0.79	1.9	2.8	3.9
50	0.90	2.1	2.5	4.2
100	0.99	2.3	2.8	4.4

If necessary, designers will have to interpolate other durations from the data in Table 6.10.

6.7.2 Intensity-Duration-Frequency (IDF) Information

Rainfall intensity is the average rainfall rate, in inches per hour (in/hr) falling at a location. It is variable, not only from storm to storm, but also throughout the duration of a storm. Rainfall intensities do not follow predictable patterns; therefore, the City statistically analyzed historic rainfall data to develop a set of Intensity-DurationFrequency (IDF) curves for the Portland International Airport (PIA) that could be applied citywide with adjustment to account for local and regional factors that influence local precipitation patterns. Figure 6.1 is a graphical representation of the resulting statistic analysis of this historic rainfall data.

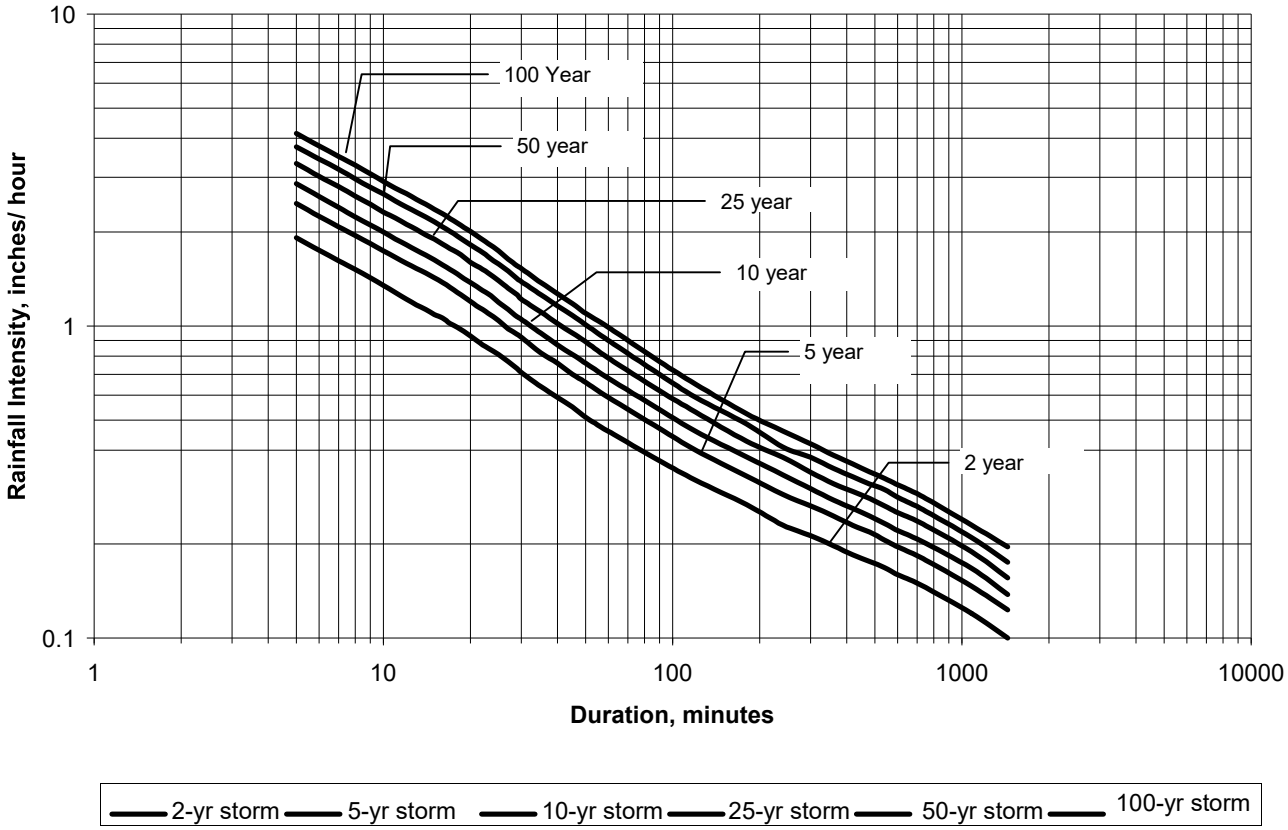

Figure 6.1 Intensity Duration Frequency (IDF) Curves for Portland, Oregon

Table 6.11 contains the tabulated data used to develop these curves. There is no precipitation value given for less than a 5-minutes duration.

Table 6.11 Tabulated Rainfall Intensity Duration Frequency Rainfall Data Compiled at Portland International Airport

Time, minutes	Rainfall Intensity, inches per hour					
	Return Period, years					
	2	5	10	25	50	100
5	1.92	2.47	2.86	3.32	3.75	4.14
6	1.75	2.25	2.60	3.02	3.43	3.78
7	1.62	2.08	2.40	2.80	3.18	3.50
8	1.52	1.95	2.24	2.61	2.96	3.28
9	1.43	1.84	2.11	2.46	2.79	3.08
10	1.35	1.74	2.00	2.32	2.65	2.91
11	1.28	1.66	1.90	2.22	2.52	2.77
12	1.22	1.59	1.82	2.12	2.41	2.66
13	1.17	1.53	1.75	2.04	2.32	2.55

14	1.13	1.48	1.69	1.96	2.24	2.46
15	1.09	1.43	1.63	1.90	2.16	2.37
16	1.06	1.38	1.57	1.83	2.08	2.29
17	1.02	1.33	1.52	1.77	2.01	2.21
18	0.99	1.28	1.47	1.72	1.94	2.14
19	0.96	1.24	1.42	1.66	1.88	2.07
20	0.93	1.20	1.38	1.60	1.82	2.01
21	0.90	1.16	1.34	1.56	1.77	1.95
22	0.87	1.13	1.30	1.52	1.72	1.89
23	0.85	1.10	1.27	1.48	1.67	1.84
24	0.83	1.07	1.23	1.44	1.62	1.79
25	0.81	1.04	1.19	1.40	1.58	1.74
26	0.79	1.01	1.16	1.36	1.54	1.69
27	0.77	0.98	1.13	1.32	1.50	1.64
28	0.75	0.96	1.10	1.29	1.46	1.60
29	0.73	0.94	1.07	1.26	1.42	1.56
30	0.71	0.92	1.05	1.22	1.39	1.53
35	0.64	0.82	0.95	1.11	1.26	1.38
40	0.59	0.76	0.87	1.02	1.16	1.27
45	0.55	0.70	0.81	0.95	1.08	1.18
50	0.51	0.66	0.76	0.89	1.01	1.10
60	0.46	0.59	0.68	0.79	0.90	0.99
90	0.37	0.47	0.54	0.62	0.70	0.77
120	0.32	0.40	0.46	0.53	0.59	0.65
180	0.25	0.38	0.43	0.50	0.55	0.61
240	0.22	0.35	0.40	0.46	0.51	0.56
300	0.20	0.32	0.37	0.43	0.48	0.52
360	0.19	0.30	0.34	0.40	0.44	0.48
420	0.18	0.27	0.31	0.36	0.40	0.44
480	0.17	0.25	0.29	0.33	0.36	0.39
540	0.17	0.22	0.26	0.30	0.32	0.35
600	0.16	0.16	0.20	0.22	0.25	0.28
720	0.15	0.15	0.18	0.21	0.23	0.26
1080	0.12	0.12	0.15	0.17	0.19	0.21
1440	0.10	0.10	0.12	0.14	0.16	0.18

6.7.3 Hyetographs - Rainfall Intensity Distributions

A hyetograph represents the incremental trace of rainfall depth over time. All of the selected hydrologic analysis methods, except the Rational Method, require input of a standard NRCS (SCS) Type 1A rainfall distribution. The City must approve the use of any other non-standard hyetograph.

Table 6.12 shows the Type 1A 24-hour design storm hyetograph. To construct a design storm hyetograph, multiply each time step rainfall distribution fraction times the selected design storm total rainfall depth, in inches.

Table 6.12 NRCS (SCS) Type 1A -24-hour Hyetograph – 10 –Minute Intervals

Minutes	Fraction of Total Depth	Minutes	Fraction of Total Depth	Minutes	Fraction of Total Depth	Minutes	Fraction of Total Depth
10	0.004	370	0.0095	730	0.0072	1090	0.004
20	0.004	380	0.0095	740	0.0072	1100	0.004
30	0.004	390	0.0095	750	0.0072	1110	0.004
40	0.004	400	0.0095	760	0.0072	1120	0.004
50	0.004	410	0.0133	770	0.0057	1130	0.004
60	0.004	420	0.0133	780	0.0057	1140	0.004
70	0.004	430	0.0133	790	0.0057	1150	0.004
80	0.004	440	0.018	800	0.0057	1160	0.004
90	0.005	450	0.018	810	0.0057	1170	0.004
100	0.005	460	0.034	820	0.0057	1180	0.004
110	0.005	470	0.054	830	0.0057	1190	0.004
120	0.005	480	0.027	840	0.0057	1200	0.004
130	0.005	490	0.018	850	0.0057	1210	0.004
140	0.005	500	0.0133	860	0.0057	1220	0.004
150	0.005	510	0.0133	870	0.0057	1230	0.004
160	0.005	520	0.0133	880	0.0057	1240	0.004
170	0.006	530	0.0088	890	0.005	1250	0.004
180	0.006	540	0.0088	900	0.005	1260	0.004
190	0.006	550	0.0088	910	0.005	1270	0.004
200	0.006	560	0.0088	920	0.005	1280	0.004
210	0.006	570	0.0088	930	0.005	1290	0.004
220	0.006	580	0.0088	940	0.005	1300	0.004
230	0.007	590	0.0088	950	0.005	1310	0.004
240	0.007	600	0.0088	960	0.005	1320	0.004
250	0.007	610	0.0088	970	0.005	1330	0.004
260	0.007	620	0.0088	980	0.005	1340	0.004
270	0.007	630	0.0088	990	0.005	1350	0.004
280	0.007	640	0.0088	1000	0.005	1360	0.004
290	0.0082	650	0.0072	1010	0.005	1370	0.004
300	0.0082	660	0.0072	1020	0.005	1380	0.004
310	0.0082	670	0.0072	1030	0.004	1390	0.004
320	0.0082	680	0.0072	1040	0.004	1400	0.004
330	0.0082	690	0.0072	1050	0.004	1410	0.004
340	0.0082	700	0.0072	1060	0.004	1420	0.004
350	0.0095	710	0.0072	1070	0.004	1430	0.004
360	0.0095	720	0.0072	1080	0.004	1440	0.0006

King County, 1990. Note: Rainfall values from Table 6.10 should be multiplied by each of the fractions in the above table to determine the amount of rainfall during each of the time-periods of the storm.

6.7.4 Antecedent Conditions

Antecedent conditions describe the wetness of soil just before a design storm event. In Portland, intense rainfall commonly occurs after an extended period of light rainfall. Often light rainfall will have wet vegetation, saturated soil and filled small depressions.

The NRCS defines three classes of Antecedent Moisture Conditions (AMC): dry (I); average (II) and wet (III). Runoff curve numbers vary with antecedent moisture conditions.

The City recommends AMC II for most hydrologic analysis. Designers concerned with flooding or other conditions during winter can adjust these standard CN values using Equations 6.8 or 6.9 to convert the standard CN values to wet or dry conditions.

$$CN\ III(\ ) = \frac{23CN\ II(\ )}{(10 + 0.13CN\ II(\ ))}$$

Equation 6.8 Convert Average CN Values to Wet Antecedent Conditions

$$CN\ I(\ ) = \frac{4.2\ CN\ II(\ )}{(10 + 0.058CN\ II(\ ))}$$

Equation 6.9 Convert Average CN Values to Dry Antecedent Conditions

6.8 Physical Characterization of Site

Runoff is the process whereby precipitation falling on a surface, accumulates and moves to a low point. All of the hydrologic analysis methods use several key physical variables to perform hydrologic analysis.

6.8.1 Area

Runoff is directly proportional to the drainage area size. Area includes all surfaces draining to a point-of-interest before and after development. Generally, the natural topography defines a drainage area boundary. Field investigation is often necessary to confirm conditions not shown on a topographic map. An actual drainage boundary can differ from a natural topographic drainage boundary because of development patterns and infrastructure improvements.

6.8.2 Land Use and Surface Type

The distribution of impervious and pervious surfaces defines an area's potential to generate runoff. Designers rely on maps or aerial photos to assess the distribution of impervious surfaces throughout an area. These easily quantified surfaces comprise the mapped impervious area (MIA). The MIA is that portion of a drainage basin covered with impermeable material. Mapped Pervious Area (MPA) is the area remaining after subtracting the MIA from the total area (Total Area – MIA = MPA). Most analytic methods define MIA and MPA as percentages of the total area.

$$\text{Total Basin Area} - \text{MIA} = \text{MPA}$$

Where: MIA = Mapped Impervious area, acres
MPA = Mapped Pervious Area, acres

Equation 6.10 Mapped Pervious Area

All of the identified hydrologic methods assume direct connection between the impervious and pervious surfaces and a drainage system. That is, all accumulated runoff flows directly into a drainage facility. This assumption also applies where runoff flows from an impervious area and travels over a short pervious area segment (e.g. less than 25 feet) and then into a drainage facility. BES accepts this simplifying assumption because it is impossible to explicitly define what percentage of MIA is unconnected in anything but the simplest area. Unless a designer provides detailed evidence to refute this assumption, assume the MIA and MPA percentages are fully connected and use these area estimates to calculate runoff.

BES may allow adjustment of the runoff coefficients used to convert rainfall to runoff if documented proof shows that a portion of MIA does not flow directly into a drainage facility because of modifications. The City's Downspout Disconnection program provides an example of one such program. This City sponsored program has successfully disconnected the roof downspouts for over 30,000 residences and eliminated the direct discharge of runoff into the sewer system.

6.8.3 Soils

In the 1980s, the National Resources Conservation Service (NRCS) (formerly Soil Conservation Service (SCS) completed and published soil surveys for the entire City Service area that includes land within three counties - Multnomah, Clackamas and Washington. Soils were classified into four hydrologic soil groups (HSG), A, B, C or D, depending on the soils' potential to infiltrate water and generate runoff.

Recently, the NRCS began a process to update the original Soil Survey documentation using geographic information systems and databases. This process lead to development of a Soil Survey Geographic (SSURGO) database which is available through the NRCS website (www:/nrcs.usda.gov). As a part of this modernization, NRCS refined many of the methods used previously to classify soils. This lead to adjustment in the mapped distribution of HSG soils encountered throughout the City Service area.

Figure 6.2 Hydrologic Soil Groups (see next page) presents this updated distribution of soils indicating the potential of a soil to generate runoff.

The soil map units most affected by these changes were Urban Land complex and Rock Outcrop. These map units, when reclassified according to the SSURGA criteria, in this case, Runoff Potential, resulted in much of the area to have greater runoff potential than what was shown in the original Soil Survey reports. For example, many of these targeted map units found in Multnomah County were reclassified from being originally HSG- B to become HSG-D.

Table 6-13 lists these soil group designations, their general characteristics and corresponding surface textures. Because the scale of the Figure 6.2 is so large and development continues to occur, there will be discrepancies between the soil distribution shown in the figure and evidence found on the ground. Designers are encouraged to perform geotechnical investigation including testing and analysis to supplement this general information. BES requires submittal of a geotechnical report with findings and recommendations when proposing on-site stormwater management practices (Refer to Chapter 3, Geotechnical Investigation Requirements).

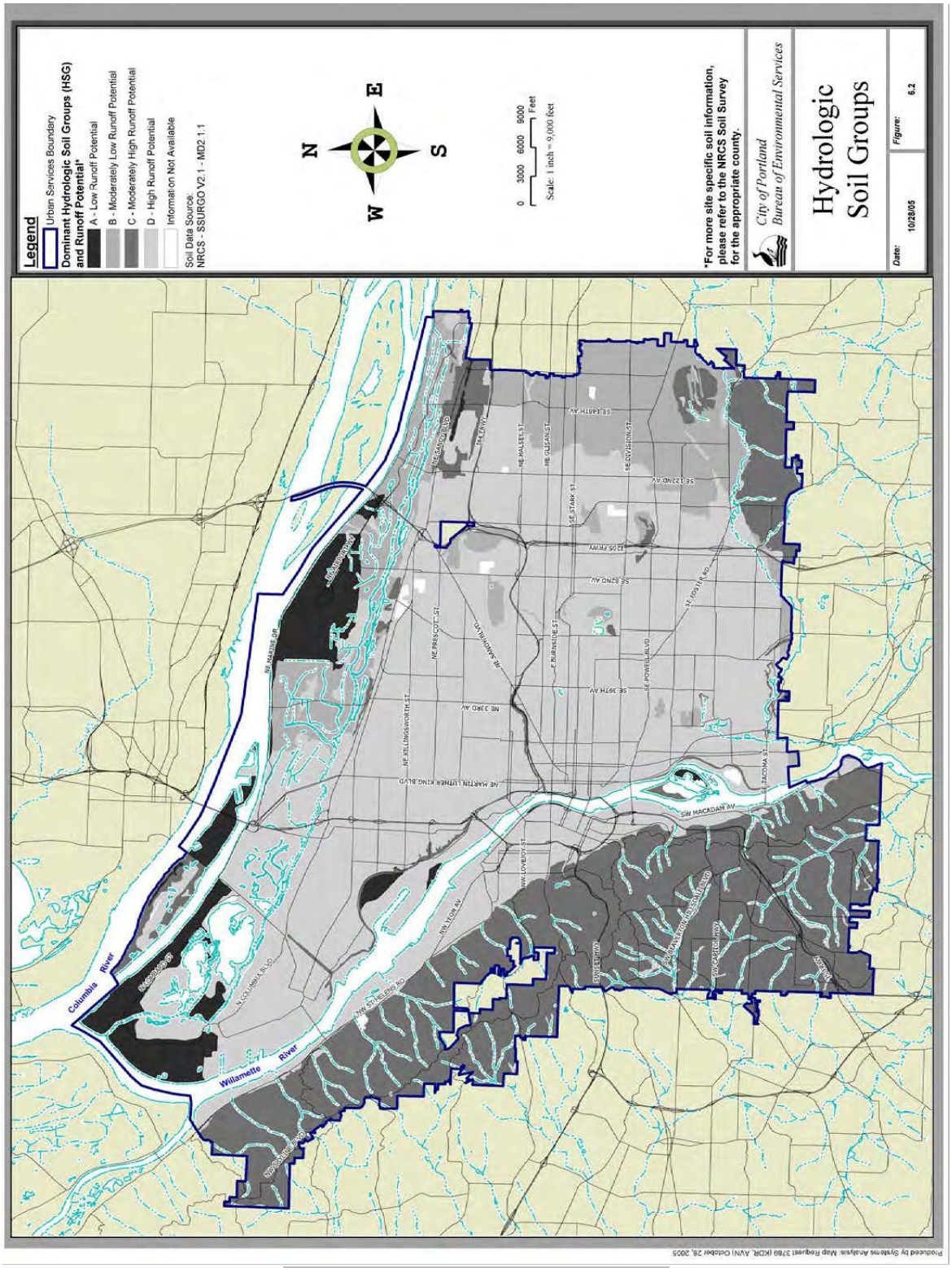

Figure 6.2 Hydrologic Soil Groups

Table 6.13 NRCS Hydrologic Soil Groups (HSG)

Hydrologic Soil Group	General Characteristics	Soil Textures
A	Low runoff potential and high infiltration rate	Sand, gravel, loamy sand or sandy loam
B	Moderate runoff potential consisting of moderately deep, well drained soil with moderately fine to moderately coarse textures with a moderate infiltration rate.	Silt loam or loam
C	Moderately high potential to generate runoff and low infiltration rate.	Sandy clay loam
D	High runoff potential and very slow infiltration rate due to high clay content or presence of impermeable material with an infiltration rate less than C type soils.	Clay loam, silty clay loam, sandy clay silty clay, or clay

6.8.4 Hydrologic Length and Slope

Hydrologic length, L_H, is the hypothetical continuous path runoff follows from the most remote contributing location to a point-of-interest. Its total length is the sum of different flow segment lengths that correspond to differing flow regimes (See below, Time of Concentration). The average slope of this path, S_H, is the difference in the ground elevation at its beginning and end. Along this path, the slope of individual flow segments will differ from this average slope. Use these individual segment slopes to calculate travel time and time of concentration for analysis.

For large or complex drainage areas containing a variety of different land uses or topography, select several homogenous areas and determine the slope for each and average the slope of them together to determine a representative area slope. The City accepts this simplifying assumption because it is impossible to explicitly define all of the potential slopes that could occur across anything but a very simple homogeneous area.

6.8.5 Lakes, Wetlands or Storage Facilities

Ponds, wetlands, undersized culverts through an embankment and constructed storage facilities are all examples of facilities that store and slow runoff from reaching a point-of interest. Inventory each area to determine the number and character of each of these features. Hydrographic analysis may be necessary depending on the size and location of each facility.

6.9 Time of Concentration

The time of concentration (T_c) defines the time for runoff to travel from the most remote contributing part of an area along the hydrologic length to a point-of-interest. T_c is the sum of elapsed Travel Times (ΣT_{tn}) as runoff moves along consecutive travel segments. The travel time (T_t) is the time it takes runoff to travel through a defined flow segment.

$$T_C = T_{t1} + T_{t2} + \cdots T_{tn}$$

Where T_c=Time of concentration, minutes
T_t=Travel time of individual segments, minutes
n = number of flow segments

Equation 6.11 Time of Concentration

There are common errors frequently overlooked when calculating T_c. In some cases, runoff from an impervious portion of a drainage area will produce greater peak flow than would occur from the entire area. Another common error is to overlook the change in the hydrologic length and slope before and after development. BES requires a minimum time of concentration of 5 minutes.

6.9.1 Flow Regimes

As precipitation transforms to become runoff, it passes through three flow regimes each that have differing characteristics. The three regimes are: sheet flow, shallow concentrated flow and open channel flow or some combination of these.

Sheet flow is the first segment where enough precipitation has accumulated on a surface to produce discernable runoff. For sheet flow, the travel time results directly from applying Equation 6.12.

Following sheet flow, runoff transitions into shallow concentrated flow or open channel flow that include flow in defined channels across surfaces as well in a gutter, a ditch or closed conduit. Calculating travel times for shallow concentrated and open-channel flow require a two-step process. The first step is to compute the average flow velocity of each regime segment using Manning's equation. After determining the average velocity, use Equation 6.12 to convert flow velocity to travel time in minutes. Table 6.14 presents these different flow regimes, their general characteristics and their associated system component.

There are other flow types that result from excess precipitation (e.g. inter-flow, groundwater recharge, etc.) but these do not directly contribute directly to surface runoff and therefore are not considered when designing drainage facilities.

Table 6.14 Flow Regime Types and General Characteristics

Flow Regime	General Characteristics	Drainage System Component
Sheet	Water in a thin layer (less than 0.1 foot deep) traveling over a flat sloping surface. Maximum distance = 300 feet	Natural surfaces, landscaped surfaces, impervious and pervious surfaces
Shallow Concentrated	Water with visible depth traveling in recognizable paths across a surface, includes gutter flow	Natural surfaces, landscaped surfaces, impervious and pervious surfaces
Open channel	Water with measurable depth flowing in a confined channel, depression or conduit. Can include gutter flow.	Open drains, roadside ditches, natural channels and street drainage pipe flow.

$$T_t = \frac{0.42\,(n\,L_{sH})^{0.8}}{1.58\,(S_H)^{0.4}}$$

Where T_t = Travel time, minutes
n_s = Manning's surface roughness coefficient for sheet flow from Table 6.15
L_H = flow length = hydrologic length, feet (ft)
S_H = hydrologic slope (land or watercourse slope), foot per foot, (ft/ft)
Constants = 1.58 is derived from (P2 0.5 =2.5 0.5 = 1.58). P2=2-year, 24-hour rainfall (inches) for Portland International Airport
0.42 = unit conversion factor

Equation 6.12 Manning's Kinematic Solution (Overton and Meadows 1976)

6.9.2 Sheet Flow

Sheet Flow usually occurs at the upper extent of a drainage area. Travel time for sheet flow is calculated using a simplified form of the Manning's Kinematic Solution (Equation 6.12) with the following assumptions: (1) shallow steady uniform flow, (2) constant intensity of rainfall excess available for runoff, (3) 24-hour rainfall duration, (4) minor effect of infiltration on travel time and (5) maximum flow segment length less than 300 feet.

With sheet flow, the friction value represented by the Manning's Roughness coefficient "n_s" completely accounts for the effect of raindrop impact, drag over a plane surface, obstacles such as litter and rocks, and erosion and sediment transport. Table 6.15, Manning's Surface Roughness "n_s" Coefficient, contains design values for calculating the T_t for various surface conditions where sheet flow occurs. BES limits the sheet flow length to a maximum distance of 300 feet.

Table 6.15, Manning's Surface Roughness "n_s" Coefficient for Sheet Flow Calculation less than 300 feet.

Surface Description	Manning's Surface Roughness, n_s
Concrete or asphalt	0.011
Bare sand	0.010
Graveled surface	0.020
Bare clay- loam (eroded)	0.020
Grass	
Short grass prairie	0.15
Dense grass – lawn	0.24
Bermuda grass	0.41
Woods	
Light underbrush	0.40
Dense underbrush	0.80
Paved Streets and Gutters	
Concrete gutter, trowel finished	0.012
Asphalt pavement	
Smooth texture	0.0.13
Rough texture	0.018
Concrete gutter with asphalt pavement	
Smooth	0.013
Rough	0.015
Concrete Pavement	
Float finish	0.014
Broom finish	0.016
For gutters with small slope where sediment may accumulate increase the n_s value by:	0.002

6.9.3 Shallow Concentrated Flow

Runoff, after traveling a maximum of 300 feet as sheet flow, becomes shallow concentrated flow. The estimated average velocity is a function of the flow slope and the surface condition or channel type. General Equation

The following general velocity equation is the basis for developing Figure 6.3 Average Velocities for Shallow Concentrated Flow, once flow has measurable depth, and for Equations 6.15 a. and b.

$$V = k\sqrt{S_H}$$

Where: V Velocity, feet per second (fps) k
Intercept coefficient relating velocity to slope
S_H Hydrologic slope, ft/ft

Equation 6.13 Average Velocity for Shallow Concentrated Flow

Compute "k" values for various surfaces and channel characteristics with assumptions made for the hydraulic radius, R_H, and the Manning's channel roughness coefficient, "n_{ch}" using the following form of Manning's equation:

$$k = \frac{1.49 \left(R_H\right)^{0.667}}{n_{ch}}$$

Where: R_H Assumed or estimated hydraulic radius, ft
n_{ch} Manning's roughness coefficient for open channel flow from Chapter 8 – Hydraulic Design

Equation 6.14 Manning's Equation

Use Figure 6.3, Average Velocities for Shallow Concentrated Flow to calculate the average runoff flow velocity for shallow concentrate flow on slopes over 0.005 feet per foot (ft/ft). For slopes less than 0.005 ft/ft, use equation 6.15a for paved surfaces and 6.15b for unpaved areas.

Figure 6.3 Average Velocities for Shallow Concentrated Flow

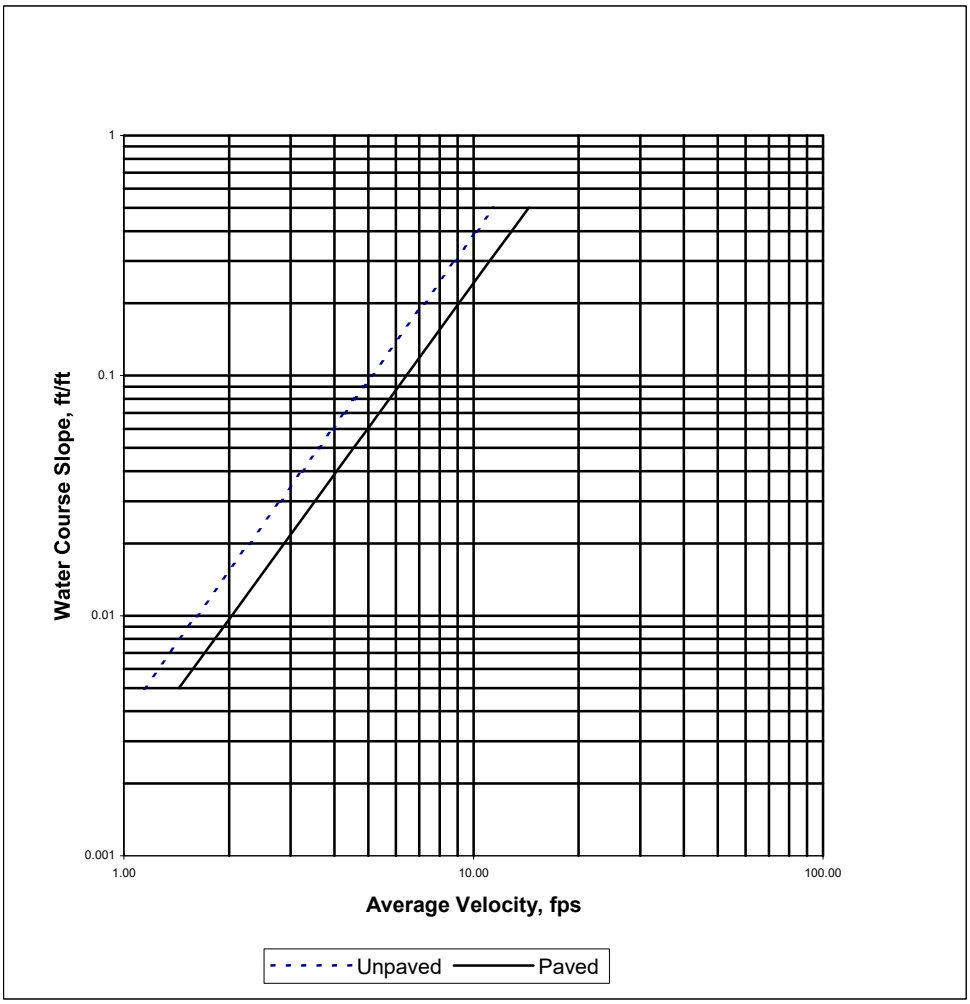

These equations assume solution of Equation 6.14 with different assumed values of n_{ch} and R_H For unpaved areas, assume n_{ch}=0.05 and a R_H=0.4, for paved areas, assume n_{ch}=0.025 and a R_H=0.2. If conditions differ significantly from these assumptions, a designer may use the values found in Chapter 8 – Hydraulic Design or other another accepted reference to better represent flow conditions.

$$\text{Paved Surfaces} \quad V = 20.3282\sqrt{S_H} \qquad \text{(a)}$$

$$\text{Unpaved Surfaces} \quad V = 16.1345\sqrt{S_H} \qquad \text{(b)}$$

Where: V = Velocity, fps
S_H = hydrologic slope, ft/ft

Equations 6.15 – Average Velocities for Shallow Concentrated Flow – Paved and Unpaved Surfaces

6.9.4 Open Channel Flow

Open channel flow begins where flow converges and normal depth increases. Usually it is where there is physical evidence of a defined flow channel such as a ditch, or drainageway or flow enters a closed conduit.

Equation 8.2, Manning's Equation – Hydraulic Capacity, (see Chapter 8), is the primary method for estimating average velocity in open-channel conveyance elements. When multiplied by flow area Manning's Equation calculates the open channel flow rate.

$$Q = \frac{1.486}{n_{ch}} A R_H^{2/3} \sqrt{S_H}$$

Where: Q Quantity of flow, cfs
n_{ch} = Manning's Roughness Coefficient from Chapter 8 – Hydraulic Design
A = Cross-sectional area, ft^2
R_H = Hydraulic radius, ft
S_H = Surface segment or conduit slope, ft/ft

Equation 6.16 General Form of Manning's Equation (8.2) for Calculating Capacity

Equation 6.17 is a special form of Manning's Equation for a Circular Conduit flowing pipe full:

$$Q = \frac{0.463}{n_{ch}} D^{8/3} \sqrt{S_H}$$

D = Conduit diameter, ft

Equation 6.17 Manning's Equation for Circular Conduit Flowing Full or Half-full

Converting Average Flow Velocity into Travel Time

Following determination of the average velocity for shallow concentrated and open channel regimes, Equation 6.18 will convert the known variables into the travel time for water to move through each flow segment.

$$T_t = \frac{L_H}{60 \times V}$$

Where:
- T_t = Travel time for individual segment, min.
- L_H = Hydrologic segment length, ft
- V = Flow velocity, fps
- 60 = Conversion factor

Equation 6.18 Flow Segment Flow Times

This equation indicates T_t represents the ratio between a segment's flow-length to the average flow velocity.

6.10 Design Criteria

6.10.1 Capacity

Use Manning's Equation 6.17 to determine a facility's size, shape and the corresponding slope to convey the peak design flow. Refer to Chapter 8 - Hydraulic Design for a discussion about the application of this equation for calculating capacity and velocity for pipes and channels.

Closed Conduit

Design shall be for full-pipe flow at build-out conditions. Design drainage facilities to convey the peak design flow with open channel (i.e. gravity) conditions. BES allows the design of surcharged systems following the criteria discussed previously.

Open Channel

Design open channels as either trapezoidal or parabolic cross-section. Avoid triangular or rectangular cross-sections because they are generally less efficient. General information on various channel cross-sections and their geometric relationships are found in Chapter 8 - Hydraulic Design.

To meet the growing emphasis on water quality, designers will design and retrofit more open channel drainage facilities with characteristics that accommodate this emphasis. Many of these facilities incorporate vegetation or geotextiles and need to be designed using factors that account for increased channel roughness owing to the use of these materials. Refer to Chapter 8 - Hydraulic Design. Refer to the ODOT Hydraulics Manual (ODOT, 1990) for additional roughness coefficients for major streams and floodplain areas.

6.10.2 Manning's Roughness Coefficient (n)

Closed Conduit

Design all gravity conduits using a roughness coefficient "n" equal to 0.013. Use this coefficient regardless of the specified pipe material. BES has selected a constant coefficient value although studies have shown it can vary as a function of pipe material, flow depth and pipe size. The use of a constant value simplifies design and provides an accepted standard for designing a drainage system without compromising system integrity. Receive approval before using other pipe materials and proposed n values.

Open Channels

Designers shall use appropriate values of Manning's Roughness Coefficients found in Chapter 8 - Hydraulic Design.

6.10.3 Minimum Conduit Sizes

The minimum inside diameter (ID) for storm sewers is 12-inches.

Inlet leads also follow this standard except that BES allows a 10-inch ID pipe downstream from a single concrete inlet.

Storm Sewer & Inlet Leads
Materials: Refer to Chapter 4 - Table 4.1
Minimum ID Size: 12–inches

Materials approved for use within the ROW are in Chapter 4 – Table 4.1 Gravity Sewers – Standard Pipeline and Joint Materials.

6.10.4 Minimum and Maximum Velocity

Closed Conduit

The minimum velocity in a drainage sewer should not be less than 3-feet per second (fps) or greater than 15 fps to carry the calculated peak flow in a pipe flowing full or halffull under gravity conditions. Setting a minimum velocity helps to prevent solids deposition and costly non-scheduled maintenance work. Generally, a velocity of 15 fps or greater can be tolerated within a public drainage system, however, when the velocity exceeds this upper value a designer needs to assure the City that they have given proper consideration to the selection of pipe material and joint design that address turbulence, abrasion, and forces at direction changes. If the flow rate exceeds 15 fps consider enhanced materials, plunge pools or other methods to dissipate energy and slow flow.

Open Channels

For open channels, the maximum flow velocity is generally the governing design criteria. Minimum velocity is a factor that must be considered only to assure that flow moves through a channel to maintain available capacity. Maximum velocities are selected to account for the type of channel lining material (e.g. soil, geotextile fabric, rock or riprap), as well as the type and condition of vegetation present.

Minimum and Maximum Velocity

Conduit:
- Minimum – 3 fps
- Maximum – 15 fps

Open Channels
- Minimum – 2 fps
- Maximum - 6 fps

Studies (AASHTO Model Drainage Manual, 1991) indicate that the range of maximum velocities in lined channels varies from 2 feet per second (fps) in a sand lined channel to 6 fps in channels lined with rock or hardpan. For vegetative lined channels, maximum velocities should be maintained below 4 fps. Refer to Chapter 8 – Hydraulic Design.

6.10.5 Minimum Slope

Closed Conduit

Design a storm sewer with a slope that achieves the specified minimum velocity for the expected design flow at build-out. An exception to this requirement occurs where a drainage sewer terminates at a manhole or cleanout where the runoff from the tributary area is significantly less than the pipe capacity at the minimum slope. In these cases, design a storm sewer with a minimum slope of 0.01 feet/feet (ft/ft) or 1%.

Inlet leads are a special case and exempt from this requirement. Refer to Appendix I when designing inlets and inlet lead pipes. *Open Channels*

Open channels shall be designed at a positive slope that allows the channel to drain freely following a storm event. The minimum slope shall be 0.1%. If this slope cannot be achieved then design the channel with features that encourage infiltration, water use by vegetation or evaporation.

6.10.6 Energy Losses

Pipe materials, junctions, transitions, flow expansions and contractions, bends, manholes, and other structures cause turbulence and increase energy loss in sewers and open channels. When the design capacity and flow velocity approach the minimum acceptable requirements, a designer must compensate for these energy losses in the design. Methods for determining energy losses are in Chapter 8 - Hydraulic Design.

Chapter 6 – Noteworthy Items

§ This chapter applies to the design of storm-only separated drainage facilities for conveyance.

§ Information overlap between this chapter and the SWMM is unavoidable. If a conflict is identified it is the designers responsibility to receive clarification before proceeding.

§ BES does not allow drainage facility downsizing to a size less than that required to manage runoff for the future build-out condition as defined in the Comprehensive Plan and Zoning Code.

§ The City's current Comprehensive Plan and Title 33 Zoning Code are to the references to establish criteria for designing a drainage facility.

§ BES has assigned each drainage facility found in the City a design storm return period. This criterion establishes the minimum expected level of operation and associated failure risk for each facility.

§ There are five hydrologic single-event analysis methods suitable to design drainage facilities: 1) Rational Method; 2) NRCS TR-55; 3) SBUH; 4) ACOE HEC-HMS and 5) EPA SWMM-Runoff. Each method has limits for application.

§ BES has defined total rainfall depth values, IDF curve information and rainfall hyetographs for use with each of the identified hydrologic analysis methods.

§ Antecedent Moisture Condition II representing average rainfall and runoff potential is recommended for performing hydrologic analysis.

§ Use a Manning's roughness factor of 0.013 when designing sanitary sewer regardless of material type.

§ Mapped Impervious Area and surface soil information are the primary factors that define runoff potential. Soil information follows the NRCD Hydrologic Soil Groups: A, B., C and D.

§ Time of concentration is comprised of three components: 1) Sheet flow < 300 feet, 2) Shallow concentrated flow and 3) Open channel flow §

The minimum storm sewer pipe is 12-inches.

§ Closed conduits and open channel have different minimum and maximum velocities because of differing material types.

§ Closed conduits and open channel have different minimum and maximum slopes.

CHAPTER 7– COMBINED SEWER DESIGN

Summary of Chapter 7

This chapter provides technical information and procedures for designing a combined sewer facility. This chapter provides a brief historic overview of the role and function that combined sewers play within the City's sewer system. Following this is a compilation of the facility types that will use this information for design, a discussion of the specific design criteria and the analysis methods when designing a combined sewer.

Combined sewers carry both sanitary wastewater as well as stormwater runoff. Many techniques and procedures discussed in Chapter 5 - Sanitary Sewer Design and Chapter 6 - Hydrologic Analysis for Drainage Facility Design can be applied directly to the design of combined sewer with refinements described in this chapter. This chapter presents specific revisions to tailor these techniques for the design of a combined sewer.

The organization of the chapter and major section titles adhere to the following outline:

Introduction
Combined Sewers in Portland
Applicability
Sizing Facilities
Design Flows
Analysis Methods
Design Criteria
Surcharging a Combined Sewer

7.1 Introduction

This chapter describes methods and procedures for designing a combined sewer facility for gravity conditions. Gravity flow is the primary flow condition the City desires throughout the citywide sewer system; however, because of the general age and locations of combined facilities, the City under controlled circumstances, allows them to surcharge (pressure flow). Section 7.7 describes when the City allows design of a surcharged combined sewer.

There are over 850 miles of combined sewers within the City. The area served with combined sewers includes the older parts of the City east and west of the Willamette River generally within a mile of the river.

This chapter focuses on the design of combined sewers to collect, route, store or dispose of combined wastewater and stormwater. Use the procedures in this chapter to design the following facility types:

- Combined sewers for gravity and surcharged conditions,
- Flow Control Storage facilities,
- Diversion structures

7.2 Combined Sewers in Portland

Combined sewers, first constructed in Portland in the 1800's, were considered state-ofthe-art when they were constructed. Unlike a separated sewer, a combined sewer collects and carries sanitary wastewater and stormwater in a single pipe. During dry weather, the majority of flow is sanitary wastewater; during a rainfall event, flow is a mixture of wastewater and stormwater; with the majority of flow being stormwater runoff. Originally, the combined sewers discharged directly into any available and nearby water body. As the system expanded, pipes were constructed along the smaller streams to transport the polluted stream flow, sewage and stormwater runoff to the larger rivers.

As the public's awareness about pollution caused by these discharges increased, the City built diversion manholes at the sewer outfalls to direct dry weather flow into an expanding sewer interceptor system that connected several combined sewer basin outfalls and delivered the dry-weather flow to a treatment facility. Today, a fact that is often overlooked when evaluating this system in the context of today's technology and regulations is that the hydraulic capacity of the original combined sewer diversions and pipes were designed to frequently overflow. When designed, these outfalls and pipes were typically sized for three times the daily dry weather flow based on expected development at the time. Over time, the additional areas of development draining to these systems has increased, further taxing the available system capacity.

Today, more than 125 years after the first combined sewer came into service, they remain an important component of the City's sewer infrastructure system. The City maintains ongoing programs to analyze and improve the existing system and update deficient sewers. These programs are coordinated with efforts to increase the interceptor system capacity to collect and treat combined sewage; further reduce overflows to water bodies to meet new regulations and to limit basement flooding. Continuing improvements to pipe materials, design methods and construction techniques will allow this system to continue to serve the City for another 125 years.

7.3 Applicability

This chapter applies to the design of combined sewers and their related facilities.

7.4 Sizing Facilities to Serve Future Development

Combined sewers must be designed to safely collect and deliver wastewater and stormwater in the same pipe from a drainage basin for full build-out conditions.

7.4.1 Sanitary Wastewater

Apply the methods and procedures presented in Chapter 5 - Sanitary Sewer Design to determine wastewater flow rates for a combined sewer with modification, noted in this chapter, when designing combined sewers.

7.4.2 Stormwater Runoff

Apply the methods and procedures presented in Chapter 6 - Hydrologic Analysis for Drainage Facility Design, with modification, noted in this chapter, when designing combined sewers.

7.5 Analysis Methods

BES recommends two analysis methods for combined sewers. The first, the Rational Method is a straightforward hand-calculation method. The second, PDX-SWMM computer model, was developed specifically for analyzing the City's Combined Sewer system. Table 7.1 lists the typical applications of these two hydrologic methods

Modeling is a fundamental part of the BES sewer design process. BES Systems Analysis staff and outside Consultants provide modeling services for the city. Wherever possible and appropriate, the modeling approach uses the standards contained in the BES Sewer and Drainage Facilities Design Manual. However, due to both the sophistication of and required planning horizons for many of these systems, there are cases where the Design Manual does not provide appropriate or adequate guidance on all modeling assumptions and inputs. In these cases, Systems Analysis will provide a written description of the issue to the BES Standards and Practices committee for evaluation and approval before final design.

Table 7.1 Design Applications of the Recommended Analysis Methods

Application	Methods	
	Rational Method	PDX-SWMM
Combined sewer pipes [1]	✔	✔
Flow Control Storage Facilities		✔
Inlet and Outlet Structures		✔
Diversion Structures		✔

Note: [1] Includes conveyance facilities, gutters, inlets and leads, and storm sewer pipes.

7.5.1 Rational Method

Application of the Rational Method was discussed in Chapter 6 - Hydrologic Analysis for Drainage Facility Design. All of the methods described in Chapter 6 are applicable to a combined sewer – see Table 7.2.

Table 7.2 Rational Method for Combined Sewers

Application	Criteria
Area	50 acres or less
Runoff Coefficients	Chapter 6 - Tables 6.4 and 6.5
Minimum T_c	Chapter 6 - Time of Concentration Minimum T_c = 5 minutes
Antecedent Conditions	Type II Conditions

7.5.2 PDX – SWMM

Applying PDX-SWMM requires a trained operator and detailed understanding of the structure the City has built into the program including model data sets, interface files and including all underlying assumptions.

7.6 Design Criteria

The capacity of a combined sewer requires a pipe size large enough to carry combined sanitary wastewater and stormwater flows. Generally, the peak stormwater flow defines a combined sewer's minimum hydraulic capacity.

Since combined sewer functions primarily as a drainage facility, the City defines its hydraulic performance by referencing a specific storm event with a corresponding return period (RP) designation.

Design a combined sewer to pass a 25-year storm without surcharge. Designers will need to evaluate and identify a route to carry and safely pass flows that exceed the 25year storm without damage to property or endangering human life or public health. Table 7.3 lists the primary system facility types and their assigned design return periods.

Table 7.3 Design Storm Return Periods for Drainage Facilities without Surcharge

Combined Sewer Facility	Design Storm Return Period, years
Combined sewer	25
Diversion Manhole	Variable
Flow Control Storage Facility	
Volume	Variable [1]
Outlet Control Structure	Variable

[1] This refers to the storage volume needed to achieve a specific flow control objective. The design storm(s) to size a facility volume could differ from the design storm(s) needed to design the outlet control structure.

7.6.1 Capacity

Use Manning's Equation to determine a facility's size and the corresponding slope to convey the peak design flow for build-out conditions. Refer to Chapter 8 - Hydraulic Design for discussion about the application of this equation for calculating capacity and velocity for combined sewer facilities.

Design shall be for full-pipe flow at build-out conditions. Design facilities to convey the peak design flow with open channel (i.e. gravity) conditions. BES allows the design of surcharged systems following the criteria presented in Section 7.7.

7.6.2 Manning's Roughness Coefficient (n)

All pipe shall be designed using a coefficient of "n"=0.013. Use this coefficient regardless of the specified pipe material. BES has selected a constant coefficient value although studies have shown it can vary as a function of material, depth and size. The use of a constant value simplifies design and provides an accepted standard for designing a combined sewer without compromising system integrity. Other materials and n values require City approval before use.

7.6.3 Minimum Conduit Sizes

Combined sewer pipe minimum inside diameter (ID) is 12-inches.

Materials approved for use within the ROW are in Table 4.1 Gravity Sewers – Standard Pipeline and Joint Materials.

Combined Sewer Minimum Size and Approved Materials

Materials: Chapter 4 - Table 4.1

Minimum ID Size: 12–inches

7.6.4 Minimum and Maximum Velocity

The minimum velocity should not be less than 3.0 feet per second (fps), in order to convey wastewater, or greater than 15 fps to carry the calculated peak flow in a pipe flowing full or half-full under gravity conditions. When the velocity exceeds this upper value, a designer needs to consider the selection of pipe material and joint design that address turbulence, abrasion and forces at direction changes.

7.6.5 Minimum Slope

Design a combined sewer to achieve the specified minimum velocity for the expected design flow at build-out. An exception to this occurs where a sewer terminates at a manhole or cleanout where the flow input from a tributary area is significantly less than the pipe capacity at the minimum slope. In these cases, design a combined sewer with a minimum slope of 0.01 feet/feet (ft/ft) or 1%.

7.6.6 Energy Losses

Pipe materials, junctions, transitions, flow expansions and contractions, bends, manholes, and other structures cause turbulence and increase energy loss in sewers. Since most sewers exceed the design flow requirements, there is usually excess capacity and velocity to overcome a majority of these normal energy losses. However, when the design capacity and velocity approach the minimum acceptable requirements, a designer must compensate for these energy losses in the design. Methods for determining energy losses are in Chapter 8 - Hydraulic Design.

7.7 Surcharged Combined Sewers

7.7.1 Background

The City of Portland prefers that all sewers operate under gravity-flow, open channel conditions but recognizes it may be impossible to meet this goal at all times because of planned and unplanned circumstances. Unplanned surcharge can cause undesirable conditions and unintended consequences.

The City uses reported sewer surcharge occurrences as a symptom to diagnose actual and potential problems. Surcharging could also indicate operational, structural and hydraulic failure.

Designing a sewer to surcharge is an acceptable engineering practice. Intentionally surcharging a pipe utilizes all available potential storage volume that exists in most sewer pipes. Structurally, many pipe materials can withstand intermittent internal pressure when a pipe surcharges. Minor, infrequent surcharging allows flow exceeding a sewer's hydraulic capacity to pass without triggering a replacement project, as long as property damage does not result. The potential negative aspects of allowing a sewer to surcharge could result in basement flooding, sanitary sewer overflow and structural damage.

When designed properly a surcharged sewer can optimize a sewer system operation and performance. All designers shall apply the following criteria whenever planning or designing a sewer or facility to surcharge.

7.7.2 Allowable Surcharge Criteria

Designers must verify all of the following criteria before BES will approve intentional surcharge of any existing gravity sewer.

1. Surcharge during a 25-year storm will not cause basement flooding under existing and expected build-out development conditions.
2. An existing pipe identified to surcharge is an approved rigid or flexible material (refer to Table 4.1 – Gravity Sewers – Standard Pipeline and Joint Materials) with gasketed joints able to maintain a watertight seal during and after surcharge.
3. Pipe segments and joints are in satisfactory condition.
4. Surcharge depth shall not exceed the lowest elevation determined when applying all of the following criteria:
   a. 4-feet above the maximum inside crown elevation, and
   b. 16 feet above the lowest invert elevation, or,
   c. Any service where the likelihood of basement flooding exists.
5. The maximum duration for surcharge is 30-minutes.
6. On the average, a surcharge event does not occur more frequently than once annually.
7. The sewer is not an un-lined or un-reinforced brick sewer.

The depth of allowable surcharge varies as a function of pipe slope and depth of invert. Any existing service elevation below the lowest calculated surcharge height will limit the allowable surcharge height.

7.7.3 Exceptions Requiring BES Approval

1. New Sewers - Surcharge a new sewer only if the condition results from backwater occurring in an existing downstream sewer that has met all of the Allowable Surcharge Criteria. If any sewer service basement floods, limit the surcharge height below this limiting service elevation.
2. Maximum Surcharge Height– Exceed the allowed maximum height only when:
   a. No identified service elevation is below the proposed maximum surcharge height.
   b. The sewer system design (e.g. pipe, joints, and connection details) allows for the increased pressure resulting from a surcharge height greater then the allowed maximum. Document the analysis and system design modification(s) required for managing the increased pressure.
3. Willamette River Outfall Sewer – Sewer outfalls adjacent to the Willamette River surcharge because varying uncontrolled river levels often exceed the inside crown of the outfall pipe. The City references 18.0 MSL during a 25-year storm as the standard maximum river level to evaluate the performance of a basin sewer system including its outfall. Upstream sewers that surcharge during this event may be exempt from some of the Allowable Surcharge Criteria. Designers shall identify sewers upstream of river outfalls that are subject to flooding during the standard maximum river level.
4. Storage Facilities – Storage facilities are part of the citywide CSO management control strategy. They operate by temporarily storing excess combined sewer flow for later controlled release and treatment. During normal operation, a facility could exceed the maximum surcharge height limits, however, it must never cause or exacerbate basement flooding.

7.7.4 Serving and Protecting Future Development from Basement Flooding

The City will attempt to provide gravity service at the depth of the existing sewer, unless physical constraint(s) or unforeseen circumstances constrain the sewer location and depth.

The City will not consider deepening an existing sewer to provide gravity service to a future development when the existing sewer provides only first floor service.

A sewer designed to operate under temporary surcharged conditions must provide future development with the same protection from basement flooding that existing development receives.

Designer will identify each lot with a note that states, “No Basement Service provided” if it is determined not to receive basement service. This note shall be displayed on the cover sheet of the Plans. Include this information in the Final Design Report.

Chapter 7 – Noteworthy Items

§ This chapter applies ONLY to the design of combined sewer facilities that convey wastewater containing a mixture of sewage and rainwater.

§ Design a combined sewer using the individual analysis methods for each component that makeup the combined wastewater (e.g. sanitary flow and drainage flow). Add these individual components to determine the design flow rates for sizing these facilities.

§ Design combined sewer facilities to convey the peak flow rate for the future build-out condition as defined in the Comprehensive Plan and Zoning Code.

§ The City's current Comprehensive Plan and Title 33 Zoning Code are to the references to establish criteria for designing a drainage facility.

§ It is the City's plan to design all combined sewer facilities to convey the 25-year peak flow without surcharge. However, BES recognizes that portions of the system can and do surcharge due in part to the age and complexity of the existing combined sewer system. If surcharging is unavoidable BES has defined specific criteria to follow to insure impacts are minimized and public health and safety is maintained.

§ Two analysis methods are recommended for completing design of a combined sewer. They are 1) the Rational Method and 2) PDX-SWMM. Each method has limitations that a user will need to recognize when applying either method.

§ Use a Manning's roughness factor of 0.013 when designing a combined sewer regardless of material type.

§ The minimum size of a combined sewer pipe is 12-inches.

§ Maintain a minimum velocity of 3 fps and a maximum velocity of 15 fps.

§ Minimum slopes shall be selected to achieve the minimum self-cleansing velocity for the expected design flow at build-out.

CHAPTER 8– HYDRAULIC DESIGN

Summary of Chapter 8

This chapter presents criteria and design information to guide the design of hydraulic facilities to collect, transport, store and dispose of wastewater and stormwater runoff.

This chapter does not attempt to describe in detail all design situations and problems that may be encountered working throughout the City. Designers are directed to the references listed in the appendices for additional information and detail.

The chapter is organized to follow the section titles presented in the following outline:

- Introduction
- Flow Friction Formula
- Methods of Application and Calculation
- Closed Conduits
- Open Channels
- Outlet Structures
- Secondary Outlets
- Trash Racks and Safety Grates
- Energy Dissipation

8.1 Introduction

Designers utilize hydraulic calculations to design sewer facilities to collect, transport, store and dispose of wastewater and stormwater runoff. For the majority of hydraulic facilities encountered within the City assume flow is one-dimensional, incompressible, steady and uniform. All of the design methods assume the sewer system operates according to open channel, gravity-flow design principles. To maintain open channel flow, the water surface must remain open to atmospheric pressure. For pipes, this means the flow depth is less than the inside conduit diameter. All natural channels, by definition, meet this criterion because their water surface is always opened to the atmosphere. In open channel flow, the slopes of the water surface and the energy grade line are assumed equal to the slope of the conduit invert or channel bottom.

8.2 Flow Friction Formula

The Manning Equation is the recommended flow friction formula to design channels and conduits. The Manning's Formula is:

$$V = \frac{1.49}{n_{ch}} R_H^{\frac{2}{3}} \sqrt{S_H}$$

Where: V - Average velocity, fps n_{ch} – Manning's Friction factor for open channel conditions

R_H – Hydraulic radius, ft

S_H – Invert or channel slope, ft/ft

Equation 8.1 Manning's Friction Formula

Manning's Formula is used for pipes and open channels of all shapes and sizes either flowing full or partially full. Graphs and nomographs are available to aid in the solution of this equation for a variety of facility types.

8.3 Methods of Application and Calculations

Closed pipe and open channel systems transport wastewater or stormwater runoff to a point of interest. Typical computations involve determining the hydraulic capacity, channel slope and water surface elevations at critical locations such as at a junction structure. For these applications, a level water surface is assumed to connect the locations of interest. Complex flow calculations may require modeling studies to better understand overall system performance.

All prismatic conduits and channels, without backwater, assume the slope of the energy grade line, water surface and channel bottom are equal.

To determine the hydraulic capacity of a facility, Manning's Formula is recast in terms of discharge and the formula becomes (Equation 8.2):

$$Q = \frac{1.49}{n_{ch}} A R_H^{\frac{2}{3}} \sqrt{S_H}$$

Where: Q – Flow rate, cfs

A – Cross-sectional flow area, ft^2

Equation 8.2 Manning's Equation – Hydraulic Capacity

To calculate the capacity for a pipe flowing full, Equation 8.2 can be reformulated to become Equation 8.3:

$$Q = \frac{0.463}{n_{ch}} D^{\frac{8}{3}} \sqrt{S_H}$$

Where: D – diameter of circular pipe, ft

Equation 8.3 Manning's Equation – Capacity Full - Pipe Flow

To calculate the velocity for a pipe flowing full, Equation 8.2 can also be simplified to become Equation 8.4:

$$V = \frac{0.590}{n_{ch}} D^{\frac{2}{3}} \sqrt{S_H}$$

Equation 8.4 Manning's Equation – Full - Pipe Velocity

Manning's Formula can be rewritten to determine friction losses for a conveyance facility as either a function of slope, length and flow velocity (Equation 8.5), or,

$$H_f = \frac{\left(2.87\, n_{ch}^2 V^2 L\right)}{S_H^{\frac{4}{3}}}$$

Where: H_f – Total head loss due to friction, ft
L – Length of conduit or channel, ft

Equation 8.5 Manning's Equation – Headloss As A Function Of Slope, Length And Average Flow Velocity

as a function of flow depth, length and velocity (Equation 8.6).

$$H_f = \frac{\left(29\, n^2 V^2 L\right)}{R_H^{\frac{4}{3}}\, 2g}$$

Equation 8.6 Manning's Equation – Headloss As A Function Of Length, Flow Depth And Velocity

For a pipe flowing full, Manning's Equation can be recast to compute the corresponding slope required to maintain a minimum average to maintain self-cleaning conditions (Equation 8.7):

$$S_H = 2.88 \left(\frac{n V}{D^{\frac{2}{3}}} \right)$$

Equation 8.7 Manning's Equation – Full Pipe Slope

The City specifies a different minimum self-cleaning velocity, in feet per second (fps) for each of the three sewer systems in the City. In a sanitary only sewer maintain velocities above 2.5 fps; drainage system sewers as well as combined sewers are designed to achieve a minimum velocity of 3.0 fps.

When evaluating uniform flow conditions in an open channel use the following form of Manning's Equation to evaluate channel slope to achieve channel flow capacity: All variable were previously defined.

$$S_H = \left[\left(\frac{Q\, n_{ch}}{1.49\, A\, R_H^{\frac{2}{3}}} \right)^2 \right]$$

Equation 8.8 Manning's Equation – Open Channel Slope of Energy Grade Line

8.3.1 Critical Flow Calculations

When designing an open channel, calculating the critical depth of flow is important in order to determine if the flow will be subcritical or supercritical. If the flow is subcritical, flows are tranquil and wave action is minimal. In subcritical flow, a downstream control section influences the depth at any upstream point. In supercritical flow, an upstream control section influences the depth of flow at any downstream point. In addition, the flow has relatively shallow depth and high velocity.

If flow is subcritical, it is relatively easy to handle through careful design of channel transitions and junctions. If flow is supercritical, transitions in channel slope and shape can result in significant energy loss creating areas of turbulence and rapidly changing flow depths.

The Froude number, F_r, is useful for evaluating the type of flow conditions in a pipe or open channel. It is calculated using the Equation 8.9.

$$F_r = \frac{v}{\sqrt{\left(\frac{gA}{T}\right)}}$$

Where: F_r - Froude number v – Average flow velocity, fps

g – Gravity constant, ft/sec^2 A -Cross-sectional flow area, ft^2

T -Top width of water surface, ft

Equation 8.9 Froude Number

If F_r is greater than 1.0, flow is supercritical, if it is under 1.0, flow is subcritical and if the F_r is 1.0, critical flow conditions prevail.

Critical depth only depends upon the discharge rate and the channel geometry. The general equation for determining critical depth is expressed as:

$$\frac{Q^2}{g} = \frac{A^3}{T}$$

Where: Q – design discharge rate, cfs

Equation 8.10 Critical Depth

Solving this equation requires a trial and error method.

8.3.2 Hydraulic Ratios of a Standard Sections

Geometric elements of a circular conduit and prismoidal open channels (e.g. flow area, hydraulic radius, diameter, top width, etc.) are related to each other using the geometry of the section and the depth of flow. Numerous references have published tables and charts containing this information as they relate to each other as well as figures that can be used in flow calculations. Figure 8.1 is an example of a reference depicting the hydraulic rations for a circular conduit relating partially full flow properties to full pipe flow properties.

8.3.3 Hydraulic Grade Lines

All head losses in a closed pipe system are considered in computing the hydraulic grade line to determine water surface elevation at critical locations. Hydraulic control is a water surface elevation from which hydraulic calculations begin. If the control occurs at an upstream location, (i.e. inlet control) the beginning hydraulic grade line is this established water surface elevation minus the summation of the entrance loss plus the difference in

velocity head. If the control occurs at an outlet (i.e. outlet control), the beginning water surface is the hydraulic grade line in the outlet pipe.

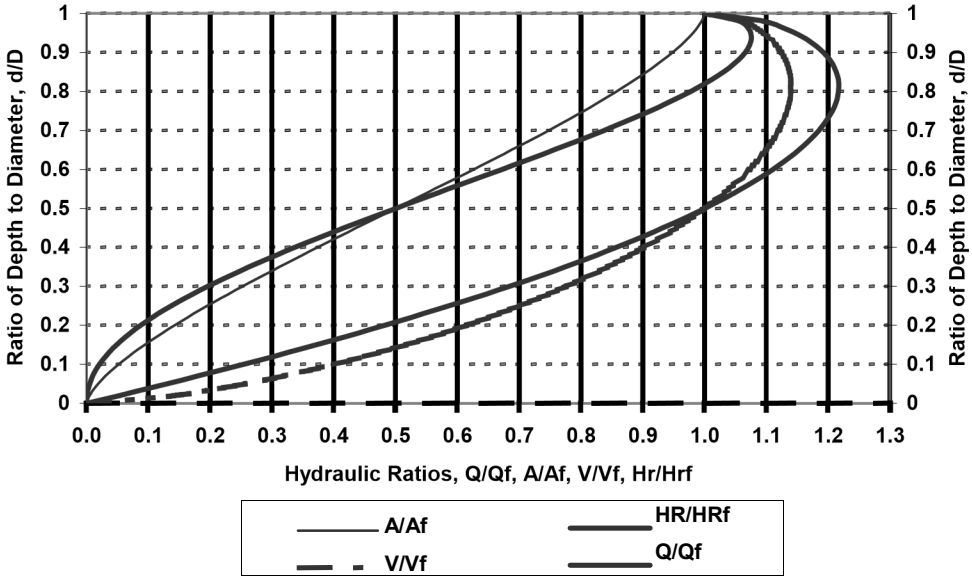

Figure 8.1 Geometric Properties of a Circular Section

8.4 Closed Conduits

Closed conduits serve as the primary means to transport wastewater and drainage flows collected from throughout the City's Service Area to disposal locations. The most widely used formula for determining the velocity of flow is the Manning's Friction Formula (Equation 8.1). In addition to the general form of this equation, it has been modified into other forms to calculate discharge capacity (Equation 8.2), friction losses (Equation 8.5) as well as other variables that affect operation and performance.

8.4.1 Closed Conduits - Design Criteria

The following criteria should be followed for closed pipe design:

- For ordinary conditions, most sewers should be sized on the assumption that they will flow full or practically full under the design discharge. Under specific condition, separated storm sewers and combined sewers are exempted from this standard. Refer to Chapter 6, Facility Classification or Chapter 7, Design Criteria for Surcharged Combined Sewers.
- The maximum hydraulic gradient should not produce a velocity that exceeds 15 fps. Facilities with flow exceeding this value could require additional design considerations to address rapid energy transfer and dynamic forces.
- The minimum desirable slope should ensure development of self-cleaning velocities that are a function of the sewer type.
- Sewers shall not be reduced in diameter when the slope in the downstream

section is increased.

- If a sewer is allowed to surcharge, the maximum water surface depth shall not exceed the lowest controlling elevation defined for the system.

8.4.2 Manning's n_{ch} Values for Closed Conduits

The City has selected one value for the Manning's friction coefficient that must be used when designing closed conduits for conveying wastewater or drainage flows. Table 8.1 lists the accepted value for a variety of material configurations.

Table 8.1 Manning's Roughness Coefficient "n" for Closed Conduits

Channel Type	Manning's n Values
Conduits – Sewers and Culverts	
All sewer pipe materials including: concrete, polyvinylchloride (PVC), high density polyethylene (HDPE) and Cast Iron	0.013
All concrete culverts including circular and irregular shapes	0.013

8.5 Open Channels

Open channels are an integral part of the City's sewer system. Examples include development sites utilizing open channel facilities for surface runoff, roadside drainage ditches and natural soil bottom, grass and riprap channels. When the hydraulic radius, cross-sectional area and roughness coefficient and slope are known, discharge can be calculated directly from Equation 8.2. The channel slope can be calculated using Equation 8.6 when the discharge, roughness coefficient, area and hydraulic radius are known.

8.5.1 Design Criteria

The following criteria should be followed for open channel design:

- Channel slopes are dictated by site design constraints. Channel gradients greater than 2% may require the use of flexible linings to maintain stability. Most flexible lining materials are suitable for protecting gradients up to 10% with the exception of some vegetation types. Linings, such as riprap and gabions are more suitable for protecting very steep channels with gradients greater than 10%.
- Channel side slopes shall be stable throughout the entire length and side slope shall depend on the channel materials. A maximum of 2:1 should be used for the channel side slope, unless otherwise justified by calculations or local conditions. Roadside ditches should have a maximum side slope of 3:1. If safety is a concern channel side slopes should be 4:1 or flatter.
- Trapezoidal and parabolic cross sections are preferred over triangular sections. For vegetative channels, design stability should be determined using low vegetative retardance conditions (e.g. Class D) and for design capacity higher vegetative retardance conditions (e.g. Class C). Refer to Table 8.6 for guidance designing vegetative channels.
- For vegetative channels, flow velocities within the channel should not exceed the maximum permissible velocities listed in Tables 8.2 and 8.3.

- If channel relocation is unavoidable, the cross-sectional shape, meander pattern, roughness, sediment transport, and slope should conform to the existing conditions as much as practicable. Some means of energy dissipation may be necessary when existing conditions cannot be duplicated.
- Streambank stabilization should be provided when appropriate, because of any stream disturbance and should include both upstream and downstream banks as well as the local site.
- Open channels systems should be sized to handle a 25-year design storm.
- Include freeboard when designing open channel depths. Generally, provide 6- to 12-inches of depth above the design flow elevation. Evaluate the consequence of overtopping the channel when specifying channel freeboard. Consider the character flow (i.e. flow depth, waves, splashing etc.) to establish freeboard.

When applicable, route the 100-year design storm through a channel system to determine flood depths for siting building elevations Contact the Bureau of Development Services for information about streams with defined floodplains and their associated regulations. Refer to Chapter 1, Useful Contacts within the City.

8.5.2 Channel Classification

Open channels are classified according to their lining type used to line the channel bottom and sides. There are three main classifications: vegetated, flexible and rigid. Vegetated linings include grass with mulch, sod and wetland channels. Flexible linings include riprap and some forms of man-made linings including gabions, while rigid linings generally involve concrete or rigid block

Vegetative linings, where practical, are the most desirable lining for an artificial channel. It stabilizes the channel body, consolidates soil mass of the bed, checks erosion on channel surface, and provides habitat and water quality benefits. Conditions when vegetation may not be acceptable include but are not limited to:

- High flow velocities
- Standing or continuously flowing water
- Lack of maintenance to prevent growth of tall or woody vegetation
- Lack of nutrients to sustain vegetation and inadequate soil substrate
- Excessive shade

Proper seeding, mulching and soil preparation are required during construction to assure establishment of healthy vegetation.

Flexible linings such as rock riprap, including rubble, are the most common type of flexible lining for channels. It presents a rough surface that can dissipate energy and mitigate increases in erosive velocity. These linings are usually less expensive than rigid linings and have self-healing qualities that reduce maintenance. However, they may require the use of filter fabric depending on the underlying soils, and the growth of grass and weeds may present maintenance problems.

Rigid linings are generally constructed of concrete and used where high flow velocity is required. Higher velocities however, create potential for scour at channel lining transitions and channel headcutting.

8.5.3 Velocity Limitations

The design of an open channel should be consistent with the velocity limitations for the selected channel lining. Seeding and mulch should only be used when the design value does not exceed the allowable value for bare soil. Vegetated channels used for stormwater pollution reduction purposes must meet SWMM flow velocity limitations to prevent re-suspension of pollutants. Velocity limitations for various linings are listed in Tables 8.2 and 8.3. Vegetative lining calculation procedures are presented in Chapter 8, Vegetative Design and riprap procedures are found in Chapter 8, Flexible Channel Design.

Table 8.2 Maximum Velocities for Comparing Lining Materials

Material	Maximum Velocity (fps)
Sand	2.0
Silt	3.5
Firm Loam	3.5
Fine gravel	5.0
Stiff Clay Graded Loam or Silt to Cobbles	5.0
Coarse Gravel	5.0
Hard Pan	6.0

Source: AASHTO Model Drainage Manual, 1991

Table 8.3 Maximum Velocities for Vegetative Channel Linings

Vegetative Type	Slope Range (%)[1]	Maximum Velocity[2] (fps)
Bermuda grass	0 to 10	5
Tall Fescue grass mixtures	0 to 10	4
Kentucky bluegrass	0 to 5	6
Grass mixture	0 t0 5	4
Annual[3] Sod	0 to 5	3
	---	4

1. Do not use on slopes steeper than 10% except for a side slope in a combination channel
2. Use velocities exceeding 5 fps only where good stands can be maintained
3. Annuals use on mild slopes or as a temporary protection until permanent covers are established. Source: Manual for Erosion and Sediment Control in Georgia, 1996

8.5.4 Manning's n_{ch} Values for Channels

The Manning's n_{ch} value is an important variable in channel flow computations. This variable can significantly affect discharge, depth and velocity estimates. The depth of flow in a channel of given geometry and longitudinal slope is primarily a function of the channel resistance to flow or roughness. This depth is called the normal depth and is computed from the Manning's Friction Formula (Equation 8.1). Since Manning's n_{ch} values depend on many different physical characteristics, care and good engineering judgment must be exercised in the selection process.

Table 8.4 lists values for a variety of channel types and material configurations.

Table 8.4 Manning's Roughness Coefficient "n_{ch}" for Channels

Channel Type	Manning's n Values
Open Channels – Natural	
Minor stream on plain (top width at flood stage < 100 feet)	
Clean straight, full stage, no pools	0.030
Same as above but more stones and weeds	0.035
Clean, winding, some pools and shallows	0.040
Same as above but some weeds and stones	0.045
Same as above, lower stages, more ineffective slopes and sections	0.048
Same as above but more stones	0.050
Sluggish reaches, dense vegetation, weedy, deep pools	0.070
Very sluggish, weedy, deep pools or floodways with heavy stand of timber or underbrush	0.100
Upland channels, no vegetation in channel, banks usually steep, trees and brush along banks	
Gravel bottom	0.025
Same as above but more cobbles and boulders	0.040
Earth bottom, clean	0.020
Same as above but more debris and litter	0.030
Open Channels – Excavated or Dredged	
Earth, straight, uniform clean, recently completed	
Same as above but clean, recently completed	0.018
Same as above after weathering	0.020
Same as above but short grass, few weeds	0.027
Earth, winding and sluggish	
Same as above no vegetation	0.025
Same as above but grass and some weed	0.030
Same as above but dense weeds in deep channels	0.035
Same as above but earth bottom and rubble sides	0.030
Same as above but stony bottom an weedy banks	0.035
Same as above but cobble bottom and clean sides	0.040
Gravel, straight, uniform section, clean	0.025
Unmaintained, clean bottom, brush on side slopes	0.050
Same as above highest flow stage	0.070
Unmaintained, dense weeds as high as flow depth	0.080

Unmaintained, dense brush, high stages	0.100

Lined Channels

Table 8.5 provides a tabulation of Manning's n values for various lined channel configurations and depths of flow.

Table 8.5 Manning's Roughness Coefficient "n_{ch}" for Lined Channels

Lining Category	Type	Manning's n_{ch} values for given flow depth ranges		
		0-0.5 ft	0.6 – 2.0 ft	>2.1 ft
Rigid	Concrete	0.015	0.013	0.013
	Grouted rip rap	0.015	0.013	0.013
	Stone masonry	0.040	0.030	0.028
	Soil cement	0.042	0.032	0.030
	Asphalt	0.025	0.022	0.020
Unlined	Bare soil	0.018	0.016	0.016
	Rock cut	0.023	0.020	0.020
Temporary*	Woven Paper net	0.045	0.035	0.025
	Jute net	0.016	0.015	0.015
	Fiberglass roving	0.028	0.022	0.019
	Straw with net	0.028	0.021	0.019
	Curled wood mat	0.065	0.033	0.025
	Synthetic mat	0.066	0.035	0.020
Gravel/Riprap	1-inch D_{50}	0.036	0.025	0.021
	2-inch D_{50}	0.044	0.033	0.030
	6-inch D_{50}	0.066	0.041	0.034
	12-inch D_{50}	0.104	0.069	0.035

Note: Values listed are representative values for the represented depth ranges. Manning's roughness coefficients vary with flow depth. Reference: HEC-15, 1988

Vegetative Channels

Manning's roughness coefficients for vegetative and other linings vary significantly depending on the amount of submergence. The classification of vegetal covers by degree of retardance is provided in Table 8.6.

Equation 8.11 is a general relationship for calculating a Manning's n value for lined channel using the vegetation type and amount of retardance each vegetation type provides. Table 8.7 lists a Coefficient of Retardance for each retardance class.

$$n_{ch} = \left[\frac{1.22\, R_H^{\frac{1}{6}}}{C_{RC} + 19.97 \log R_H \times S_H^{1.4}} \right]^{0.4}$$

Where: R_H – Hydraulic Radius
S_H – Channel Slope, ft/ft
C_{RC} – Retardance Class Coefficient, Table 8.7

Equation 8.11 Manning's nch Relationships for Vegetal Degree of Retardance

Table 8.6 Classification of Vegetative Cover as related to the Degree of Retardance[1]

Retardance	Cover Type[2]	Condition
A	Weeping love grass Yellow blue stem Ischaemum	Excellent stand, tall, average 2.5-feet Excellent stand, tall, average 3-feet
B	Kudzu Bermuda grass Native grass mixture (little bluestem, bluestem, blue gamma and other long and short Midwest grasses) Weeping love grass Lespedeza sericea Alfalfa Weeping love grass Blue gamma	Dense or very dense growth, uncut Good stand, tall, average 1-foot Good stand unmowed Good stand unmowed Good stand, tall, average, 2-feet Good stand, not woody, average, 1.6-feet Good stand, tall, average, 1-foot Good stand, unmowed, average 1-foot Good stand, uncut, average 1-foot
C	Crab grass Bermuda grass Grass legume mixture-summer (orchard grass, redtop Italian ryegrass and Common lespedeza) Centipede grass Kentucky bluegrass	Fair stand, uncut, average 0.8- to 4-feet Good stand, mowed, average 0.5-feet Very dense cover, average 0.5-feet Good stand, headed, average 0.5 to 1-foot
D	Bermuda grass Common lespedeza Buffalo grass Grass-legume mixture Fall, spring (orchard grass, redtop, Italian ryegrass, and common lespedeza) Lespedeza sericea	Good stand, cut to 0.6 feet Excellent stand, uncut, average 0.4-feet Good stand, uncut, average 0.3- to 0.5-feet Good stand, uncut, 0.3- to 0.4-feet Good stand Before cutting After cutting to 2"

E	Bermuda grass Bermuda grass	Good stubble, cut to 1 1/2 –inches Burned stubble

Notes:

1. Values listed are representative values for the represented depth ranges. Manning's roughness coefficients vary with flow depth. Reference: HEC-15, 1988
2. The City of Portland does not approve all plants listed in this reference table. Refer to the Portland Plant List Adopted by the City Council, effective December 13, 1991 and Amended March 23, 2004, for all approved plantings.

Table 8.7 Retardance Class Coefficients for Equation 8.11

Flow Retardance Class	Retardance Class Coefficients (C_{RC})
A	30.2
B	37.4
C	44.6
D	49.0
E	52.1

Note: Equations are valid for flows less than 50 cfs.

8.5.5 Stable Channel Design

HEC-15 provides a detailed presentation of stable channel design related to the design of open channels. This section provides a brief summary of the significant concepts.

The procedures for stable channel design provide a means of evaluating and defining channel configuration that will perform within acceptable limits of stability. For many drainage channels, bank instability and lateral migration cannot be tolerated. Stability is achieved when the material forming the channel boundary effectively resists the erosive forces of the flow. Principles of rigid boundary hydraulics can be applied to evaluate this type of system.

Both velocity and tractive force methods have been applied to the determination of channel stability. Permissible velocity procedures are empirical in nature and have been used to design numerous channels in the US and the world. However, the tractive force method considers the actual physical processes occurring at the channel boundary and represent a more realistic model of the detachment and erosion process.

The hydrodynamic force created by water flowing in a channel cause shear stress on the channel bottom. The bed material, in turn, resists the shear stress by developing a tractive force. Tractive force theory states that the flow-induced shear stress should not produce a force greater than the tractive resistive force of the bed material. This tractive resisting force of the bed material creates the permissible or critical shear stress of the bed material. In a uniform flow, the shear stress is equal to the effective component of the gravitational force acting on the body of water parallel to the channel bottom. The average shear is equal to:

$$\tau = \gamma R_H S$$

Where: | = Average shear stress, lb/ft^2

© = Unit weight of water, 62.4 lb/ft^3

R_H = Hydraulic radius, ft

S = Average channel slope, ft/ft

Equation 8.12 Average Channel Shear Stress

The maximum shear stress for a straight channel occurs on the channel bed and is less than or equal to the shear stress at maximum depth. The maximum shear stress is computed as follows:

$$\tau_d = \gamma d S$$

Where: $|_d$ = maximum shear stress, lb/ft^2

γ = Unit weight of water, pounds per cubic foot

d = maximum depth of flow, ft

S = Average channel slope, ft/ft

Equation 8.13 Maximum Channel Shear Stress

Shear stress in channels is not uniformly distributed along the wetted perimeter of the channel. A typical distribution of shear stress in a trapezoidal channel tends toward zero at the corners with the maximum on the bed of the channel at its centerline, and the maximum for the side slopes occurs around the lower third of the side slope.

For trapezoidal channels lined with riprap or gravel and having side slopes steeper than 3: 1, slope stability must also be considered. This analysis, which is outside the scope of this Manual, requires comparison of the tractive force ratio between the side slopes and the channel bottom with the ration of shear stresses exerted on the channel side and bottom.

The permissible or critical shear stress in a channel defines the force required to initiate movement of the channel bed or lining material. Table 8.8 presents the permissible shear stress values for manufactured vegetative and riprap channel lining. The permissible shear stress values for non-cohesive soils are a function of the mean diameter of the channel material. For larger stone sizes including rock riprap, Equation 8.14 gives the permissible shear stress.

$$\tau_p = K\ D_{p\ 50}$$

Where: τ_p = permissible shear stress, lb/ft^2
D_{50} = mean riprap size, ft
K_p = Conversion constant = 4.0

Equation 8.14 Riprap Permissible Shear Stress

For cohesive material, the plasticity index provides a good guide for determining the permissible shear stress.

Table 8.8 Permissible Unit Shear Stresses for Lining Materials

Lining Category	Type	Permissible Unit Shear Stress (lbs/ft^2)
Temporary*	Woven Paper net	0.15
	Jute net	0.45
	Fiberglass roving	
	Single	0.60
	Double	0.85
	Straw with net	1.45
	Curled wood mat	1.55
	Synthetic mat	2.00
Vegetative	Class A	3.70
	Class B	2.10
	Class C	1.00
	Class D	0.60
	Class E	0.35
Gravel Riprap	1-inch D_{50}	0.33
	2-inch D_{50}	0.67
Rock Riprap	6-inch D_{50}	2.00
	12-inch D_{50}	4.00

Note: Values listed are representative values for the represented depth ranges. Manning's roughness coefficients vary with flow depth. Reference: HEC-15, 1988

8.5.6 Vegetative Design

A two-part procedure is recommended for design of temporary and vegetative channel

linings. Part 1, the design stability component, involves determining channel dimensions for low vegetative retardance conditions using Class D as defined in Table 8.6.

Part 2, the design capacity component, involves determining the flow depth increase necessary to maintain capacity for higher vegetative retardance conditions, using Class C

(Refer to Table 8.6). If temporary lining is to be used during construction, vegetative retardance Class E should be used for the design stability calculations.

Do not use this procedure if the slope exceeds 1% or a combination of lining materials will be used.

8.5.7 Design Procedures

Stability – Use the following steps for stability calculations

1) Determine design variables, including discharge Q, bottom slope S_H cross section parameters and vegetation type.
2) Using Table 8.3 assign a maximum velocity, v_{max} based on vegetation and slope.
3) Assume a value of n_{ch} and determine the corresponding value of vR from the n versus vR curves in Figure 8.2. Use retardance Class D for permanent vegetation and E for temporary construction.
4) Calculate the hydraulic radius using the equation:

$$R_H = \frac{(vR_H)}{v_{max}}$$

Where: R_H – Hydraulic radius, ft
VR_H – value obtained from Figure 8.2
v_{max} – maximum velocity from step 2, fps

Equation 8.15 Stability Analysis – Step 4

5) Use the following form of Manning's equation to calculate the value of vR_H

$$vR_H = \frac{\left(1.49\, R_H^{\frac{5}{3}} \sqrt{S}\right)}{n_{ch}}$$

Where: S – channel bottom slope, ft/ft
n_{ch} – Manning's n value assumed in step 3

Equation 8.16 Stability Analysis - Step 5

6) Compare the vR_H product value obtained in step 5 to the value obtained from Figure 8.2 for the assumed n value in step 3. If the values are not reasonably close, return to step 3 and repeat the calculations using the new assumed n_{ch} value.
7) Determine the depth of flow using a trial and error procedure.

8) If bends are considered, calculate the length of downstream protection, L_p for the bend, using the following equation. Provide additional protection, such as gravel, reinforced soil lifts, bioengineered treatments or riprap in the bend and extending downstream for a length L_p.

$$L_P = 0.604 \left(\frac{R_H}{n_b} \right)^{1/6}$$

Where: n_b = Manning's roughness coefficient in the bend
R_H = Hydraulic radius, feet
L_p = Protection length, feet

Equation 8.17 Stability Analysis - Step 8

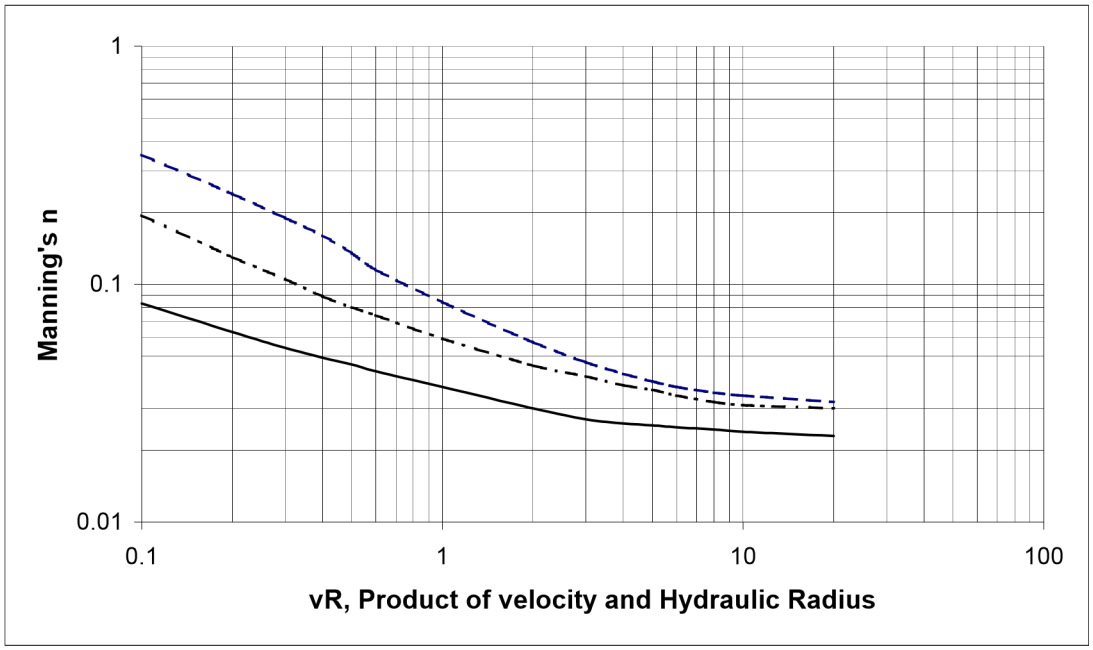

Figure 8.2 Manning's n_{ch} Value As A Function Of Vegetative Flow Retardance

Capacity - Use the following steps for design capacity calculations

1) Assume a depth of flow greater than the value from step 7 above and compute the waterway area and hydraulic radius.
2) Divide the design flow rate, obtained from procedures obtained in Chapter 6-Hydrologic Analysis for Drainage Facility Design, by the waterway area from step 1 to find the velocity.
3) Multiply the velocity from step 2 by the hydraulic radius from step 1 to find the value of vR_H.

4) Use Figure 8.2 to find Manning's n_{ch} value for retardance Class C based on the vR_H value from step 3.
5) Use Manning's Equation to find the velocity using the hydraulic radius from step 1, Manning's n_{ch} value from step 4 and appropriate bottom slope.
6) Compare the velocity values from steps 2 and 5. If the values are not reasonably close, return to step 1 and repeat the calculations.
7) Add an appropriate freeboard to the final depth from step 6. Generally, 6-inches to 12 –inches is adequate. Add freeboard consistent with the calculated depth of flow and level of failure risk. Add additional freeboard generally, 20% of □d to account for change in depth due to bends.
8) If bends are considered, calculate super elevation of the water surface profile at the bend using the Equation 8.23.

8.5.8 Flexible Channel Lining (Riprap) Design

The following procedure is based on results and analysis of laboratory and field data (Maynord, 1987, Reese, 1984, Reese, 1988). This procedure applies to riprap placement in both natural and prismatic channels and has the following assumptions and limitations:

- Minimum riprap thickness equal to d_{100}
- The value of d_{85}/d_{15} less than 4.6
- Froude number less than 1.2
- Side slopes up to 2:1
- A safety factor of 1.2
- Maximum velocity less than 15 fps
- Specific weight of stone is 165 pounds per cubic foot.

This procedure is not applicable, if significant turbulence is caused by boundary irregularities, such as obstructions or structures.

Design Procedure

Step 1 - Determine the average velocity in the main channel for the design condition. Manning's n values for riprap can be calculated from the equation:

$$n = 0.0395 \left(d_{50}\right)^{1/6}$$

where: n = Manning's roughness coefficient for stone riprap d_{50} = diameter of stone for which 50%, by weight, of the gradation is finer(ft)

Equation 8.18 Manning's n Factor for Riprap

Step 2 - If the rock is to be placed at the outside of a bend, multiply the velocity determined in Step 1 by the bend correction coefficient, C_b (Maynord, 1987) using one of the following equations for either a natural or a prismatic channel. This requires determining the top width, T, upstream from a bend and the centerline bend radius, R_b

$$C_b = 1.80 \left(\frac{R_b}{T} \right)^{-0.161099}$$

Equation 8.19 Natural Channel Velocity Correction Coefficient for Bends

$$C_b = 1.65 \left(\frac{R_b}{T} \right)^{-0.251239}$$

Equation 8.20 Prismatic Channel Velocity Correction Coefficient for Bends

Step 3 - Determine the required minimum d_{30} value from the equation:

$$\frac{d_{30}}{D} = 0.193\, F_{r2.5}$$

Where: d_{30} = stone diameter for which 30%, by weight, of the gradation is finer (ft)
D = depth of flow above stone, feet
F_r = Froude number, see Equation 8.9
V = mean velocity above the storm, feet per second g
= gravity constant

Equation 8.21 d_{30} Riprap Sizing

Step 4 – Determine available riprap gradations. A well-graded riprap is preferable to uniform size. The diameter of the largest stone, d_{100}, should no be more than 1.5 times the d_{50} size. Blanket thickness should be greater than or equal to d_{100} except as noted below. Sufficient fines (below d_{15}) should be available to fill the voids in the larger rock sizes. The stone weight for a selected stone size can be calculated by the equation

$$W = 0.5236\, S\, W\, d_s^{\,3}$$

Where W = Stone weight, pounds
D = selected stone diameter, feet
SW_s = specific weight of stone, pound per cubic foot

Equation 8.22 Riprap Stone Weight

Flow in Bends

Flow around a bend in an open channel induces centrifugal forces because of the change in flow direction. This creates superelevation of the water surface at the outside of bends and can cause water to splash over the side of the channel if adequate freeboard is not provided. This superelevation can be estimated by the following equation:

$$\Delta d = \frac{V T^2}{R_c \, g}$$

Where:

□d - difference in water surface elevation between the inner and outer banks of the channel bend, ft
V - Average channel velocity, fps T - Surface width of channel, ft g - gravitational acceleration, ft/s^2 R_c - Radius of centerline of the channel, ft

Equation 8.23 Water Surface Elevation Change in Bends

Equation 8.23 is valid for subcritical flow conditions. The elevation of the water surface at the outer channel bank will be □d/2 higher than the centerline water surface elevation (the average water surface elevation immediately before the bend) and the elevation of the water surface at the inner channel bank will be □d/2 lower than the centerline water surface elevation. Flow around a bend imposes higher shear stress on the channel bottom and sides.

8.6 Outlet Structures

8.6.1 General

Primary and secondary outlets provide a critical function of the regulation of flow for structural facilities. There are several different types of outlets. Some consist of a single stage outlet structure, where others combine several outlet structures to provide multistage outlet control.

For a single stage system, a facility can be designed as a simple pipe or culvert. For multi-stage control, the inlet is designed considering a range of design flows.

A stage-discharge curve is developed for the full range of flows that a structure would experience. The outlets are housed in a riser structure connected to a single outlet conduit. An alternate approach would be to provide several pipe or culvert outlets at different elevations in a facility that are either discharged separately or are combined to discharge to a single location.

8.6.2 Outlet Structure Types

There are a wide variety of outlet structure types, the most common are covered in the section. Descriptions and equations are provided for the following outlet types for use in a variety of facility types used to control flow.

- Orifices
- Broad-crested weirs

- Perforated risers
- Pipes/Culverts
- Sharp crested weirs
- V-notched weirs
- Proportional weirs
- Combination outlets

Each of these outlet types has a different design purpose and application:

- Water quality and channel protection flows are normally handled with smaller, more protected outlet structures such as reverse slope pipes, hooded orifices, orifices located with screened pipes or risers, perforated plates or risers and Vnotched weirs.
- Larger flows, such as those related to extreme flood flows and those causing over bank flow conditions, are typically handled using one of the following three outlet types:
  1. A riser with different sized openings.
  2. An overflow at the top of the riser (i.e. drop inlet structure).
  3. A broad crested weir or spillway.

Overflow weirs of different heights and configurations can also be designed to handle the control of multiple design flows.

8.6.3 Orifices

An orifice is a circular or rectangular opening of a prescribed shape and size. The flow rate depends on the height of water above the opening and the size and edge treatment of the orifice

For a single orifice, the orifice discharge can be determined using the standard orifice equation:

$$Q = CA\sqrt{2gH}$$

Where: Q – orifice flow discharge, cfs

C – discharge coefficient
Sharp edge – 0.60 – 0.80
Rounded edge – 0.92
A – cross-sectional area of orifice or pipe, ft^2
g – gravitational constant d – diameter of orifice or pipe, ft
H – effective head on the orifice, measured from the center of the orifice

Equation 8.24 Orifice

If the orifice discharges as a free outfall, then the effective head is measured form the center of the orifice to the upstream water surface elevation. If the orifice is submerged, then the effective head is the difference in the elevation of the headwater and tailwater surfaces.

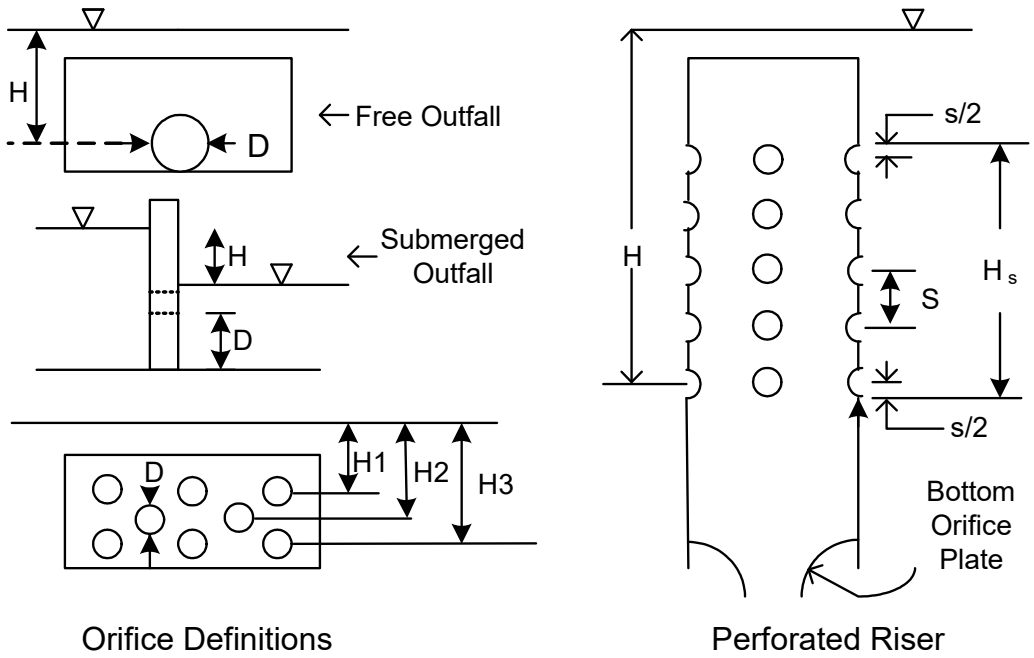

Figure 8.3 Typical Orifice Configurations and Definitions

8.6.4 Perforated Risers

A special kind of orifice flow is a perforated riser as illustrated above. In a perforated riser, an orifice plate at the bottom of the riser, in the outlet pipe just downstream or in another location, controls the flow. It is important that the perforations on the riser convey more flow than the orifice plate so as not to become the control. Referring to Figure 8.3 a shortcut formula has been developed to estimate the total flow capacity of the perforated section (McEnroe, 1988):

$$Q = C_p \frac{2A_p}{3H_s} \sqrt{2g}\, H^{\frac{3}{2}}$$

Where:

Q – discharge, cfs

C_p – discharge coefficient for perforations (Typically = 0.60)

A_p – cross-sectional area of all of the holes, ft^2

H_s – distance from S/2 below the lowest row to S/2 above the top row, ft

Equation 8.25 Perforated Riser Pipe

8.6.5 Pipe and Culverts

Discharge pipes are often used as an outlet structure for flow management facilities. The design of these pipes can be used for either single or multi-stage discharges. A reverse-slope underwater pipe is often used for water quality or channel protection outlets.

Pipes smaller than 12-inches in diameter may be analyzed as a submerged orifice as long as H/D is greater than 1.5. Note: for low flow conditions when the flow reaches and begins to overflow the pipe, weir flow controls. As the stage increases, the flow will transition to orifice flow.

Pipes greater than 12-inches in diameter should be analyzed as a discharge pipe with headwater and tailwater effects taken into account. The outlet hydraulics for pipe flow can be determined from the methods and procedures provided in Appendix J Culverts.

8.6.6 Sharp-Crested Weir

If the overflow portion of a weir has a sharp, thin leading edge such that the water springs clear as it overflows, the overflow is termed a sharp-edged weir. If the sides of the weir also cause the through flow to contract, it is called an end-contracted sharpcrested weir. Sharp-crested weirs have stable stage-discharge relations and are often used as a measuring device. A sharp-crested weir with no end contractions is illustrated in Figure 8.4(a) below. The discharge equation for this configuration is (Chow, 1959):

$$Q = \left[3.27 + 0.4\left(\frac{H}{H_{ch}}\right)\right](L - 0.2H)^{\frac{3}{2}}$$

Where:
- Q – discharge, cfs
- H – head above weir crest excluding velocity head, ft
- H_{ch} – Height of weir above channel bottom, ft
- L – Horizontal weir length, ft

Equation 8.26 Sharp Crested Weir – Without End Contractions

A sharp-crested weir with end contractions is illustrated in Figure 8.4(b). Equation 8.27 is the discharge equation for this configuration (Chow, 1959):

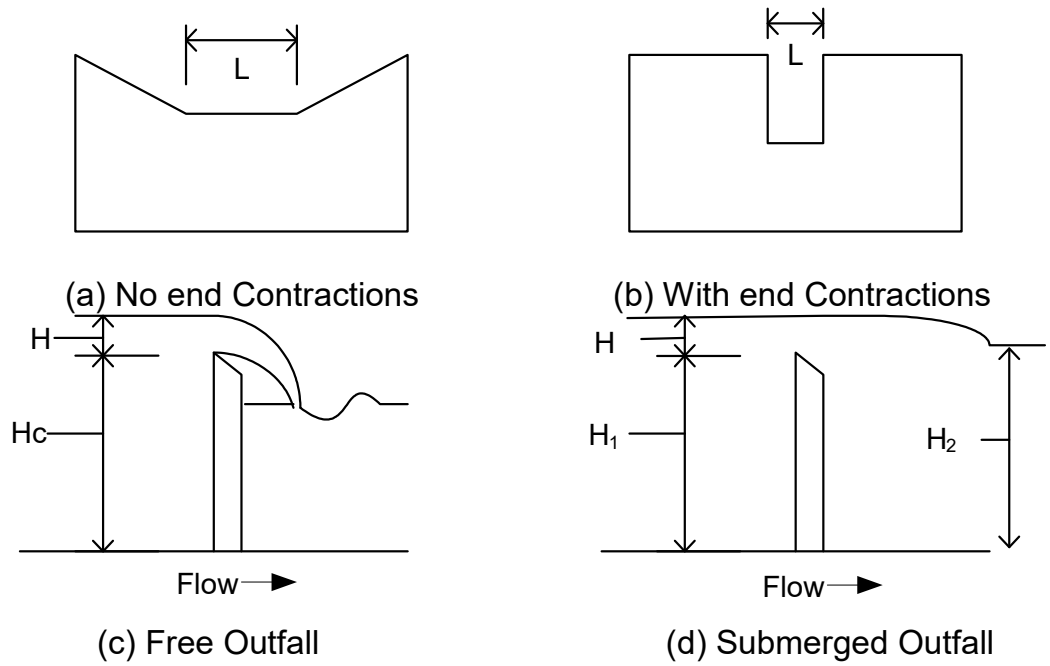

Figure 8.4 Sharp Crested Weir Definitions

$$Q = \left[3.27 + 0.4\left(\frac{H}{H_{ch}}\right)\right] L H^{3/2} \left(L - .0.2H - H\right)$$

Equation 8.27 Sharp Crested Weir - With End Contractions

A sharp-crested weir will be affected by submergence when the tailwater rises above the weir crest elevation. The result will be that the discharge over the weir will be reduced. This condition is illustrated in Figure 8.4(d). The discharge equation for a sharp-crested submerged weir is (Brater and King, 1976):

$$Q_s = Q_f \left[1 - \left(\frac{H_2}{H_1} \right)^{3/2} \right]^{0.385}$$

Equation 8.28 Submerged Sharp Crested Weir

Where:
Q_s – submergence flow, cfs
Q_f – free flow, cfs
H_1 – Upstream head above crest, ft
H_2 – Downstream head above crest, ft

8.6.7 Broad-crested Weirs

A weir in the form of a relatively long, raised channel control section is a broad crested weir. The flow control section can have different shapes such as triangular or circular.

True broad-crested weir flow occurs when the upstream head above the crest is between the limits of about 1/20 and 1/2 of the crest length , b, in the direction of flow. For example, a thick wall or a flat stop log can act like a sharp-crested weir when the approach head is large enough that the flow springs from the upstream corner. If the upstream head is small enough relative to the top profile length, the stop log can act like a broad-crested weir (USBR, 1997)

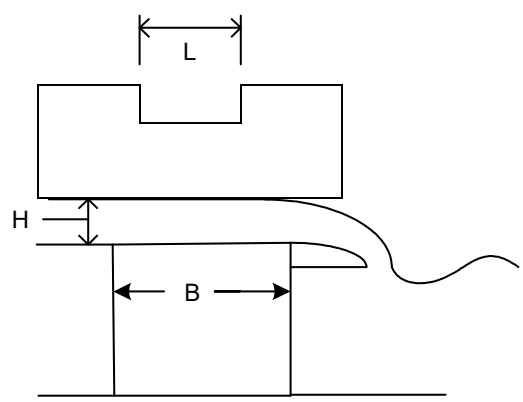

Figure 8.5 Broad Crested Weir Definitions

The equation for the broad-crested weir is (Brater and King, 1976)

$$Q = CLH^{\frac{3}{2}}$$

Where:
Q – discharge, cfs
C – broad-crested weir coefficient (normally varies from 2.6 to 3.1)
L – weir length perpendicular to flow, ft
H – head above weir crest, ft

Equation 8.29 Broad Crested Weir

The broad-crested crest shape and length parallel to the flow influence the value of the weir coefficient. A smooth rounded crest increases friction and head loss and corresponds to a maximum coefficient of 3.1. Sharp corners improve flow efficiency and correspond to a minimum coefficient of 2.6.

8.6.8 V-Notched Weir

The discharge through a V-notched weir can be calculated from the following equation (Brater and King, 1976).

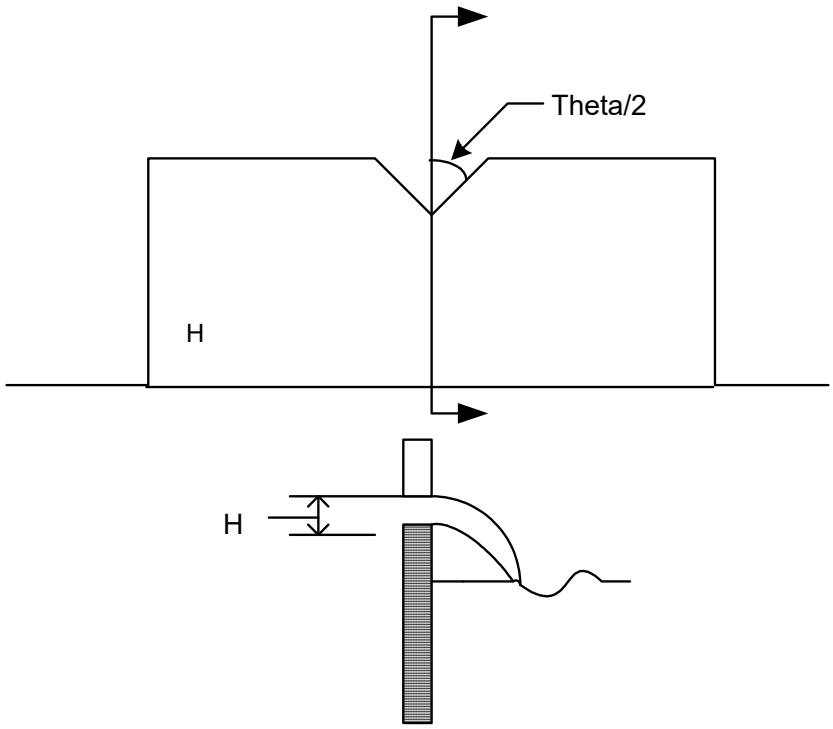

Figure 8.6 V-notched Weir Dimensions

$$Q = 2.5\tan\left(\frac{\theta}{2}\right)H^{\frac{5}{2}}$$

Where: Q – discharge, cfs
- Theta, angle of V-notch, degrees
H – head on apex of notch, ft

Equation 8.30 V-Notched Weir

8.6.9 Proportional Weirs

Although it is more complex to design and construct, a proportional weir may significantly reduce the required storage volume for a given site. The proportional weir is distinguished from the other control devices by having a linear head-discharge relationship achieved by allowing the discharge area to vary non-linearly with head. A typical proportional weir is illustrated below. Design equations for proportional weirs are (Sandvik, 1985)

$$Q = 4.97\sqrt{a}\, b\, H\left(\frac{a}{3}\right)$$

$$\frac{x}{b} = 1 - (.32)\left(\arctan\sqrt{\frac{y}{a}}\right)$$

Where: Q – discharge, cfs
Dimensions a, b, H, x and y are shown in Figure 8.7.

Equation 8.31 Proportional Weir

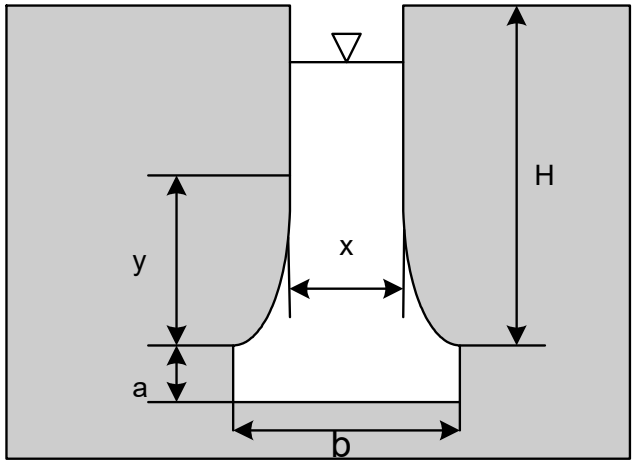

Figure 8.7 Proportional Weir Dimensions

8.6.10 Combination Outlets

Combinations of orifices, weirs and pipes can be used to provide a multi-stage outlet control for different storage volumes within a storage facility.

There are generally two types of combination outlets: shared outlet control structures and separate outlet controls. Selection depends on various factors including the character of flow, design objective (water quality, channel protection, basement flooding relief), location and operation and maintenance considerations. Shared outlet control is typically achieved by designing a number of individual outlet openings (i.e. orifices, weirs or drops) at different elevations on a riser pipe which all flow to a common larger conduit, pipe or receiving water body.

Separate outlet controls are less common and may consist of several pipe or conduit outlets at different levels in a storage facility that either discharge separately or are combined to discharge at a single location.

The use of a combination outlet requires the construction of a composite stage discharge curve suitable for control of multiple storm flows.

A designer may be creative to achieve the most economical and hydraulically efficient outlet design possible in designing a multi-stage outlet. Many iterations are usually required to arrive at a minimum structure size and storage volume that achieve proper control. The stage-discharge table or rating curve is a composite of the different outlets used for different elevations within the multi-stage riser.

8.6.11 Clogging Potential for Small Diameter Orifices

Small diameter orifices can easily clog, preventing a facility from meeting its design purpose and potentially causing adverse impacts. Therefore, BES requires flow control orifices to be a minimum of 2-inches in diameter. Even these minimum-sized orifices are

subject to clogging and need to be protected. There are a number of different anticlogging designs, including:

- The use of a reverse slope pipe attached to a riser for a stormwater pond or wetland with a permanent pool. The pipe inlet is submerged 1 foot below the elevation of the permanent pool to prevent floatables from clogging the pipe and avoid the discharge of warmer water at the surface of the pond.
- A hooded outlet installed on the outlet of a facility with a permanent pool.
- Internal orifice protection using an over-perforated vertical standpipe with 1/2inch orifices or slots that are protected by wire cloth and a stone filled filtering jacket.
- Use an adjustable gate valve to achieve an equivalent orifice diameter.

8.7 Secondary Outlets

The purpose of a secondary outlet is to provide a controlled overflow path when flow exceeds the maximum design storm for a conveyance system or storage facility. In many cases, a facility does not warrant elaborate study to determine spillway capacity. Instead, it requires identifying the path water will follow when capacity is exceeded and assure safety and health impacts are effectively managed and minimized. Evaluating the risk of failure and determining the potential impact resulting from failure when homes, transportation facilities and health could be impacted are factors that would make analysis and design of secondary overflow channels a significant design issue.

8.8 Trash Racks and Safety Grates

Trash racks and safety grates are a critical element of outlet design and serve several important functions:

- Keeping debris away from the entrance to an outlet to prevent clogging
- Capturing debris to provide a means for relatively easy removal
- Ensuring that people and large animals are kept out of confined conveyance systems
- Providing a safety system that prevents anyone from being drawn into the outlet and allows a safe exit

When properly designed, trash racks serve these purposes without interfering significantly with the hydraulic capacity of the outlet or inlet in the case of conveyance structures (ASCE, 1985; Allred-Coonrod, 1991). The location and size of the trash rack depends on a number of factors, including head losses through the rack, structural convenience, safety and size of outlet.

The inclined vertical rack is most effective for lower stage outlets. Debris will ride up the trash rack as water levels rise; allowing for the removal of accumulated debris with a rake while standing on the top of the structure.

8.8.1 Trash Rack Design

A trash rack must be large enough such that partial plugging will not adversely restrict flow reaching the outlet control or conveyance inlet. A commonly used “rule-of-thumb” is to have the trash rack area at least ten times larger than the control outlet size or inlet.

The surface of all trash racks should be maximized and located a suitable distance from the entrance to avoid interference with the hydraulic capacity. Spacing of the trash rack bars must be proportional to the size of the smallest opening. However, where a small orifice is provided a separate trash rack for that outlet should be use.

Provide a trash rack with hinged connections to facilitate removal of accumulated debris and sediment from around the structure. Avoid bolting or setting the rack in concrete. Depressing the ground surface or entrance area upstream of the inlet are methods to provide sediment storage near the entrance of the trash rack. Trash racks at entrances to pipes should be sloped at 3H: 1V to 5H: 1V to allow trash to slide up the rack with rising water level – the slower the approach flow the flatter the angle.

The bar opening space for small pipes should be less than the pipe diameter. For larger diameter pipes, openings should be 6-inches or less. Alternate debris trapping methods can also be used upstream of trash racks using pipe or chain safety net.

The control for an outlet or pipe should not shift to the grate, nor should the grate cause the headwater to exceed the design elevations. Therefore, head loss through the grate should be calculated.

8.9 Energy Dissipation

The outlets of pipes and lined channels are points of critical erosion potential. Stormwater that is transported through man-made conveyance systems at design capacity generally reaches a velocity that exceeds the capacity of the receiving channel or area to resist erosion. To prevent scour at a stormwater outlet, protect the outlet structure and minimize potential for downstream erosion, a flow transition structure is needed to absorb the initial impact of flow and reduce the speed of the flow to a nonerosive velocity.

Energy dissipaters are engineered devices such as rip-rap aprons or concrete baffles placed at the outlet of stormwater conveyance for the purpose of reducing the velocity, energy and turbulence of the discharged flow.

- Erosion problems at culverts, pipe and engineered channel outlets are common. Determinations of the flow conditions, scour potential and channel erosion resistance shall be standards procedures all design.
- Energy dissipaters shall be engineered whenever the velocity of flows leaving a stormwater management facility exceeds the erosion velocity of the downstream

  area channel system.
- Energy dissipation design will vary based on discharge specifics and tailwater conditions

- Outlet structures should provide uniform redistributions or spreading of the flow without excessive separation or turbulence.

§ This chapter summarizes a broad range of general hydraulic equations and methods related to the design of sewer system facilities.

§ Manning's Equation is the primary analysis method for designing facilities that operate under open-channel conditions.

§ Use critical flow calculation methods to determine when and where subcritical and supercritical flow regimes exist in a system. Areas where flow transitions from one regime to another are potential areas requiring additional design study and analysis.

§ The HGL is established from a location where hydraulic control occurs. It may occur on the upstream or the downstream end of a sewer.

§ Closed conduits and open channel have different design criteria owing to their difference in material type and function.

§ Open channel types are classified as to the lining type. BES defines three types of open channel lining types: 1) vegetative 2) flexible and 3) rigid. Each type has different minimum and maximum velocity limitations.

§ When designing all closed conduits types apply a Manning's roughness factor of 0.013.

§ Open channels use a variety of Manning's roughness coefficients that depend on the lining material type.

§ There are a variety of primary outlet structures used to regulate flow throughout the sewer system. BES has defined analysis methods to design orifices, perforated risers, pipes and culverts, a variety of weir types and combination outlets.

§ BES limits the size of small diameter orifices to 2-inches to limit potential clogging and failure.

§ Secondary outlets serve to provide a controlled overflow path when flows exceed the maximum design storm for a facility. BES requires that all facility types consider a secondary outlet to direct flows where they will cause the least harm to property, and the public.

§ Trash racks and safety grates are important features to help ensure critical elements continue to operate over a range of flow conditions. Trash racks shall be designed to operate without interfering with a sewer's hydraulic capacity.

10 Index

Abandonment of Sewers, Manholes, Sumps and Structures 4-28
Blind Bends..... 4-4
Calculate Time Duration for Runoff to Reach a Point-of-Interest..... 6-25
Calculating Design Flows..... 5-5
Calculating Service Lateral and Mainline Inverts 5-14
City Maintenance and Limits of Responsibility516
City Of Portland Datum..... 3-10
Cleanouts - When and Where They Can be Used 4-27
Combined Sewers 3-4
Companion Documents..... 1-10
Computer Models for Drainage System Design 6-16
Constructing Sewers on Steep Slopes..... 4-34
Contingency Factor..... 5-5
Converting Average Flow Velocity into Travel Time *6-31*
Crossing between Sanitary Sewers and Water Lines..... 4-7
Deep Connection Riser (DCR) 5-18
Design Criteria..... 6-31
Design Criteria for Mainline Sewers 5-10
Design Criteria for Sewer Service Laterals.. 5-11
Diameter of Frames and Covers..... 4-26
Drainage Reserve..... 3-9
facility..... 1-21
Flexible Pipe Design..... 4-14
Flow Regimes 6-26
Geotechnical Investigations Requirements.. 3-10
Glossary 1-15
Hydrologic Length and Slope..... 6-25
Inside Manhole Drop Connection..... 4-23
Land Use and Surface Type..... 6-22
Manhole Channel Design..... 4-23
Manhole Depth Design.....4-26
Manhole Location and Design.....4-18
Manual Revisions 1-8
mapped impervious area (MIA).....6-22
Minimum Depth Determination 4-6
Net Developable Area 5-3
Open Channel Flow.....6-31
Pipeline Strength Design 4-10
Plan, Specification, Computation and other Requirements.....2-4
Project Service Life 1-19, 3-1
Public Sewer Easement Requirements 3-6
Public Works Permit Application Requirements 2-6
Rational Method 6-8
Rigid Pipe Design.....4-11
Santa Barbara Urban Hydrograph (SBUH) Method.....6-15
Service Requirements.....3-1
Sewer Separation.....3-2
Shallow Concentrated Flow.....6-29
Sheet Flow.....6-27
Site Hydrology - Physical Characterization..6-22
Soil Conservation Service (SCS) Hydrograph Method.....6-11
Soils.....6-23
Standard Pipeline Materials.....4-2
Storm Drainage Facilities.....3-3
Stormwater Management Manual (SWMM).1-6, 1-20, 6-1
Survey Requirements.....3-9
Types of Projects 2-1
Unit Wastewater Flow Rates.....5-4
Use of Standard Plans.....2-5
Useful Contacts.....1-1, 1-9, 3-3, 3-5
Variance Request.....2-8

Printed on recycled paper.